Assessment of the Communication Challenges of using Small Satellites for Interplanetary Missions

Zinom B.B (Zinomblessing@gmail.com)
Centre for Satellite Technology Development
Abuja Nigeria
Abdul Lawal (1004341l@student.gla.ac.uk)
University of Glasgow
United Kingdom

Abstract

The primary goal of most interplanetary mission is deep space exploration by way of gathering data on other existing celestial bodies or deep space environment in general. When compared to terrestrial and Satellite communications, interplanetary communications presents a more challenging environment for Space-to-Earth data communication. The constraints encountered by a typical Radio Frequency link used for interplanetary communications includes long range of transmission, asymmetric bandwidth, high signal propagation delays, very low signal-to-noise ratio and high data corruption rates. For small satellites, getting a communications subsystem that meets the desired mission requirements in terms of power and data rate is a daunting task. To this end, this paper discusses two main key technologies and the important roles they play for interplanetary communication. The technologies are appraised from conducting analysis of the communication channel structure, with focus on the communication channel coding and the modulation and demodulation of data assuming communication between the Moon and earth. Furthermore, the work suggests various criteria such as power requirements, antenna size and frequency, to be considered when designing a communication subsystem for a small satellite for interplanetary missions.

Keywords: - Communication Channel, Communication Challenges, Communication Link, Correction Techniques, Small Satellites, Interplanetary Missions.

1. Introduction

Interplanetary missions are defined as missions where the orbits are way above the geostationary orbit (above 36,000 km), it also encompasses orbits around the moon. Most organization specifically space agencies such as ESA, NASA, National agencies of Russia, China etc have and are still venturing into series of interplanetary mission for deep space explorations.

Contemporary and upcoming interplanetary missions have basically two important targets:-

- To acquire useful and thorough data by several measurements.
- To transmit the acquired data to the earth through several receiving stations for analysis by Scientist.

In other to acquire these data in excess to achieve set mission objectives the communication link has a lot of play. The communication of all intended interplanetary mission solemnly depends on the Radio frequency link (Systems). Transmission of data/information in deep space, particularly for interplanetary range missions is a very challenging task. Limitations such as signal propagation delay, high channel error characteristic, asymmetric bandwidth availability and other effects due to planetary orbital dynamics with also antenna scheduling challenges on earth receiving stations occurs.

Communication of available data to and fro the satellite for several planets like the moon, is of great challenge as the stated limitations above immensely affects the communication link of the entire system.

In present day small satellites technology is fast encroaching the whole spacecraft/Satellite industry, as miniaturization and constellation designs for satellites has become the other of the day, small satellites mission will increase the prospects of small satellites for interplanetary missions. But when it comes to interplanetary missions, Small Satellites experience great challenge as a result to size, Mass, Power system, Propulsion system, Communication System etc. The communication System design of a spacecraft is of great importance to the spacecraft engineer to enable him/her achieve the set mission objectives of the spacecraft mission.

In digital communications two correction techniques are broadly usually applied to digital signals/data depending on the type of expected error or choice. Other transmission mechanisms are also used alongside in other to tackle issues as regards impairments that affect signals when transmitting and receiving the carrier signal.

This paper highlights a communication system (channel) design, simulated using MatLab simulink Blocks to analyse Bit Error Rate (BER) as it's a key factor for good Quality of Service (QOS). The communication channel design includes channel mechanisms at the transmitter, like Scrambler, Reed Solomon encoder, Convolutional encoder, Interleaver (Matrix), Modulation (BPSK), A Rician fading channel, AWGN and at the receiver, Demodulator (BPSK), De-interleaver (Matrix), Viterbi decoder, Reed Solomon Decoder and a Descrambler.

2. Communication Challenges for Interplanetary Missions

Typically the challenges of an interplanetary mission are centred on the transmit and receive path of the communication system. The basic challenges that affect the link are:-

- Long range of transmission
- Asymmetric bandwidth
- High signal propagation delays
- Very low signal-to-noise ratio
- High link and data corruption rates for radio-frequency (RF) communication channels structure
- Power, mass, size, and cost constraints for communication hardware and protocol design.

3. Moon To Earth Communications

Communication to the moon and fro has been a great challenge as present missions generate a high amount of data, whereas expected planned missions will generate even more lager data, which will be a great challenge on the link design of any communication system since the expected characteristic of missions to the moon are to downlink high data rates, make sure there are no outages in the link, direct moon to earth link communication, Continuous utilization of Ka-Band etc. A few features of interplanetary missions coupled with their link design are shown in Figure 1.

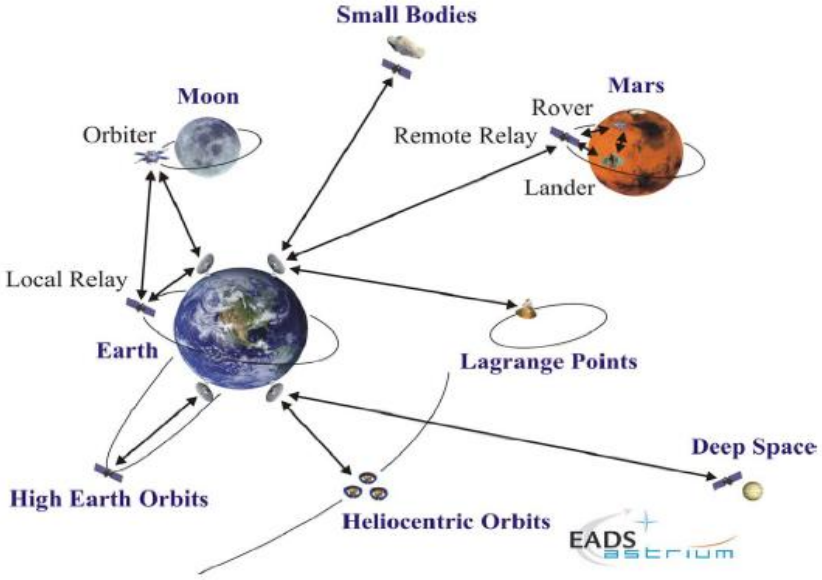

Figure 1. Interplanetary mission with link architecture

The quality of information acquired after a link communication between the moon and the earth is enhanced by an appropriate vetting and processing of the transmitted and received data. Basically communication exist between astronauts with the earth using a rover downlink, also there could be video capacity download to earth depending on the type of mission. Scientific payloads will also need high data communication with the earth.

The communication system design for missions between the moon and the earth must be holistic. The system must be fault tolerant and reconfigurable even in the mist of errors it should be flexible. The Consultative Committee Space Data Systems (CCSDS) advance Orbiting Systems (AOS) Standard makes available the required flexibility and programmability.

When interplanetary missions are targeted for communication, several limitations emerge and are considered in the communication link architecture. Limitations in transmission time between the earth to the moon and vice versa due to the distance (approximately 350,000km) in altitude which sums up to 2.4 seconds, also there are shortcomings in the fact that the moon is evident only up to almost 12 hrs a day. The moon experience a huge challenge in communication as it tends to cover the earth since its south pole is aimed for human habitat and explorations; it is out of sight from the earth during the 28 day lunar cycle and will have to use lunar relay satellites for those periods of lost sight from the earth. With these limitations, the availability for telephone circuit and other functions where there is a need for quick response will basically not be visible.

The moon will also block the transmission of useful bandwidths since it is a reflector.

Therefore to achieve a functional bandwidth and an acceptable Signal to noise ratio for any communication, a large antenna with high directivity is required at the receiving station and also a holistic and satisfactory channel design must be put in place.

This paper considers a communication channel structure design using MatLab Simulink Blocks and assuming a channel with AWGN.

4. Communication System Channel Structure

For every digital communication System channel structure the aim is to design an architecture that withstands any kind of impairments that might affect the link both in the transmit and receive path. For interplanetary missions, the distance is of much concern so also the expected errors that affect the link will be high, which makes a good channel structure architecture an almost solution to any communication challenge for interplanetary missions. According to Shannon limit, the minimum value of $\boldsymbol{E_b/N_o}$ bellow which signal transmission can be free of error as $\boldsymbol{C/B}$ tends to zero is equal to$\boldsymbol{-1.59\,db\,(1/log_{2e})}$. Generally most communication systems are limited by the availability of bandwidth and power. So if the signal power Can be minimised and the same standard of service is sustained it will be of great significance. But it can only be attained by introducing redundant bits to the data by a channel coder. in cases like this there are two main types of coders that are implemented: Block encoders and Convolutional encoders. The additional bit at the transmitter are use to detect the introduce errors by the channel in the structure.

To this note, basically there are two major correction technologies used in digital communication for error correction, which can also be applied to interplanetary missions communication channel architecture:-

- **Forward Error Correction (FEC)**

  The FEC is a type of error correction technique where errors are detected and normally corrected at the receiver. The main reason for forward error correction on a communication channel it's to minimise the amount of power required to achieve a particular error rate. It is made up of Block Codes and Convolutional Codes.

  Convolutional codes can be referred to as codes that carry out convolution of the input information with the encoder's impulse response. It is created by tapped- shift register including two or more modulo adders. The quantity of Data/bits reserved in the shift register is referred to as Constraint Length denoted as, K as the bits are shifted within the register by the constrain length K. Convolutional Codes might be re-cursive of non – recursive and systematic or non systematic. The efficiency of the Convolutional code is limited by the constraint length K. Longer constraint length is proven to meet up with Shannon limit with maximum likelihood (Viterbi) decoding, as the constraint length increases the complexity with K. Convolutional codes when decoded with viterbi almost eliminates the errors by increasing signal to noise ratio. Code synchronization is quick and easy when compared with other block codes.

  Both space and terrestrial mobile Communications has adapted Convolutional codes as they have been widely use and been successful in a lot of missions carried out by NASA, like the Hubble space Telescope and voyager. It has been used also on mars pathfinder and Cassini. Though with a complex decoding and a longer constraint length of 15 (K=15) for greater execution of data from deep space.

  Block Codes: - Block codes are either linear codes or cyclic codes. The Linear codes are normally binary and they are given in the form of *(n,k),*where *k* is the number of bits converted to n code word bits. As well the difference of *n* and *k* describes the number of redundancy check bits, *r*, that are added to the coder.

  Cyclic codes are normally a subclass of linear codes. But for cyclic the code word is acquired by performing a cyclic shift on its successor. For example every bit in a code sequence generation is

shifted to the next step on the right till the end bit which is then feed back to the beginning of the sequence. Linear Hamming and extended Golay codes are also linear code generators.

Bose Chaudhuri Hocquenghem and Reed Solomon (BCH & RS) are the most widely used cyclic Codes.BCH is the most strongest of cyclic codes while RS is best for correcting the effects caused by burst errors. RS codes are specifically considered in mobile satellite channels. They are subsets of BCH codes.

Reed Solomon Codes are non binary systematic codes. They are expressed as RS (n, k), given, n as the symbol code word length and k is the number of information symbols of s-bits. The difference of n and k is the number of parity symbols added to the information. Every of the information symbol is achieved from multiple bits. An RS code detects up to (n, k) error information symbols. Or will be able to correct about (n, ke)/2 error information symbols.

The minimum distance of an RS code is given by:-

$$d_{\min} = (n - k) + 1$$

RS codes are maximum distance separable and there maximum length in bytes is given by $2^s - 1$. Which means if an 8bit symbol is used; the maximum length of the RS code will be 255 bytes. The RS (255,223) code is the most widely used RS code in satellite communication. RS coders and decoders are of low complexity and can be applied in hardware at a very high data rate codes.

RS codes sounds like the best codes for error correction but it performs very inadequate on some important channels like the white Gaussian noise (AWGN) channel. But it will perform great when concatenated with, let's say a Convolutional code.

- **Automatic Repeat Request (ARQ)**

  Where a great amount of reliability of the data is necessary and the issue of latency is of less significance. The ARQ make availability for FEC where the error correction is not fully achievable due to the wrong response of the code word. The ARQ basically is a re-transmission protocol that notifies the transmitter when a transmitted code sequence was properly received or not. Now the problem comes if the information was not properly received, a request for re- transmission will be sent for notification with the use of a return channel. Normally the amount of information re-transmitted is decided by the type of ARQ chosen by the network. As we have three classes of ARQ protocols which are as follows:-

  I. Stop and wait
  II. Continuous ARQ with repeat (go-back-N ARQ)
  III. Continuous ARQ with selective repeat

  All the different classes of ARQ protocols functions in different ways.

Both the FEC and ARQ techniques are applied selectively depending on the expected error and the architecture of the communication channel.

In Satellite communication and deep space missions like interplanetary missions where systems has to function at low E_b/N_o, Concatenation of coding is always the perfect option. Concatenation coding takes place when two different type of coding techniques come together to create a larger code.

Concatenated coding technique will normally make use of a Convolutional encoder of a particular constraint length with viterbi decoding as the inner design and then Reed Solomon block coding with decoding as the outer design on the communication channel structure design.

Deep space mission also accommodates turbo coding as its performance is said to be better than concatenated code as regards its approach to Shannon limit. Turbo codes are achieved by employing two recursive systematic Convolutional (RSC) codes generators which are concatenated in parallel.

5. Concatenated Channel Structure Design

In this paper the communication channel structure was designed with MatLab Simulink blocks. FEC technique for error correction is adopted and concatenation (Both Block Code and Convolutional Code) of coding has been applied to the communication channel link architecture. Other channel mechanisms like Scrambler, De-scrambler, Interleaver, De-interleaver, Modulation, Demodulation etc. where also introduced in the channel structure from MatLab Simulink.

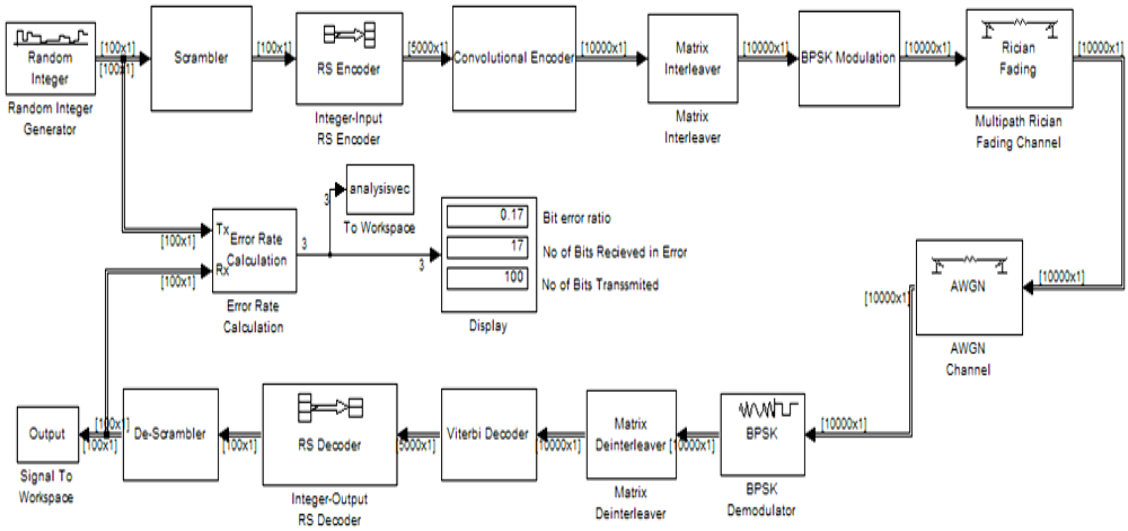

Figure 2. Channel Structure Design with Matlab Simulink Blocks

6. Design Methodology

The channel structure in Figure 2, Shows a serially concatenation of codes with other mechanisms that builds up the channel structure. All mechanisms where employed from MatLab simulink (Communication Blockset, Signal Processing toolbox, Control System toolbox and Simulink Blockset).

In the Channel structure signals (bits) were passed through a random integer generator which consistently distribute random integers in the range [0, *M*-1], the distributed bits are then scrambled by a scrambler in other to minimise the duration of strings of 0s and 1s in the transmitter, as longer strings of 0s and 1s cause transmission synchronization issues in the system, Also at the receiver, the inverse of the scrambling process is done (Descrambling). Both scrambler and descrambler are in the form of a pseudorandom sequence.

After scrambling the input signal, the bits get coded by an outer Reed Solomon integer encoder and an inner Convolutional encoder, while at the receiver the input signal is decoded by a Maximum Likely hood Viterbi decoder as an inner decoder and an outer Reed Solomon Integer Decoder respectively. After the input signal is coded it is then interleaved. Interleaving in digital communications is basically a process that promotes the execution of the Convolutional encoder with respect to burst errors. The incoming bits from the Convolutional encoder are randomly divided to separate bits that might cause the link to be burst. The reverse of interleaving is done at the receiver as well (de-interleaver). Other channel mechanisms like the BPSK modulation /de-modulation is used, as it is of a Phase Shift Keying (PSK) type which requires less power requirement to attain bit error rate functionality on the channel link. Also a Rician fading channel and an Additive white Gaussian Noise (AWGN) channel were introduce into the channel structure for further analysis.

7. RESULTS AND ANALYSIS OF SIMULATION

The simulink model of the communication channel structure was simulated and some values were obtained with an error calculation block. Values of Bit error ratio, Number of received bits in error and Number of transmitted bits where all displayed. Changes where effected on both the Rician and AWGN channels to acquire some useful values like the bit error ratio, the k factor (Line of sight factor) which was alternated with values from 1:10 respectively with fixed values of signal to noise ratio (E_b/N_0) ranging from 5: 5: 50 for further analysis on the behaviour of the errors when changes where effected on those parameters.

The following values where realised in Table 1 below.

Table 1. Structure Analysis Values

Signal to Noise Ratio ($\boldsymbol{E_b/N_0}$)	K Factor	Bit Error Ratio
5	**2**	**0.43**
10	**6**	**0.42**
15	**5**	**0.40**
20	**2**	**0.42**
25	**2**	**0.43**
30	**1**	**0.43**
35	**1**	**0.41**
40	**9**	**0.36**
45	**5**	**0.14**
50	**3**	**0.17**

From the table above it means that the channel structures Bit error ratio is best when a K factor of 3 is simulated with a signal to noise ratio of 50dB. The analyses were taken based on an input stream of 100 bits fed into the system through an integer input generator block in simulink.

Further, an analysis using the bertool in Matlab was carried out with a stream of 100bits been encoded at the transmitter and decoded at the transmitter. The 100 stream of bits was streamed in the channel structure model

with a k factor of 5 at a signal to noise ratio of E_b/N_0 = 45dB, the bits yielded 14 bits in error with a Bit error ratio of 0.14.

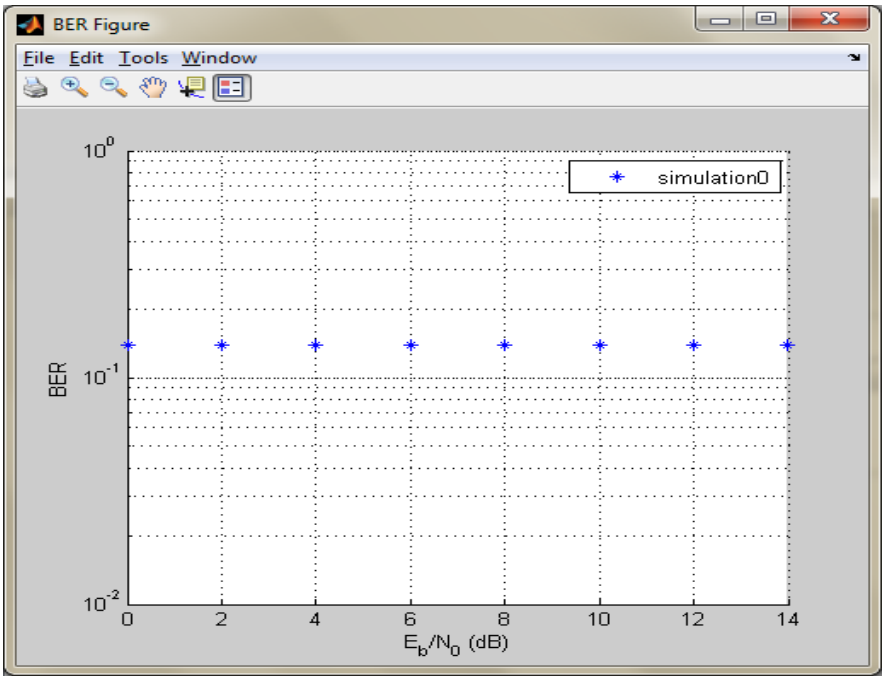

Figure 3. BER over E_b/N_0) for the channel Structure

Analysis on the modulation schemes were taken to check which one was suitable for the channel structure. PSK (BPSK) was best for this channel structure design though no trade off with other parameters were carried but it resulted with a better bit error ratio.

8. Further Study

Future space interplanetary missions will definitely put a lot of constraints on the communication links when it comes to data rates, bandwidth etc. So further analysis will be carried with new trends in technology, design etc to acquire higher data rates. Extensive study and implementation of higher coding techniques including hybrid ARQ techniques will be considered to eliminate challenges on high data corruption rates. Presently the Consultative Committee for Space Data Systems (CCSDS) suggest low – order schemes for modulation like binary or quadrature phase-shift keying (QPSK) and offset quadrature phase shift keying (OQPSK). But regardless some higher modulation scheme will be used for future missions which has also been proposed like the 8-PSK, 16-APSK (amplitude-phase-shift keying)
and 32-APSK.

References

[1] A. Rathke, C. Jentsch and O. Wallner, "Drivers Fo Future Interplanetary Communication and Navigation," *presented at the Presented at the Aerospace Applications Conference*, 2009.

[2] B. Zinom, "Simulation Of Imarsat Standard C Channel," MSc, School of Engineering, Design and Technology, University Of Bradford, Bradford, 2012.

[3] R. E. Sheriff and Y. F. Hu, *Mobile Satellite Communication Networks*. Bradford: JOHN WILEY & SONS,LTD, 2001.

[4] C. Caini, V. Fiore "Moon To Earth DTN Communications Through Lunar relay Satellites,"Advance Satellite Multimedia Systems Conference" September 2012.

[5] D.M Boroson, "Interplanetary Deep Space Optical Communications Systems & CTechniques," Invited Presentation.

[6] W.F Sampson"Maximum Utilization of Narrow - Band Data Links for Interplanetary Communciations," *Proceedings of The IRE*

[7] T. De cola, H Erst, M. Marchese "Achieving High Goodput Performance in Mars Missions Through Application Layer Coding 7 Trasmission Power Trading,".

[8] A. Rathke, C. Jentsch and O. Wallner."Interplanetary Communication: A Review Of Future Missions," Germany.

[9] D.Mishra, S. Jit, and K.S Dasgupt,"Hybrid Concatenated Convolutional Code for Deep Space Mission'' In *Iternational Jornal Of Computer Applications,,June 2012*.

[10] R. Liyanapathirana and H. C. Wiratno, "Coding and modulation for mobile satellite systems," in *Electrical and Computer Engineering, 1997. Engineering Innovation: Voyage of Discovery. IEEE 1997 Canadian Conference on*, 1997, pp. 94-97 vol.1.