ASSESSMENT OF COMMUNICATION CHALLENGES USING SMALL SATELLITES FOR INTERPLANETARY MISSIONS

Presented By
ZINOM B.B
Centre For Satellite Technology Development
And
Abdul Lawal
University of Glasgow

Outline

- Introduction
- Communication challenges
- Communication Channel Structure Design
- Analysis/Result(Matlab Simulink)
- Further Study
- Conclusion
- Reference

Introduction

❖Interplanetary missions are defined as missions where the orbits are way above the geostationary orbit (above 36,000 km), it also encompasses orbits around the moon.

❖ Most organization specifically space agencies such as ESA, NASA, National agencies of Russia, China etc have and are still venturing into series of interplanetary mission for deep space explorations.

❖There are two important targets:-

- To acquire useful and thorough data by several measurements.
- To transmit the acquired data to the earth through several receiving stations for analysis by scientist

Communication Challenges

- The communication of all intended interplanetary mission solemnly depends on the Radio frequency link (Systems).
- General challenges of Interplanetary Communications includes:-
  - Signal propagation delay
  - High channel error characteristic
  - Asymmetric bandwidth availability
  - Effects due to planetary orbital dynamics
  - Also antenna scheduling challenges on earth receiving stations occurs
  - Power, mass, size, and cost constraints for communication hardware and protocol design.
- When interplanetary [illegible]ons are targeted for communication, for example for the moon. Limitatio[illegible] in the
  - Transmission time between the earth to the moon and vice versa due to the distance (approximately 350,000km) in altitude.
  - Also there are shortcomings in the visibility of the moon, almost 12 hrs a day.

Communication Channel Structure Design

- In digital Communications two technologies /techniques :-
  - Forward Error Correction (FEC)
    - For correction of errors basically at the receiver.
    - Minimises the amount of power required to achieve a good error rate.
    - Comprises of :-

      Block codes (Cyclic or Linear)

      Convolutional codes.
  - Automatic Repeat Request (ARQ)
    - A n availability for FEC if errors are not fully corrected
    - A re-transmission protocol
  - ARQ Consist of :-
    - Stop and wait
    - Continuous ARQ with repeat (go-back-N ARQ)
    - Continuous ARQ with selective repeat

Communication Channel Structure Design

- For every communication channel design the main objective is to receive much amount of data to enable further analysis and as a whole achieve the set mission objectives.
- Since most of the data are affected by several space impairments a holistic channel structure design that accommodates all the expected errors that comes with the data is required to counter most Communication challenges.
- Concatenation Code has been adopted in the channel structure design to achieve a higher bit error rate which is of utmost important to counter challenges.

Communication Channel Structure Design

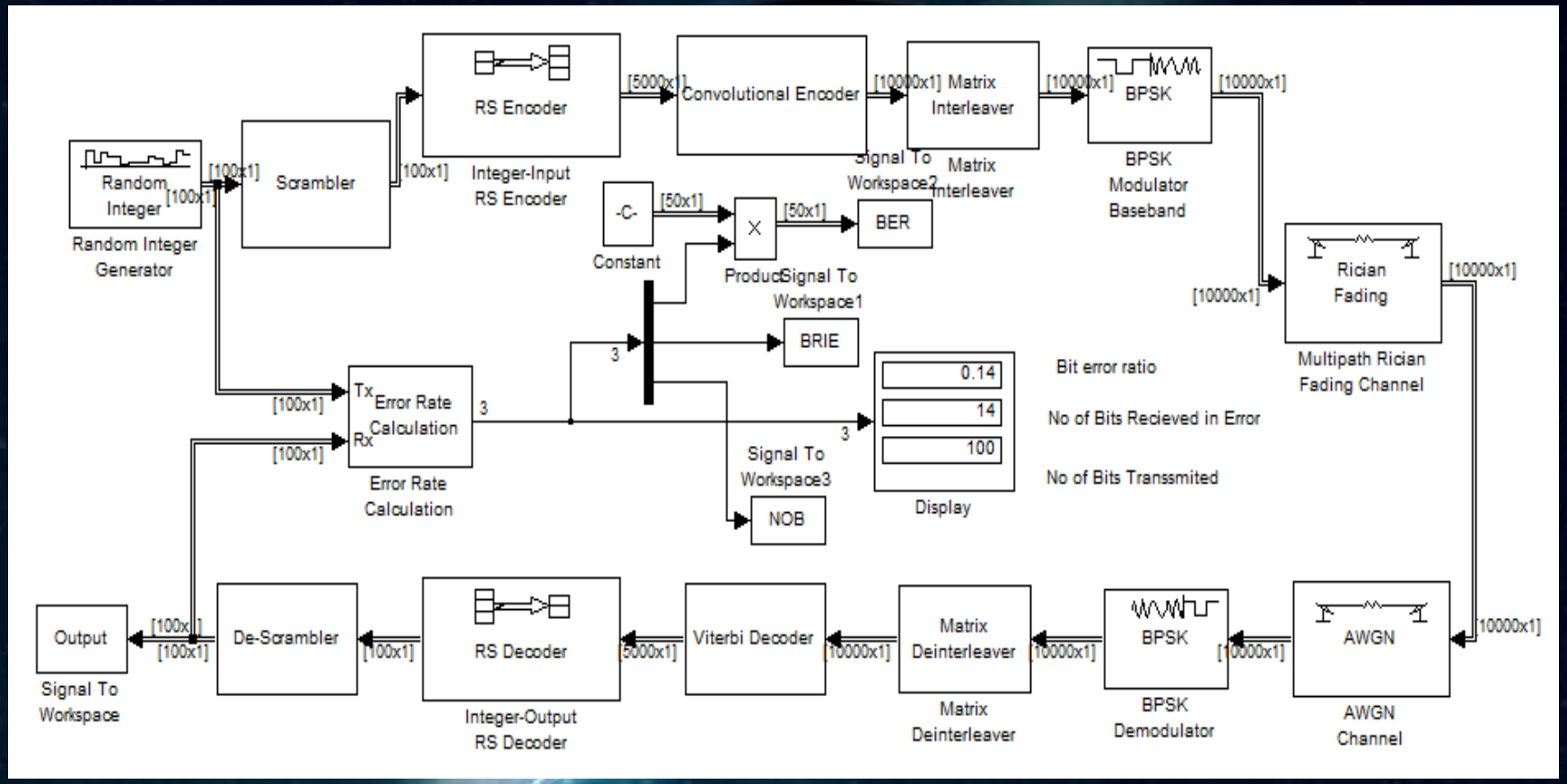

MatLab Simulink Design of the Communication Channel Structure

Results/Analysis

- Analysis for bit error ratio with signal to noise ratio and the K Factor
- Analysis was based on:-

  Eb/No = 0:5:50

  K Factor = 0:1:10

Signal to Noise Ratio (E_b/N_0)	K Factor	Bit Error Ratio
5	**2**	**0.43**
10	**6**	**0.42**
15	**5**	**0.40**
20	**2**	**0.42**
25	**2**	**0.43**
30	**1**	**0.43**
35	**1**	**0.41**
40	**9**	**0.36**
45	**5**	**0.14**
50	**3**	**0.17**

Conclusion

- Communication challenges with small satellites is achievable depending on the structure of the communication channel design for specific services.
- Also interplanetary communication challenges in the RF link can be reduced with concatenation of coding in a communication channel structure.

Further Study

- Future space interplanetary missions will definitely put a lot of constraints on the communication links when it comes to data rates, bandwidth etc.
- So further analysis will be carried with new trends in technology to design and acquire higher data rates.
- Extensive study and implementation of higher coding techniques including hybrid ARQ techniques will be considered to eliminate challenges on high data corruption rates.
- Further study will be done to analyze a real time scenario with specific data for an interplanetary mission
- STK software will be used for analysis as regards Power, Mass, Range etc.

References

[1] A. Rathke, C. Jentsch and O. Wallner, "Drivers For Future Interplanetary Communication and Navigation," *presented at the Presented at the Aerospace Applications Conference*, 2009.

[2] B. Zinom, "Simulation Of Imarsat Standard C Channel," MSc, School of Engineering, Design and Technology, University Of Bradford, Bradford, 2012.

[3] R. E. Sheriff and Y. F. Hu, *Mobile Satellite Communication Networks*. Bradford: JOHN WILEY & SONS,LTD, 2001.

[4] C. Caini, V. Fiore "Moon To Earth DTN Communications Through Lunar relay Satellites, "Advance Satellite Multimedia Systems Conference" September 2012.

[5] D.M Boroson, "Interplanetary Deep Space Optical Communications Systems & Techniques," Invited Presentation.

[6] W.F Sampson"Maximum Utilizat[illegible] - Band Data Links for Interplanetary Communciations," *Proceedings of The IRE.*

Thank You For Listening!

Any Questions?