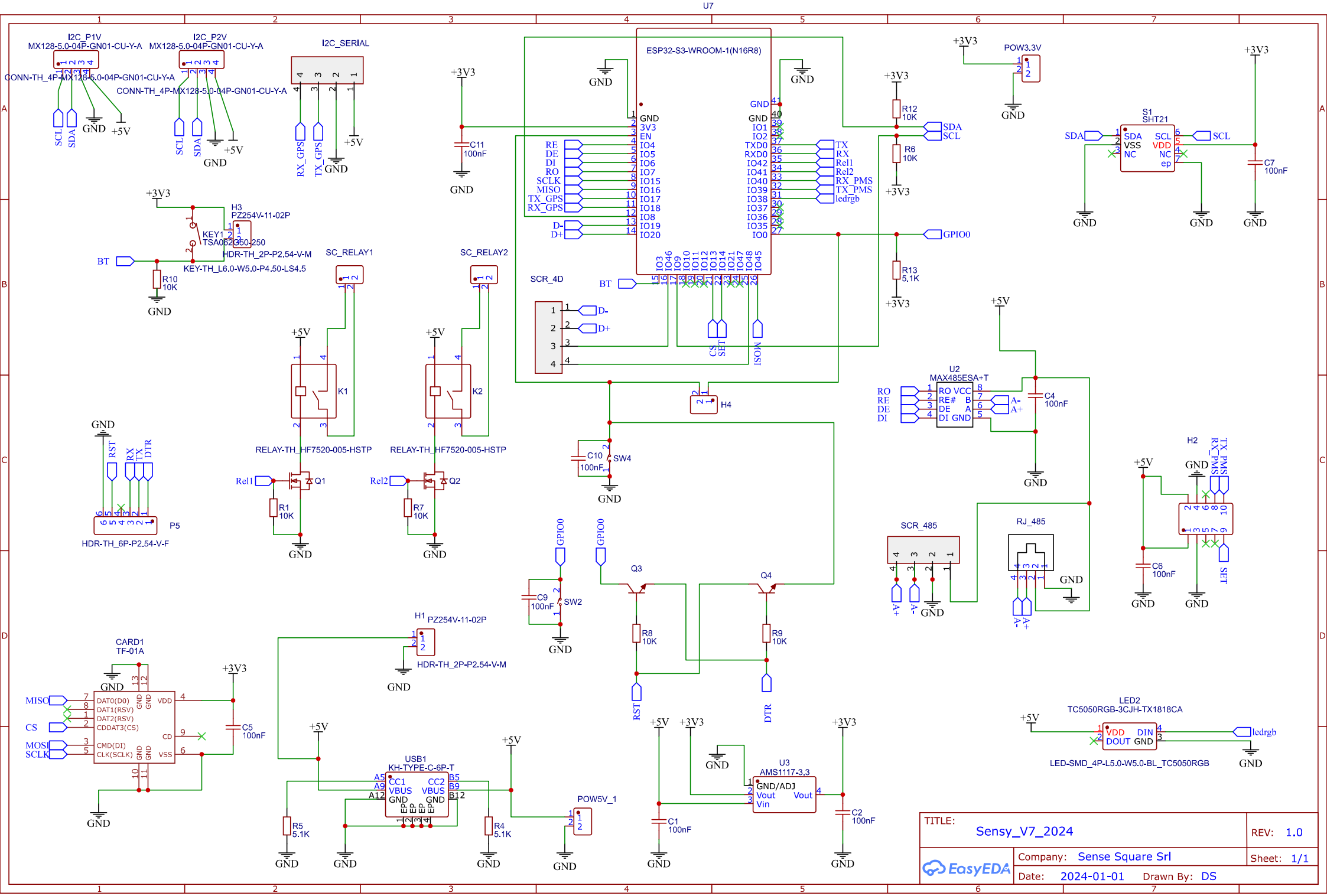
U7
ESP32-S3-WROOM-1(N16R8)
I2C_P1V
MX128-5.0-04P-GN01-CU-Y-A
I2C_P2V
MX128-5.0-04P-GN01-CU-Y-A
CONN-TH_4P-MX128-5.0-04P-GN01-CU-Y-A
I2C_SERIAL
SCL
SDA
GND
+5V
RX_GPS
TX_GPS
+3V3
C11
100nF
RE
DE
DI
RO
SCLK
MISO
TX_GPS
RX_GPS
D-
D+
TX
RX
Rel1
Rel2
RX_PMS
TX_PMS
ledrgb
GPIO0
R12
10K
R6
10K
R13
5.1K
POW3.3V
S1
SHT21
VSS
NC
VDD
ep
C7
100nF
H3
PZ254V-11-02P
KEY1
TSA062350-250
HDR-TH_2P-P2.54-V-M
KEY-TH_L6.0-W5.0-P4.50-LS4.5
BT
R10
10K
SC_RELAY1
SC_RELAY2
K1
K2
RELAY-TH_HF7520-005-HSTP
Q1
Q2
R1
10K
R7
10K
SCR_4D
CS
SET
MOSI
H4
C10
100nF
SW4
U2
MAX485ESA+T
RO
RE#
DE
DI
VCC
B
A
GND
A-
A+
C4
100nF
RST
RX
TX
DTR
P5
HDR-TH_6P-P2.54-V-F
H2
C6
100nF
SCR_485
RJ_485
C9
100nF
SW2
Q3
Q4
R8
10K
R9
10K
H1
PZ254V-11-02P
HDR-TH_2P-P2.54-V-M
CARD1
TF-01A
DAT0(D0)
DAT1(RSV)
DAT2(RSV)
CDDAT3(CS)
CMD(DI)
CLK(SCLK)
VDD
CD
VSS
MISO
CS
MOSI
SCLK
C5
100nF
USB1
KH-TYPE-C-6P-T
CC1
VBUS
GND
CC2
VBUS
GND
R5
5.1K
R4
5.1K
POW5V_1
C1
100nF
U3
AMS1117-3.3
GND/ADJ
Vout
Vin
C2
100nF
LED2
TC5050RGB-3CJH-TX1818CA
VDD
DOUT
DIN
GND
LED-SMD_4P-L5.0-W5.0-BL_TC5050RGB
TITLE:
Sensy_V7_2024
REV: 1.0
Company: Sense Square Srl
Sheet: 1/1
Date: 2024-01-01
Drawn By: DS
EasyEDA