REVISIONS				
ZONE	REV.	DESCRIPTION	DATE	DRAWN
	01	INITIAL DRAWING CREATED	5/16/2017	G. CARRARA

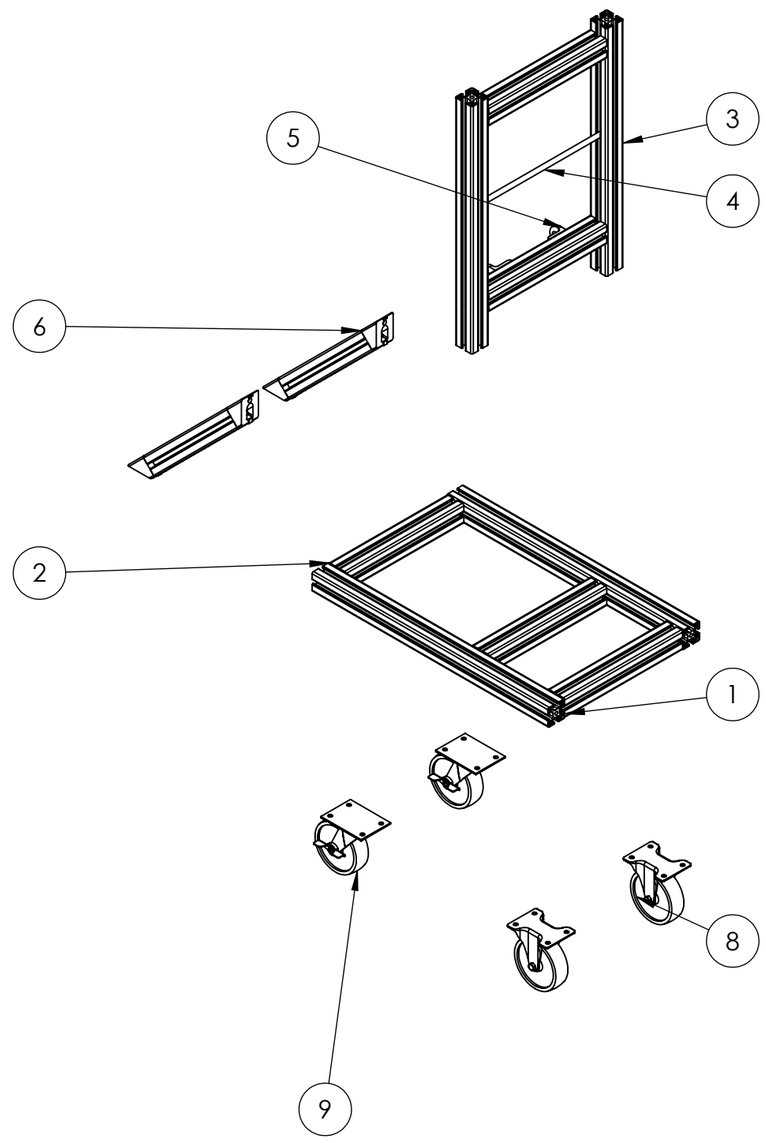

ITEM NO.	PART NUMBER	DESCRIPTION	QTY.
1	9903378-00	OFFBOARD CHARGER TESTER, 8020, 22IN	2
2	9903377-00	OFFBOARD CHARGER TESTER, 8020, 11IN	7
3	9903379-00	OFFBOARD CHARGER TESTER, 8020, 20IN	2
4	6649K136	HARDENED PRECISION STEEL SHAFT	1
5	5537T937	OFFBOARD CHARGER TESTER, 8020, BRACKET	2
6	5537T473	ALUMINUM T-SLOTTED FRAMING EXTRUSION	4
7	91251A198	BLACK-OXIDE ALLOY STEEL SOCKET HEAD CAP SCREW	2
8	2724T46	RIGID CART-SMART CASTER	2
9	2724T44	SWIVEL CART-SMART CASTER	2

ALTA MOTORS

THIRD ANGLE PROJECTION

THE INFORMATION CONTAINED IN THIS DRAWING IS THE SOLE PROPERTY OF ALTA MOTORS. ANY REPRODUCTION IN PART OR WHOLE WITHOUT PERMISSION IS PROHIBITED.

APPROVAL	NAME	DATE
DRAWN	G. CARRARA	5/16/2017
CHECKED		
ENG APPR.		
MFG APPR.		
Q.A.		

COMMENTS:

FILE NAME: 9903662-00

CAD GENERATED DRAWING. DO NOT MANUALLY UPDATE

INTERPRET GEOMETRIC TOLERANCING PER: ASME Y14.5-2009

UNLESS OTHERWISE SPECIFIED DIMENSIONS ARE IN MM.
TOLERANCES ARE:
DECIMALS X ± 1.0, .X ± 0.1, .XX ± 0.05
ANGLES ± 1°

DO NOT SCALE DRAWING

ALTA MOTORS
185 Valley Drive, Brisbane, CA 94005
415-230-0755

OFFBOARD CHARGER TESTER, FRAME

SIZE B | PART NO.: 9903662-00 | REV.

SCALE: 1:20 | 21476501.8g | SHEET 1 OF 1