REVISIONS				
ZONE	REV.	DESCRIPTION	DATE	DRAWN
	01	INITIAL DRAWING CREATED	10/06/2016	G. CARRARA

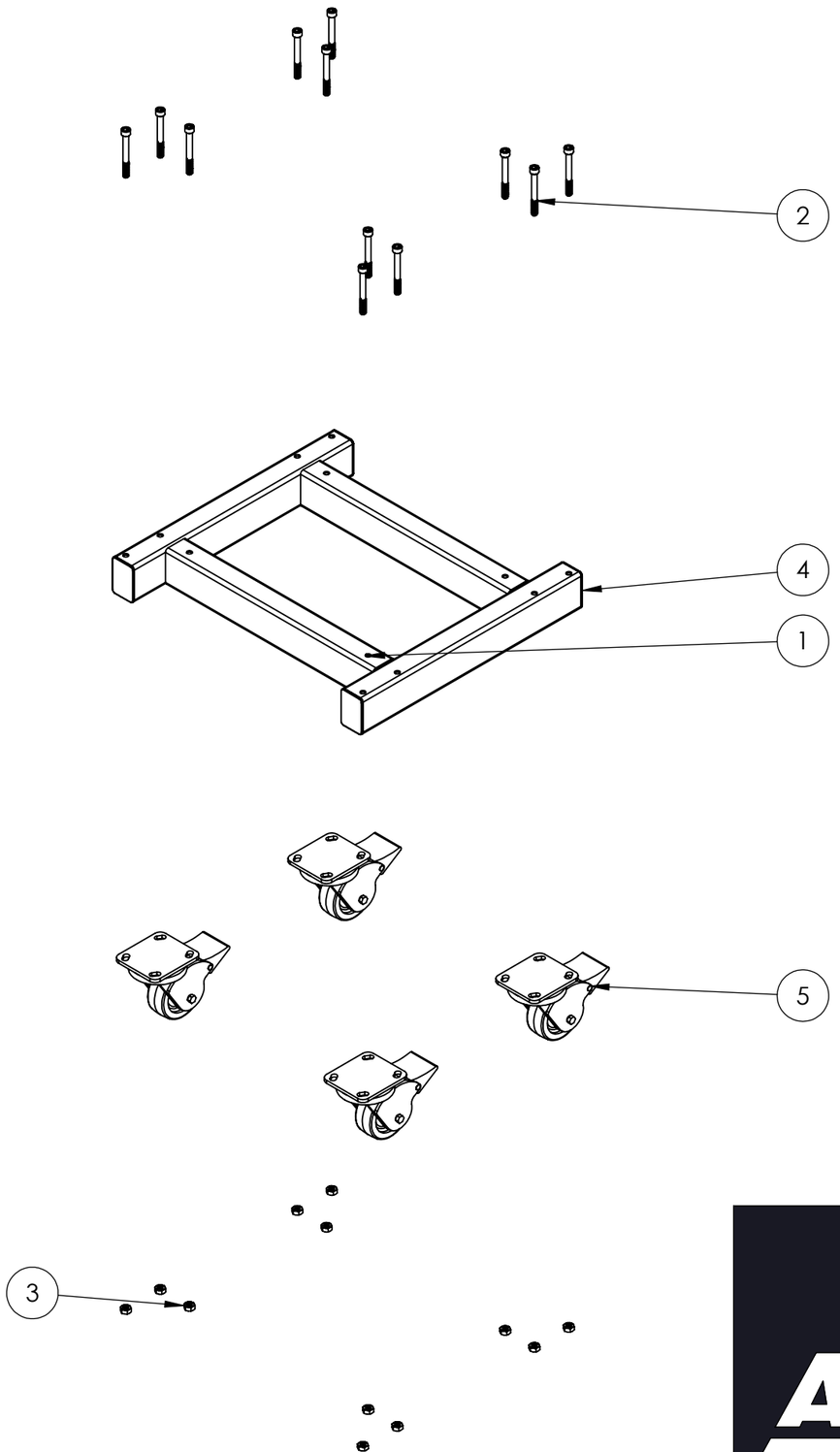

ITEM NO.	PART NUMBER	DESCRIPTION	QTY.
1	9902549-00	BASE, CART, MAIN LINE	1
2	91502A235	SCREW, SOCKET HEAD, M10X90	12
3	90591A171	NUT, M10	12
4	9902592-00	END CAP, FRAME RAIL, 2" X 3", BASE, CART, MAIN LINE	4
5	9UP4x2-S-TL	4" Swivel Caster - Polyurethane on Polyolefin Wheel- Model 9	4

ALTA MOTORS

THIRD ANGLE PROJECTION

THE INFORMATION CONTAINED IN THIS DRAWING IS THE SOLE PROPERTY OF ALTA MOTORS. ANY REPRODUCTION IN PART OR WHOLE WITHOUT PERMISSION IS PROHIBITED.

APPROVAL	NAME	DATE
DRAWN	F. LAST	10/7/2015
CHECKED		
ENG APPR.		
MFG APPR.		
Q.A.		

COMMENTS:

FILE NAME: 9902545-00

CAD GENERATED DRAWING, DO NOT MANUALLY UPDATE

INTERPRET GEOMETRIC TOLERANCING PER: ASME Y14.5-2009

UNLESS OTHERWISE SPECIFIED DIMENSIONS ARE IN MM.
TOLERANCES ARE:
DECIMALS X ± 1.0, .X ± 0.1, .XX ± 0.05
ANGLES ± 1°

DO NOT SCALE DRAWING

ALTA MOTORS
185 Valley Drive, Brisbane, CA 94005
415-230-0755

ASSEMBLY, BASE, CART, MAIN LINE

B SIZE | PART NO.: 9902545-00 | REV. 01

SCALE: 1:10 | 15938.5g | SHEET 1 OF 2