REVISIONS				
ZONE	REV.	DESCRIPTION	DATE	DRAWN
	01	INITIAL DRAWING CREATED	04/19/2017	G. CARRARA

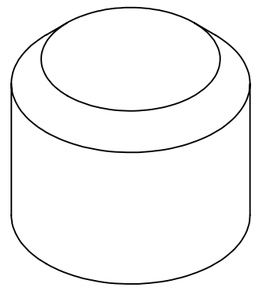

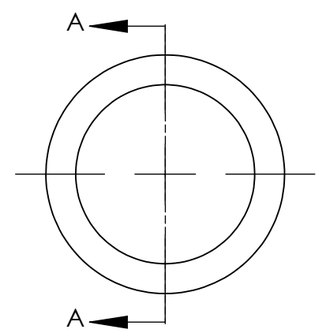

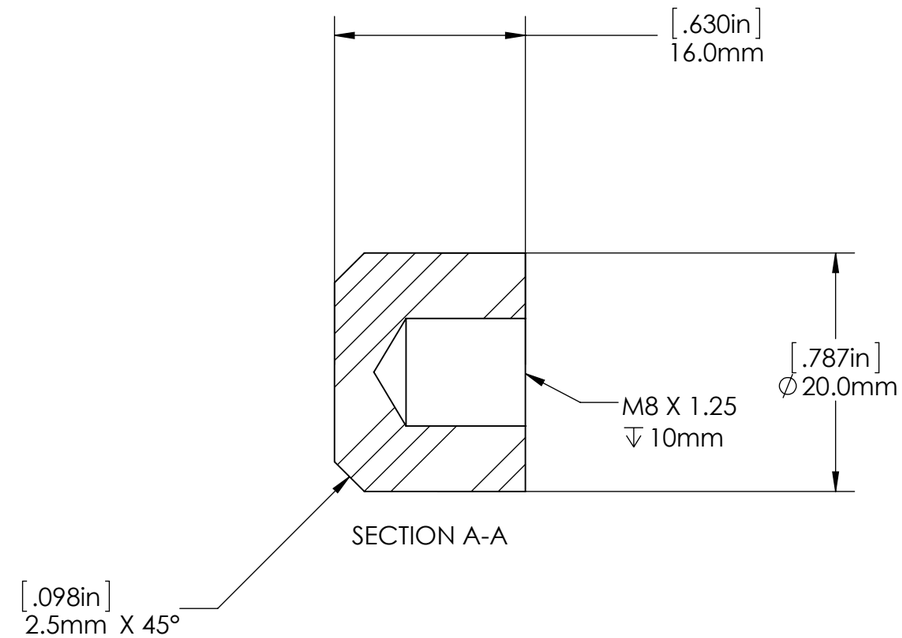

1. THIS PRINT IS A CRITICAL TO FUNCTION DRAWING. UNMARKED DIMENSIONS TO BE TAKEN FROM SUPPLIED CAD MODEL OF SAME PART NUMBER. DRAWING NOT TO BE REPRODUCED AND IS UNCONTROLLED WHEN PRINTED.
2. ALL MATERIALS REQUIRE ROHS COMPLIANCE
3. MATERIAL: **DELRIN** OR SIMILAR
4. FINISH: DEBURR AND BREAK ALL SHARP EDGES TO 0.1R MAX
5. CLEANLINESS: PARTS TO BE FREE OF DIE LUBRICANTS, OILS, METAL DEBRIS, MACHINING FLUIDS AND ANY OTHER CONTAMINANT THAT MAY AFFECT FUNCTION OR APPEARANCE.

ALTA MOTORS

THIRD ANGLE PROJECTION

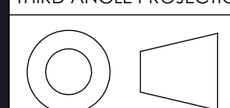

THE INFORMATION CONTAINED IN THIS DRAWING IS THE SOLE PROPERTY OF ALTA MOTORS. ANY REPRODUCTION IN PART OR WHOLE WITHOUT PERMISSION IS PROHIBITED.

APPROVAL	NAME	DATE
DRAWN	G. CARRARA	4/19/2017
CHECKED		
ENG APPR.		
MFG APPR.		
Q.A.		

COMMENTS:

FILE NAME: 7703608-00

CAD GENERATED DRAWING. DO NOT MANUALLY UPDATE

INTERPRET GEOMETRIC TOLERANCING PER: ASME Y14.5-2009

UNLESS OTHERWISE SPECIFIED DIMENSIONS ARE IN MM. TOLERANCES ARE:
DECIMALS X ± 1.0, .X ± 0.1, .XX ± 0.05
ANGLES ± 1°

DO NOT SCALE DRAWING

ALTA MOTORS
185 Valley Drive, Brisbane, CA 94005
415-230-0755

TOOL, MOUNTING, MOTOR, BUMPER

SIZE	PART NO.	REV.
B	PART NO.: 7703608-00	01

SCALE: 2:1 | 33224.4g | SHEET 1 OF 1