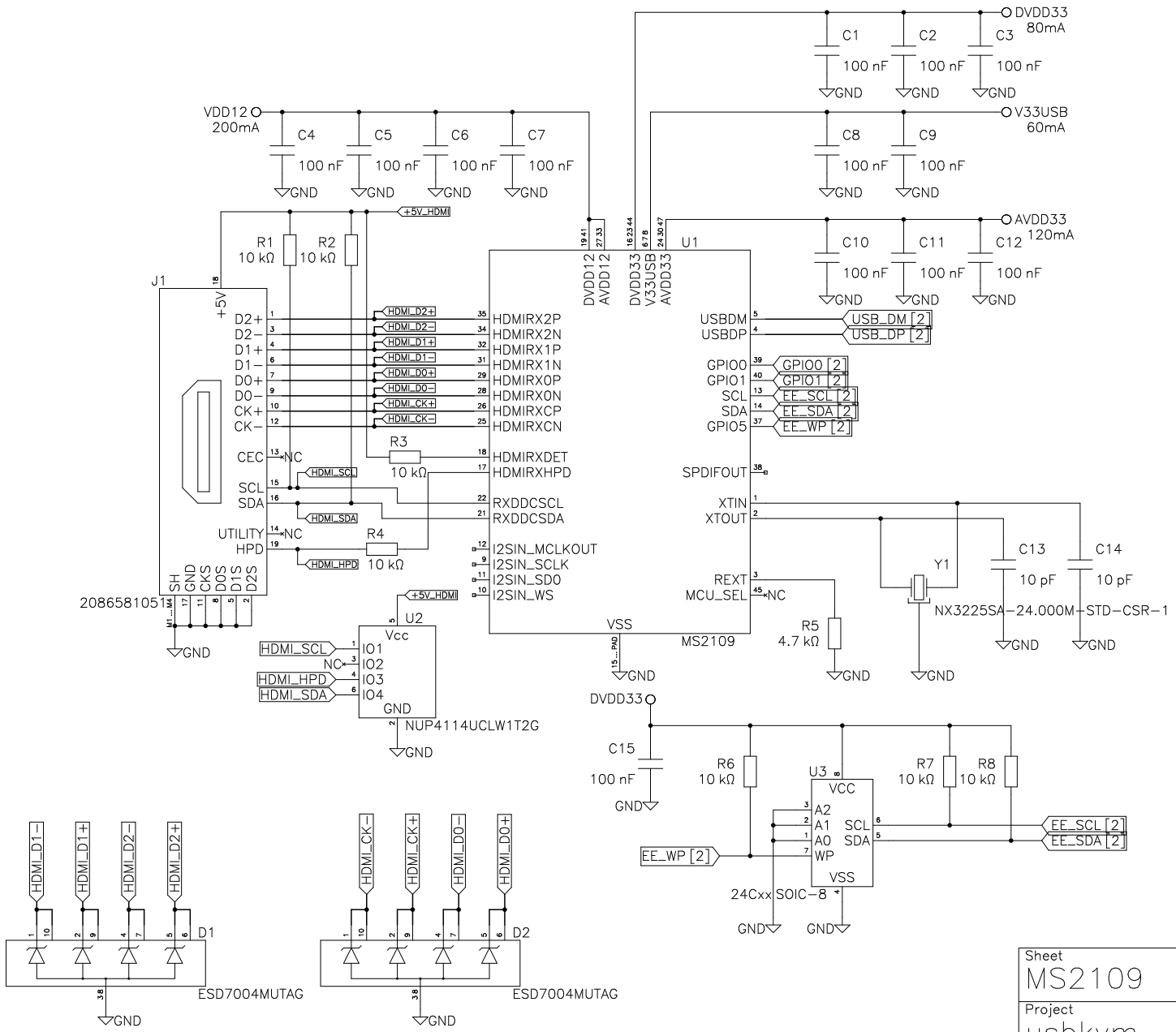

Sheet MS2109	Number 1/2
Project usbkvm	Revision 1
Drawn by Lukas K.	
Date 2024	

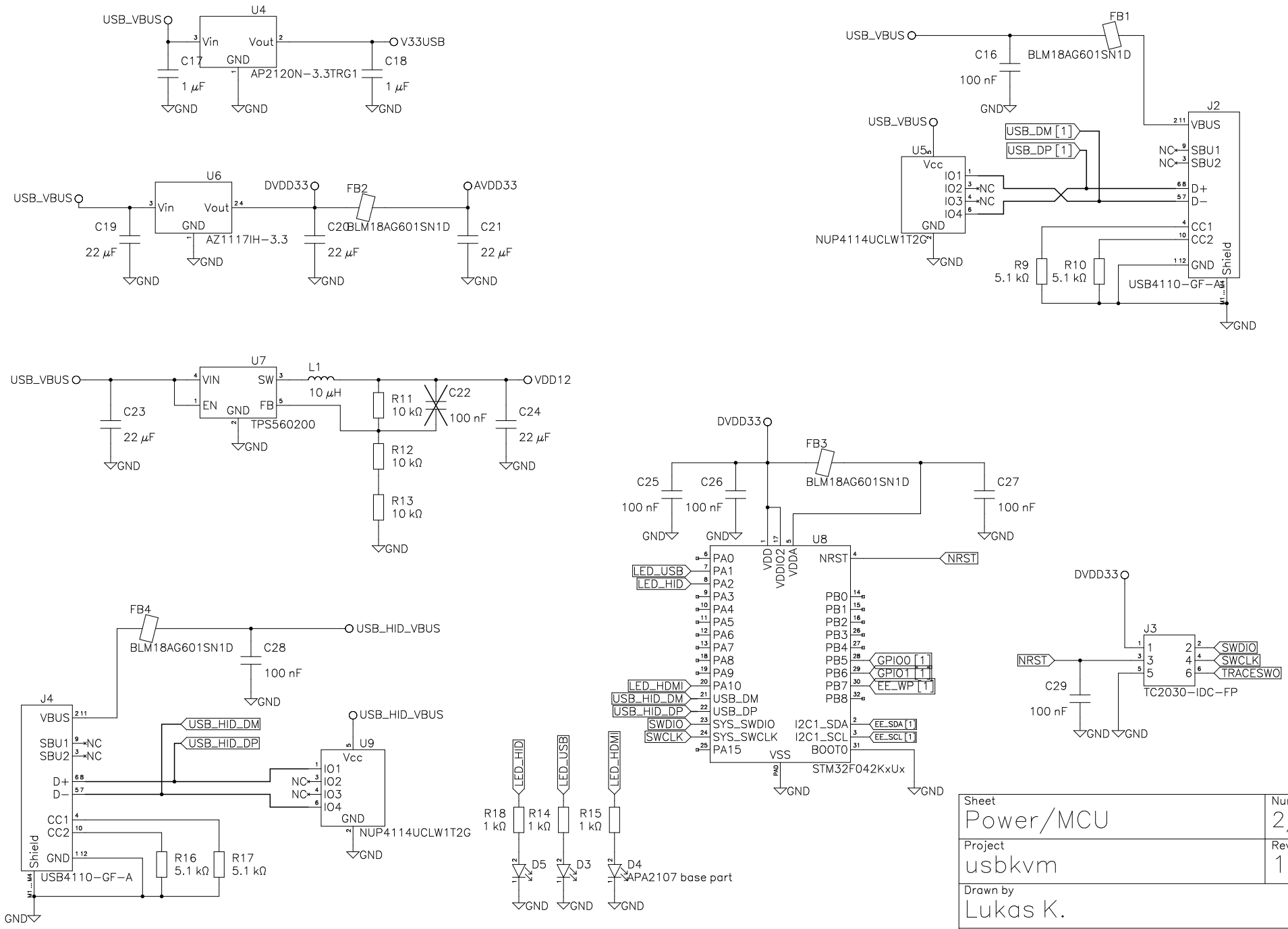

Sheet Power/MCU	Number 2/2
Project usbkvm	Revision 1
Drawn by Lukas K.	
Date 2024	