Topology Optimization of Drone Frame

Carter Brown

March 12, 2026

1 Objective

The objective of this optimization is to minimize the mass of a drone in order to increase flight time. To ensure structural stability, the maximum deflection of the motors is constrained to 2 mm during flight conditions. The drone will be optimized for multiple flight profiles ranging from cruising, to crash landings and the topology for each will be compared.

2 Geometry

2.1 Initial Design Domain

The initial geometry consisted of a solid rectangular block of material that represented where the final geometry could be located. Two way symmetry was used to speed up the computation so only a fourth of the drone is represented in the initial geometry.

The dimensions of the initial drone were:

$$L = 245 \text{ mm}, \quad W = 196 \text{ mm}, \quad H = 50 \text{ mm}$$

This is the maximum size of the drone so that it can be 3D printed in one piece using the Makerspace printers.

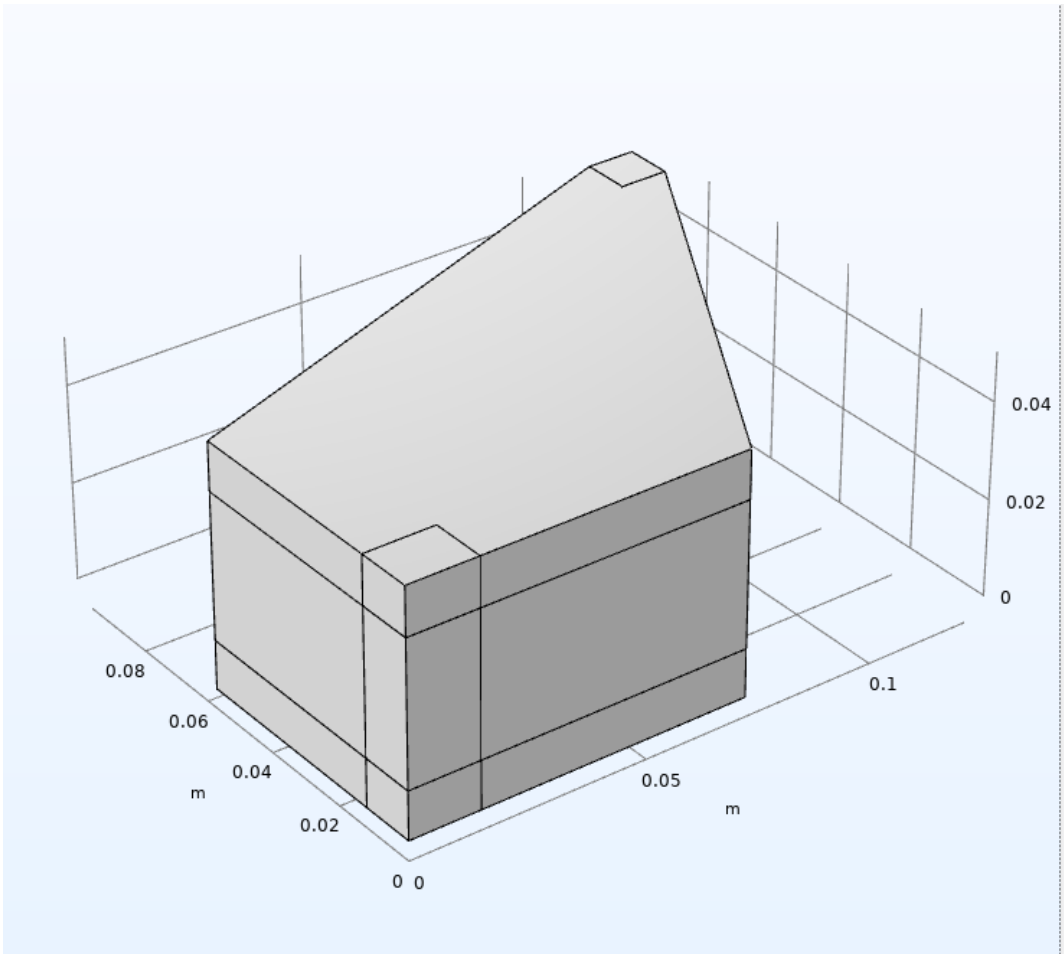

Figure 1: Initial Geometry

Prescribed material was placed to model where the motors and battery would mount to the frame. This material cannot be optimized. The remaining volume was set as the design domain.

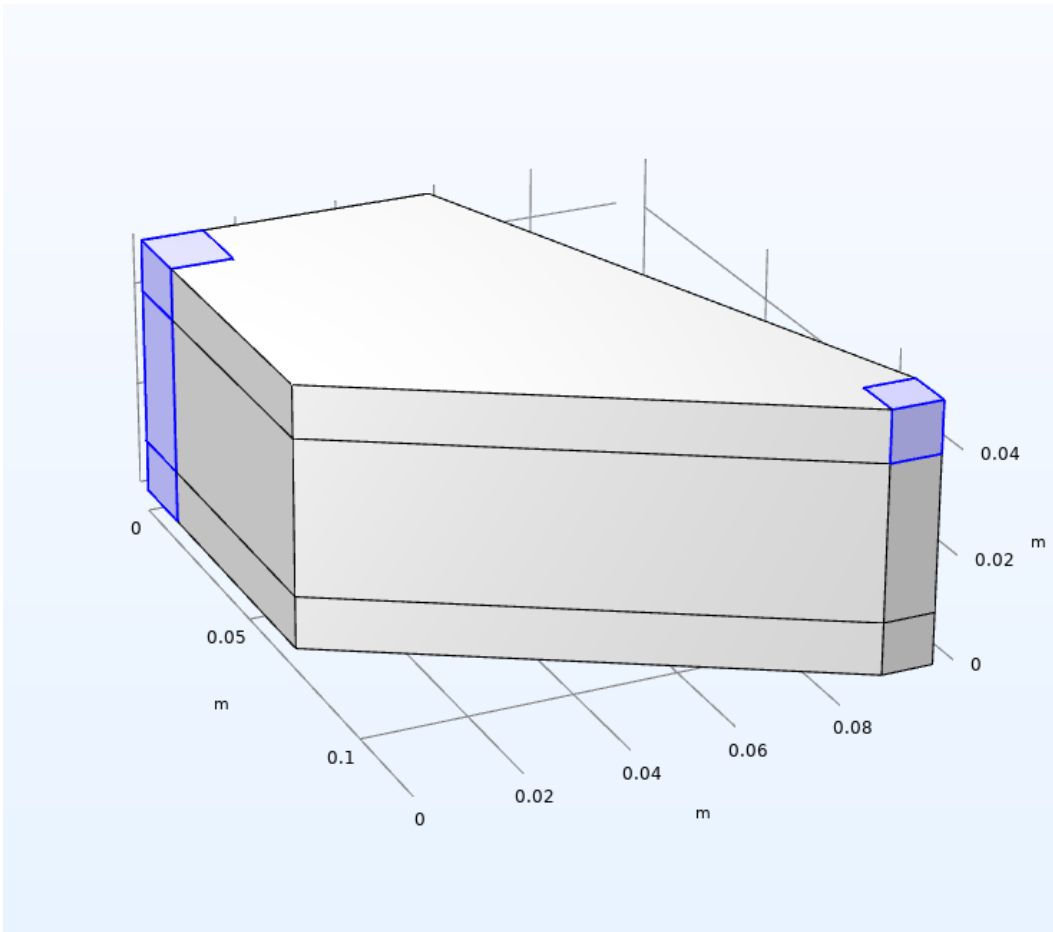

Figure 2: Prescribed geometry

3 Material Properties

The drone frame will be manufactured on a 3D printer in PLA.

Table 1: PLA Material Properties

Property	**Value**	**Units**
Young's Modulus, E_0	3,500	MPa
Poisson's Ratio, ν	0.36	—
Density, ρ	1,240	kg/m^3
Tensile Yield Strength	50	MPa

All designs must have a maximum stress of under 50 MPa to ensure that the design will not fail under loading.

4 Problem Formulation

4.1 Design Variables

The design variable is the material density field:

$$\rho(x) \in [0, 1]$$

where:

- $\rho = 1$ represents solid material
- $\rho = 0$ represents void

4.2 Material Interpolation (SIMP)

For penalization, the Solid Isotropic Material with Penalization (SIMP) method is used:

$$E(\rho) = \rho^p E_0$$

where:

- E_0 is the Young's modulus of solid material
- p is the penalization parameter

Final penalization value used: $p = 4$

4.3 Projection

A projection was completed to sharpen edges on the final results using projection parameter β.

Final projection value: $\beta = 8$

5 Objective and Constraints

5.1 Objective Function (Minimize Volume)

The objective function of the optimization was to minimize the volume of the final design. This the same as minimizing weight which is important to drones.

5.2 Deflection Constraint

To constrain the solver, a maximum displacement was set:

$$u_{\max}(\rho) \leq 2\,\mathrm{mm}$$

5.3 Load Cases

A force was applied to the middle of the drone where the battery would be:

$$\mathbf{F} = a\,m\mathbf{g}$$

with:

$$a = \{2, 5, 10\}$$

This represents the forces that are applied to the drone during cruising, maneuvers, and a crash landing.

5.4 Motor Torque Load

A second force was applied where the motors sit. This force represents to torque that would be applied to the body of the drone from the motors spinning and producing thrust.

$$T = 2.5Nm$$

6 Setup

6.1 Mesh Strategy

A two-stage optimization was implemented where the first stage runs on a coarse mesh and also does a parametric sweep of the SIMP and Beta variables. The second stage uses the stage one solution and a fine mesh to refine the geometry.

1. Coarse mesh for topology discovery
2. Fine mesh for refinement

- Coarse mesh element size: 1.75mm
- Fine mesh element size: 0.875mm

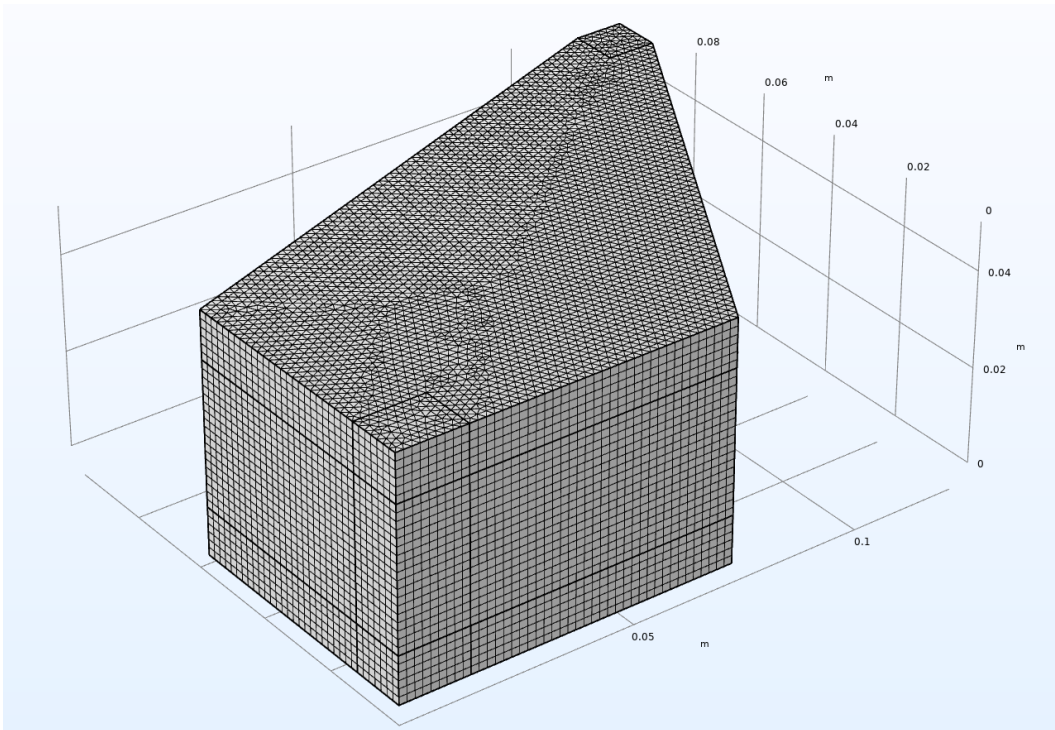

Figure 3: coarse Mesh

6.2 Solver

- Optimization method: MMA
- Study type: Stationary
- Continuation: SIMP and projection

6.3 Density Distribution

During optimization, density values are assigned within the design domain. Sometimes these values are left between 1 and 0 which cannot be exported to a final design or be manufactured.

After convergence, a density threshold of $\rho = 0.5$ was used to extract the final geometry. This ensures that the final design only exists of solid geometry and void regions.

7 Results

7.1 Case 1: $a = 2$

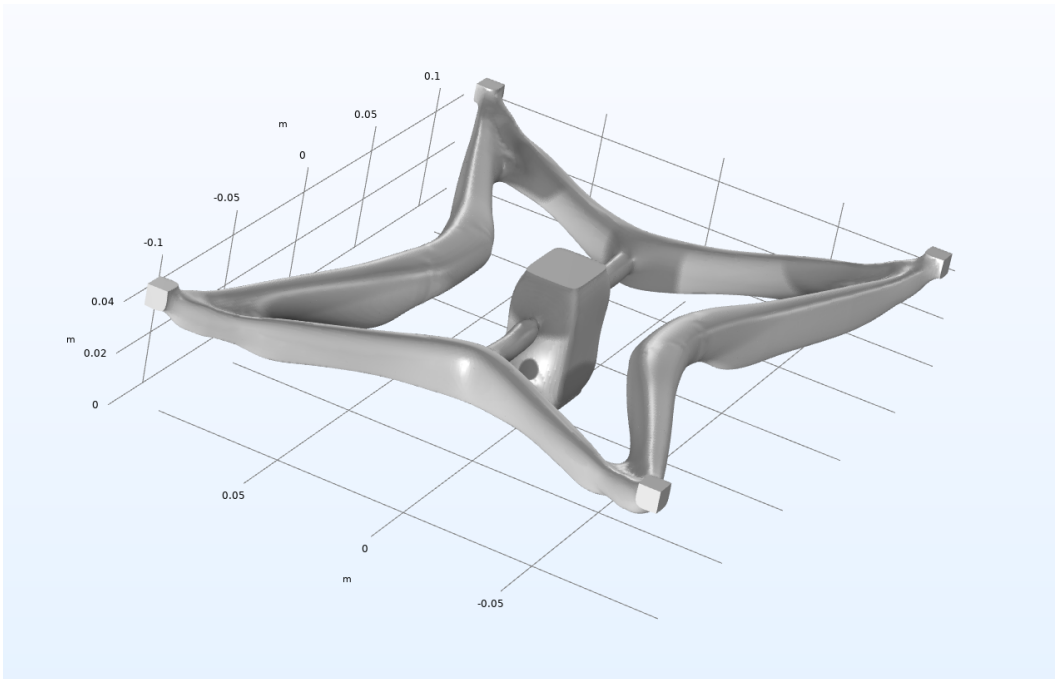

Figure 4: Optimized topology for a = 2

- Final volume: 21.4 cm^3

- Max stress: 4.99 MPa

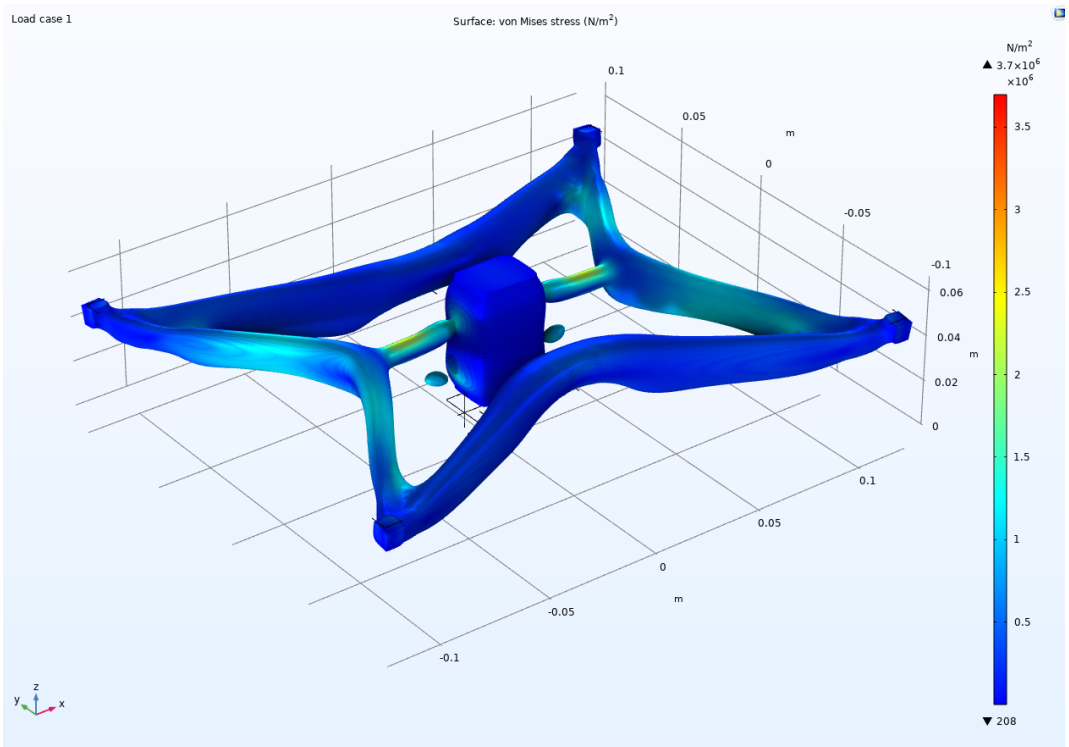

Figure 5: Stress analysis of gravitational load

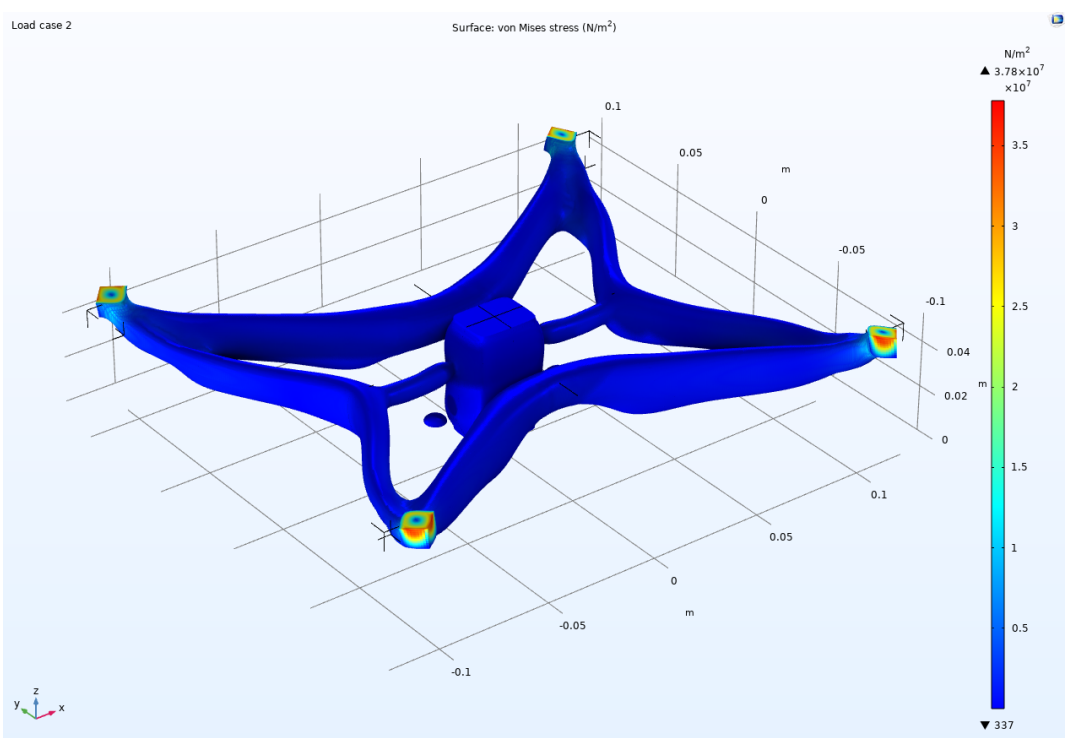

Figure 6: Stress analysis of torque produced by motors

7.2 Case 2: $a = 5$

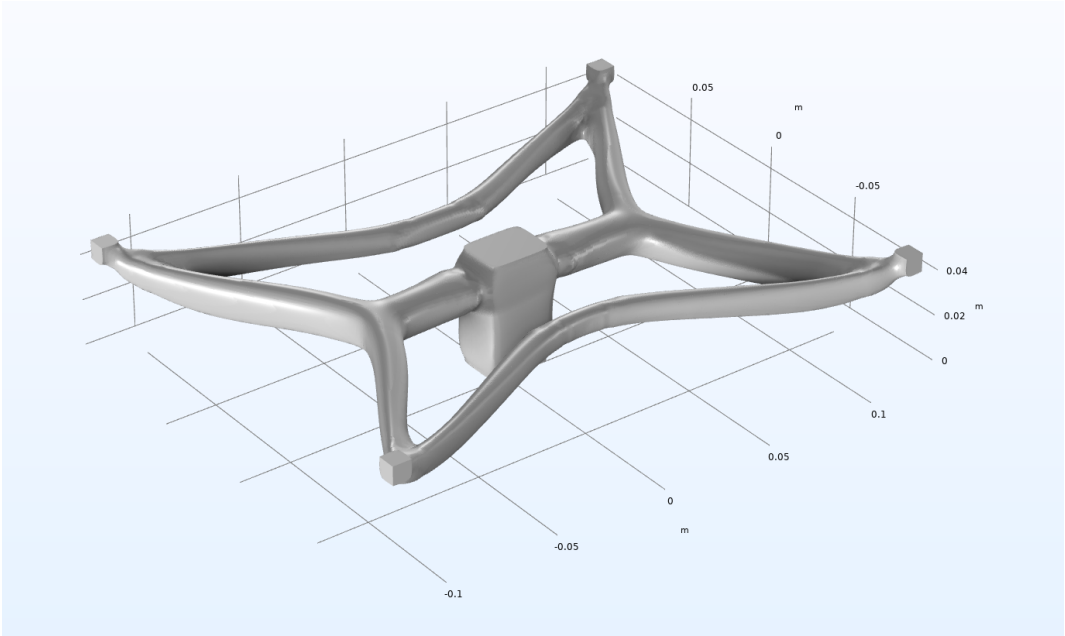

Figure 7: Optimized topology for a = 5

- Final volume: 16.6 cm^3

- Max stress: 19.1 MPa

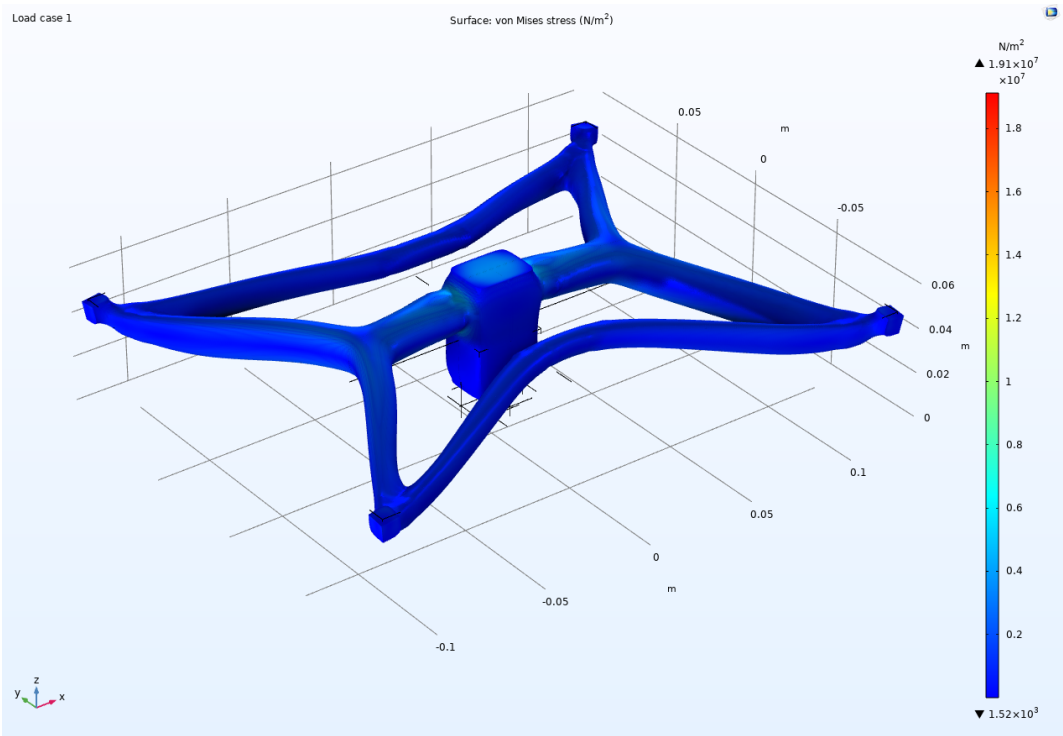

Figure 8: Stress analysis of gravitational load

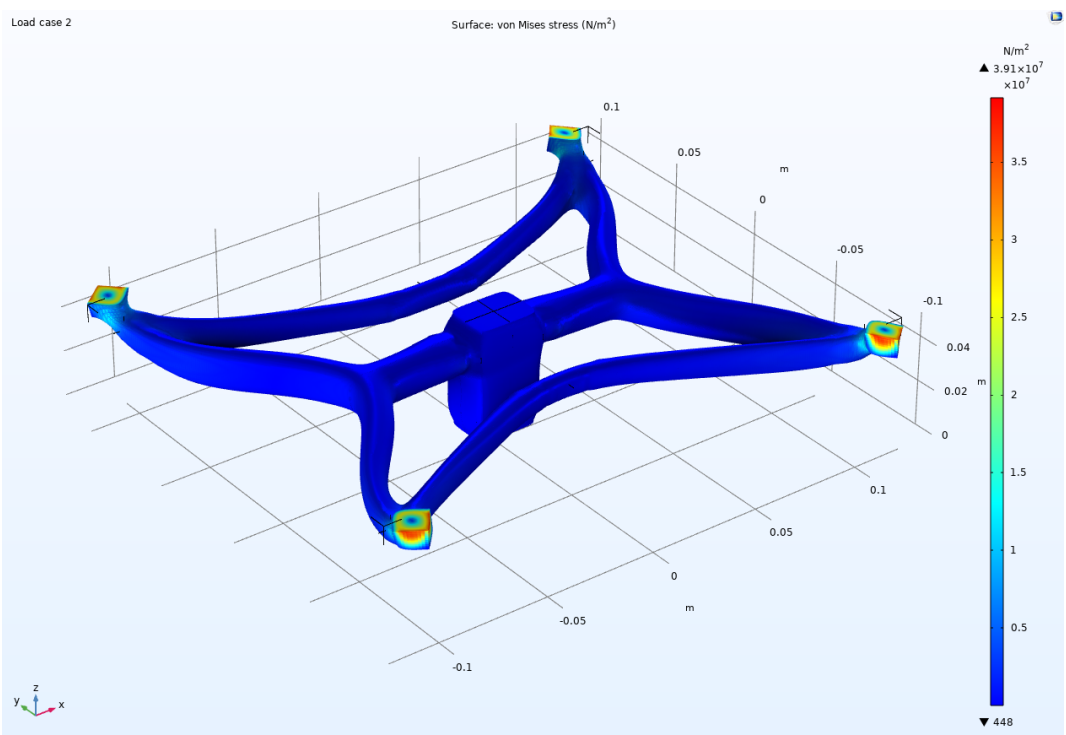

Figure 9: Stress analysis of torque produced by motors

7.3 Case 3: $a = 10$

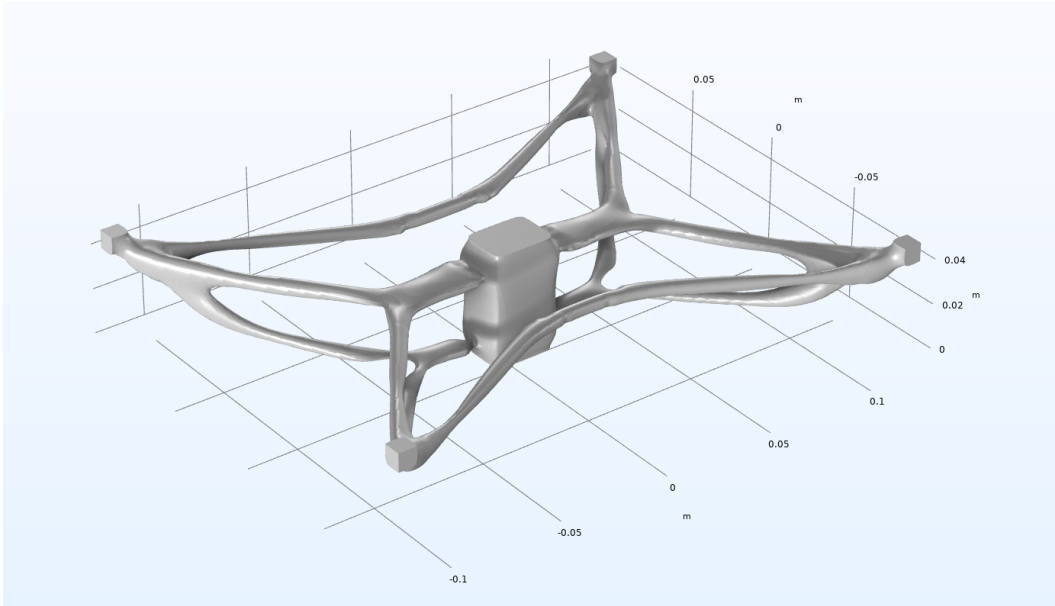

Figure 10: Optimized topology for a = 10

- Final volume: 9.34 cm^3

- Max stress: 36.7 MPa

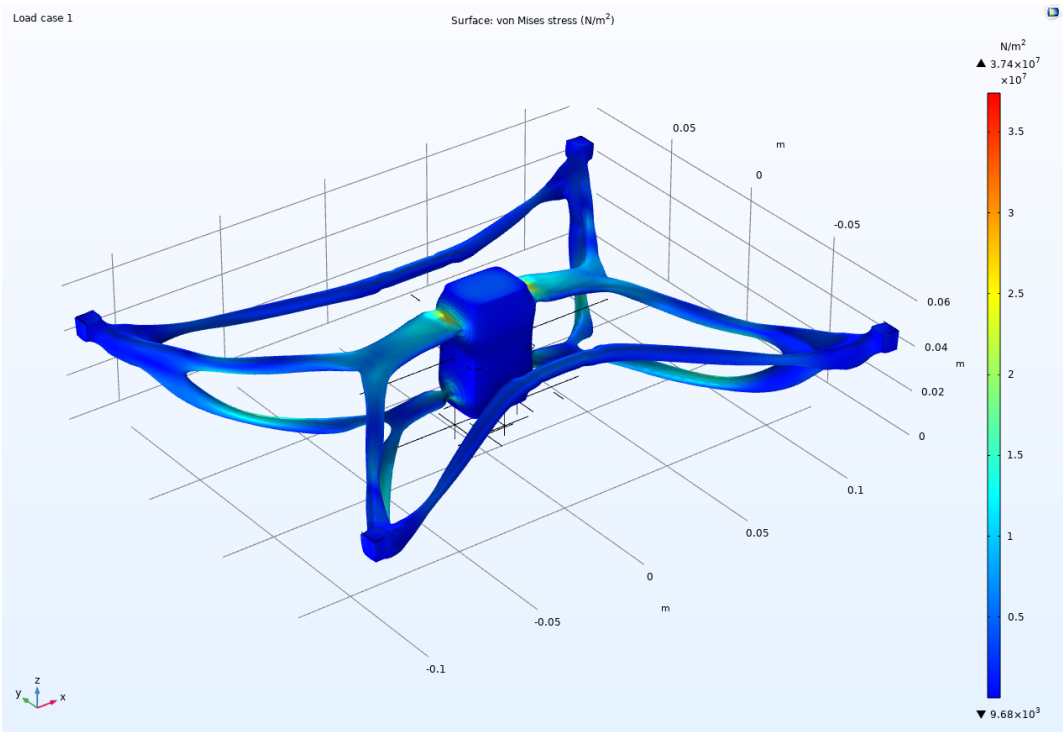

Figure 11: Stress analysis of gravitational load

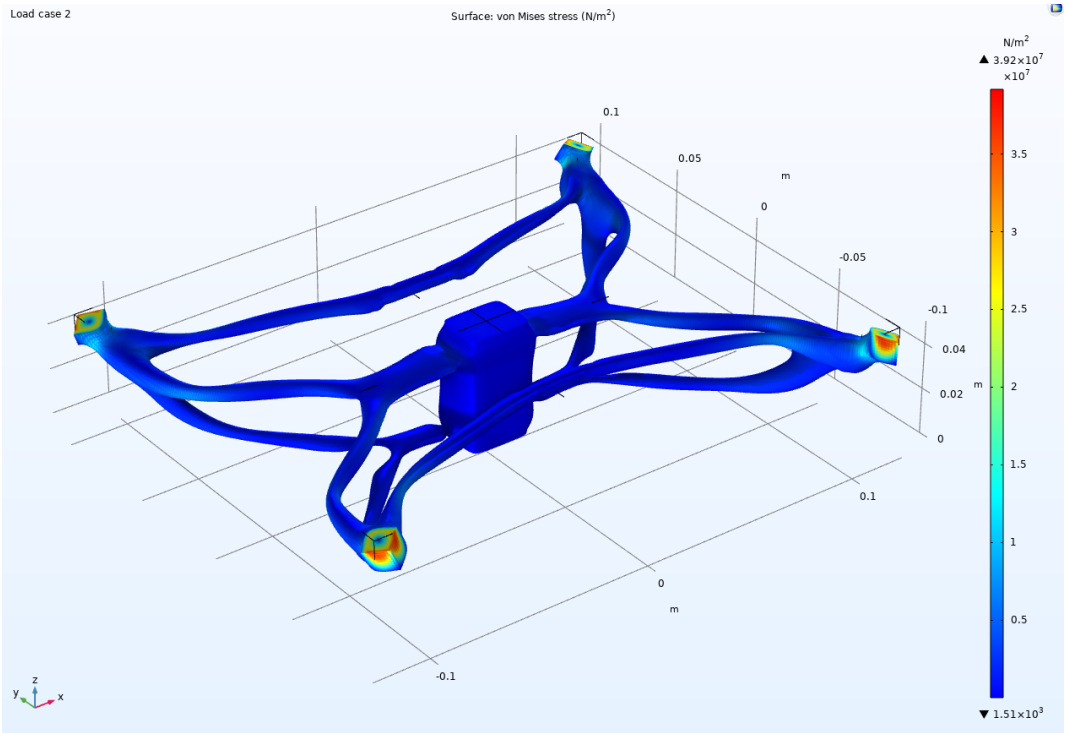

Figure 12: Stress analysis of torque produced by motors

8 Discussion

Table 2: Summary of Topology Optimization Results

Case	Load Factor a	Volume (cm^3)	Mass (g)	Max Stress (MPa)	Safety Factor
1	2	21.4	26.5	4.99	10.0
2	5	16.6	20.6	19.1	2.62
3	10	9.34	11.6	36.7	1.36

The results show the opposite of what the expected results were. As the applied force increases, the volume of the final design decreases. This is very counter intuitive because higher loads usually need stronger and thicker members to support them without large deflections. As seen in the stress analysis of Case 1 and Case 3, the motor torque is the main and most stressful load case for these designs. In Case 1, the gravitational load has almost no effect. In Case 3, when 10 Gs are applied, the stresses generated are almost equivalent to those generated by the forces from the motors. This shows the reason that drones are usually designed based on the forces generated by the drone itself and not any gravitational forces. The reason that the volume increases as applied load increases is because the optimizer converged on a solution which subjected the design to lower stress. The max stress in Case 1 is 4.99 MPa while the max stress in Case 3 is 36.7 MPa. By accepting a higher max stress(still under yielding) the optimizer was able to reduce the volume of the final design. The max deflection in each design is 2 mm because this was the constraint on the solver.

Visually, Cases 1 and 2 are similarly designed while Case 3 has an extra support beam which connects the motor to the battery directly. This is what is expected because Case 3 has the highest gravitational load. The extra support beam essentially creates a triangular structure which greatly helps to support the battery vertically and takes a lot of stress off of the existing connection which is seen in Cases 1 and 2. This means that the existing connection can be made much thinner.

If this drone went into production today, Case 2 is the most realistic design. It is deigned to withstand forces up to 5 Gs with a safety factor of 2.6 which is very reasonable for a drone of this size.

9 Conclusions

In conclusion, this project was successful at designing a drone frame which can survive high loads during flights and emergency scenarios. A lot was also learned about optimization inside of COMSOL. For one, the two step optimizer which goes from a coarse mesh to fine

mesh saved hours of computation time and allowed faster iteration on the setup and initial conditions of the optimizer. The project also shows just how sensitive 3D designs are to loading conditions and why it is so important to accurately estimate all possible loading conditions when designing.

Future work for this project would include frequency studies and manufacturing constraints. An optimization including frequency would ensure that the drone frame does not resonate when the rotors are spinning. Manufacturing constraints would ensure that the drone could be massed produced from a specified material and method. As of now, the presented designs can only be made from 3D printing which is not a common method of drone manufacturing.