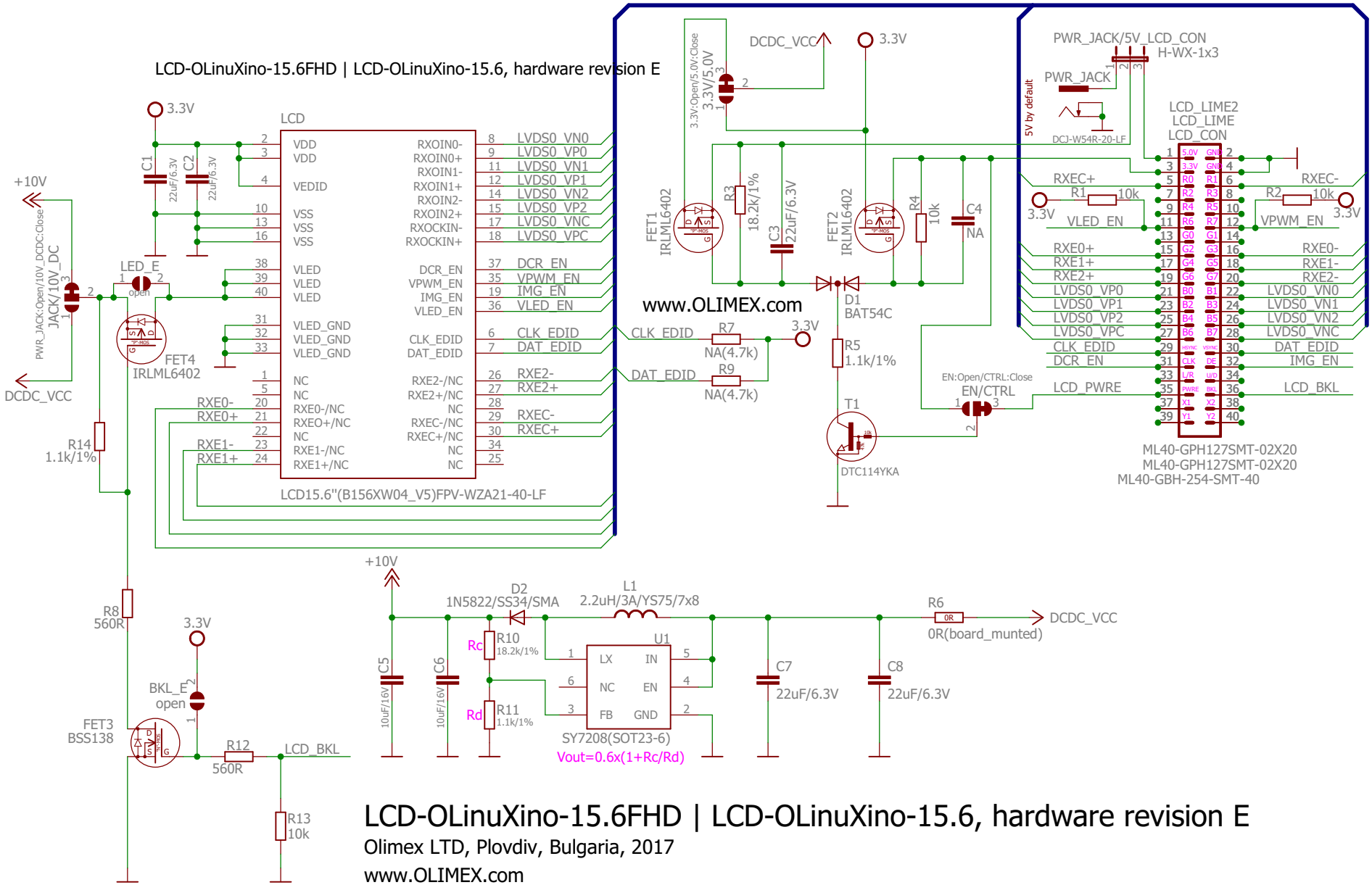
LCD-OLinuXino-15.6FHD | LCD-OLinuXino-15.6, hardware revision E
LCD
LCD15.6"(B156XW04_V5)FPV-WZA21-40-LF
www.OLIMEX.com
PWR_JACK/5V_LCD_CON
H-WX-1x3
PWR_JACK
DCJ-W54R-20-LF
5V by default
LCD_LIME2
LCD_LIME
LCD_CON
ML40-GPH127SMT-02X20
ML40-GPH127SMT-02X20
ML40-GBH-254-SMT-40
JACK/10V_DC
PWR_JACK:Open/10V_DCDC:Close
DCDC_VCC
3.3V/5.0V
3.3V:Open/5.0V:Close
FET1
IRLML6402
FET2
IRLML6402
FET4
IRLML6402
D1
BAT54C
T1
DTC114YKA
EN/CTRL
EN:Open/CTRL:Close
D2
1N5822/SS34/SMA
L1
2.2uH/3A/YS75/7x8
U1
SY7208(SOT23-6)
Vout=0.6x(1+Rc/Rd)
0R(board_munted)
FET3
BSS138
LCD_BKL
LCD-OLinuXino-15.6FHD | LCD-OLinuXino-15.6, hardware revision E
Olimex LTD, Plovdiv, Bulgaria, 2017
www.OLIMEX.com