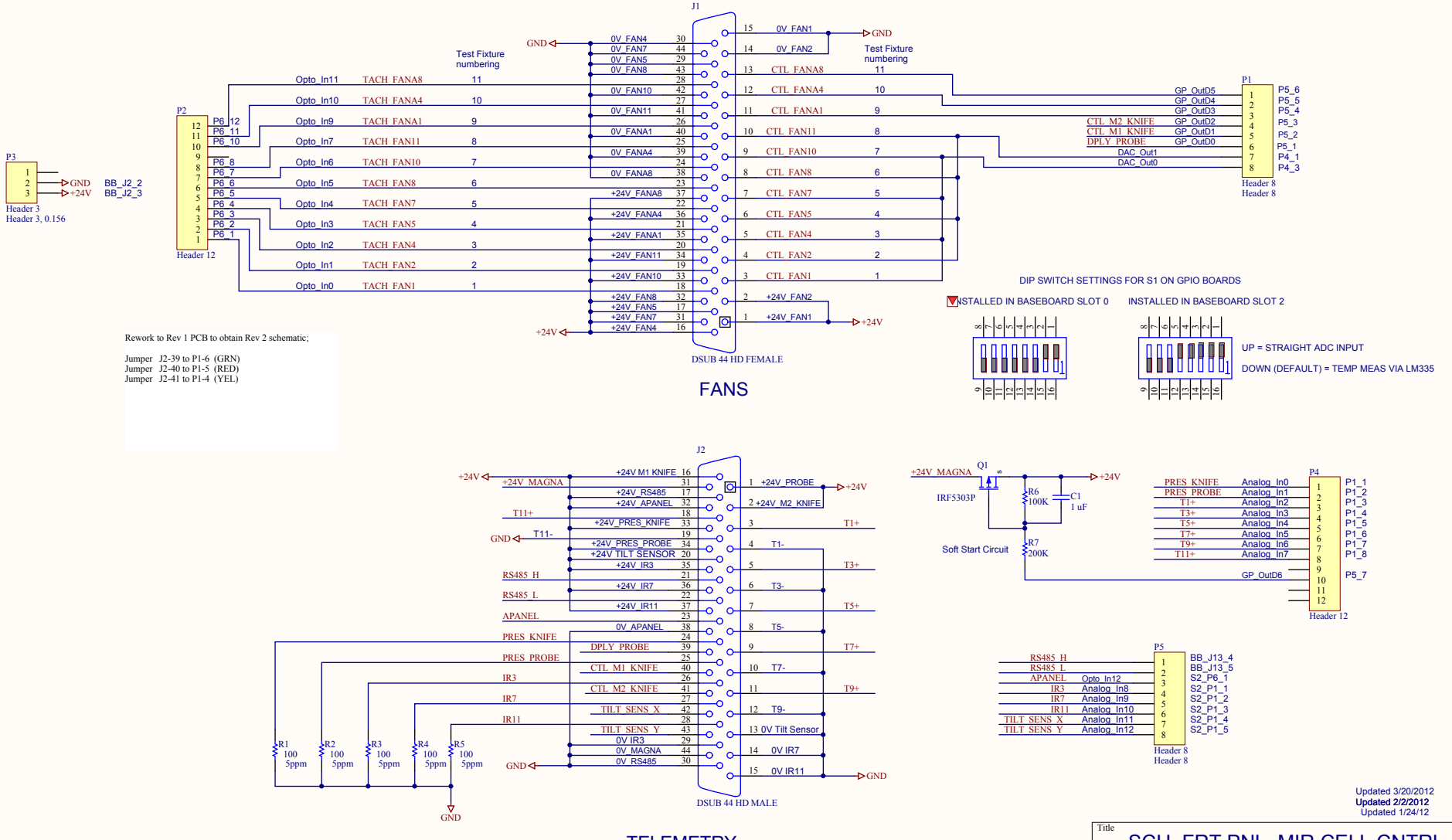

Updated 3/20/2012
Updated 2/2/2012
Updated 1/24/12

Title		
SCH, FRT PNL, MIR CELL CNTRL		
Size: B	Number: 780-00041	Revision: 2
Date: 1/7/2013	Sheet of	
File: \\..\780-00041, rev2, Front Panel, Mirror Cell Controller.SchDoc	Drawn By:	