SERVICE MANUAL

Cat. No. : 27643

Start® Is a trademark registrered by Diagnostica Stago

1.	INTRODUCTION	1-1
1.1.	General	1-1
1.2.	ST art Technical Specifications	1-1
1.3.	Precaution in use	1-2
1.4.	Decontamination Procedure	1-2
1.5.	ST art Architecture	1-3
1.6.	Principle of Measurement	1-4
1.7.	Principle of Temperature Regulation	1-5
2.	DESCRIPTION OF THE MOTHER PC BOARD 4/8 CHANNELS	2-1
2.1.	Introduction	2-1
2.2.	Power Supply Disbribution	2-1
2.3.	Mother PC Board	2-2
2.3.1.	Temperature Heating/Regulation	2-7
2.3.2.	Measurement	2-10
2.4.	Printer Interface	2-12
2.5.	Display Interface	2-14
2.6.	Keyboard	2-14
3.	INSTALLATION PROCEDURE	3-1
3.1.	Unpacking and Installation	3-1
3.2.	Software Setup	3-2
4.	MAINTENANCE	4-1
5.	TROUBLESHOOTING GUIDE	5-1
5.1.	Display	5-1
5.2.	Keyboard	5-1
5.3.	Printer	5-2
5.4.	Ball Swing	5-2
5.5.	Reagent Stirring	5-3
5.6.	Measurement	5-3
5.7.	Temperature	5-4
5.8.	Pipette	5-5

6. ADJUSTMENTS 6-1

6.1. Electronic Adjustments 6-1

6.1.1. Temperature Reference on the Mother PC Board 6-1
6.1.2. Printing Contrast 6-1

6.2. Mechanical Adjustments 6-1

6.3. Software Adjustments 6-2

6.3.1. Channel Calibration 6-2
6.3.2. Temperature Calibration 6-3
6.3.3. Motorization Calibration 6-4

7. DISASSEMBLY AND REASSEMBLY 7-1

7.1. Remove the lower cover 7-1

7.2. Remove the upper cover 7-2

7.3. Remove the Mother PC board 7-3

7.3.1. LCD display 7-3
7.3.2. Thermal printer 7-4
7.3.3. Thermal protection 7-5
7.3.4. Measurement block 7-5
7.3.5. Measurement head 7-6
7.3.6. Heating board 7-6
7.3.7. LM35 component 7-8
7.3.8. RS232 cable 7-8
7.3.9. Mains filter 7-9
7.3.10. Mains block 7-9
7.3.11. Pipette socket 7-9
7.3.12. Fuse holder 7-9
7.3.13. +24V power supply 7-9
7.3.14. +5/+12/-12V power supply 7-10
7.3.15. Battery 7-10

8. ELECTRONIC SCHEMATICS AND COMPONENT LAYOUTS 8-1

8.1. Mother PC Board 8-1

8.1.1. Electronic Schematic for 4 Channel Version 8-1
8.1.2. Electronic Schematic for 8 Channel Version 8-10
8.1.3. Weld Layout 8-21
8.1.4. Component Layout 8-22

8.2. Keyboard 8-23

8.2.1. Electronic Schematic 8-23

8.3. Measurement Head 8-25

8.3.1. Electronic Schematic 8-25
8.3.2. Cell Layout 8-27

9. SPARE PARTS LIST 9-1

9.1. Spare Part List 9-1

9.2. Illustrated Spare Part List 9-3

10. TECHNICAL INFORMATION 10-1

11. USER INTERFACE RS232-C 11-1

11.1. Physical Characteristics 11-1

11.2. Exchange Protocol 11-1

12. LABORATORY ACCREDITATIONS 12-1

Revision Table

Manual Version	Date	Software Version	List of Modifications
V 1.A0	December 97	V 1.63	Preliminary Version
V 1.0	January 99	V 2.10	Original Version
V 1.0	December 99	V 2.10	Original Version No. 2 : all pages

SIGNIFICATION OF THE SYMBOLS USED ON THE ST art

Alternating Current

Direct current

Protective earth
(Ground)

Attention, consult ACCOMPANYING DOCUMENTS

Off (power: disconnection from the mains)

On (power: connection to the mains)

Type B equipment

Dangerous voltage

Printer Contrast adjustment

Temperature adjustment

Cuvettes

Single use only

Keep away from magnetic fields

1. INTRODUCTION

1.1. General

The ST art coagulation instrument is designed to determine clotting times on whole blood and plasmas. The ST art is a:

- 4 channels (Ref.: 996C001: France and export version and Ref.: 996C003 for US Version);
- 8 channels (Ref.: 996C002: France and export version and Ref.: 996C004 for US Version).

Fully independent instrument with integrated calculator and printer. For all clotting assays, the calibrations are stored in memory and the results are given in the unit chosen by the operator. The clotting times are determined through electromagnetic sensors which can measure the ball oscillation amplitude variations. This system enables the detection of abnormal clots (low fibrinogen concentration, heparin treatment...).

When using the connected pipette, the reagent addition is automatically detected.

1.2. ST art Technical Specifications

Standards	Complie with the standards: All the connected devices must be complied with the **IEC 950** standard. - **230 V** ST art: **CE** marking (**EN60601-1-2, EN61010**) and **GS** mark. - **115 V** ST art: **UL3101-1** (Underwriters Laboratory).
Test Performance	Intra-assay Reproducibility with Diagnostica Stago Products: **Normal Plasma** / **Pathological Plasma** PT (sec.) <1.5% / <2% APTT (sec.) <1.5% / <2% Fibrinogen (sec.) <4% / <5%
Dimensions	Depth : **420** mm (16.5 in.) Width : **410** mm (16.1 in.) Height : **120** mm (4.7 in.)
Weight	**5.7** kg ~ (12.54 Lbs)
Power Supply	Class I type B Voltage: **90-230V~** Frequency: **50-60** Hz Power: **110** W max.
Operating Conditions	- Room temperature: **+ 15** to + **32°C** (+ **59**°F to + **89.5**°F) - Relative humidity: **20** to **80** % - Altitude < **2000** m
Measurement Principle	Electromagnetic sensor. Plasma or whole blood. Automatic (with electronically connected pipette) or manual triggering of measurement.
Data Management	- Back light liquid crystal display (4 lines of 40 characters). - Built-in thermal printer of 40 columns. - 21 numerical and function control keys. - Results in seconds, %, ratio, INR, g/l, mg/dl, IU/ml. - RS232 interface.

Sample and Reagent Handling	- Incubation and measurement wells at 37 °C ± 0.5 °C with: • ***Incubation positions for samples:*** - ST art 4 channels : 16 positions (4 cells x 4 columns); - ST art 8 channels : 32 positions (4 cells x 8 columns). • ***Measurement positions:*** - ST art 4 channels : 4 positions (1 column); - ST art 8 channels : 8 positions (1 column). • 2 positions for reagents (one with magnetic stirrer) with 2 pipette wells. - 4 independent built-in timers for incubation; - Incubation control with audible alarm; - 1 storage position for Ball dispenser.
Test Cuvettes	Divisible cuvette strips. Patent design.
Recommended Cleaning	Use a 1:10 dilution of 5% sodium hypochlorite, rinse then dry with a paper tissue slightly moistened with warm water.
Warm-up Duration	30 min.

1.3. Precaution in use

Any electrical equipment is potentially dangerous. Unplug the ST art from outlet before attempting to remove any parts from the instrument.

However, certain adjustments have to be made with the cover opened and the ST art switched on . In such cases, only personnel properly authorised by Diagnostica Stago may work on the instrument, and then only on the condition that the basic safety rules are strictly observed.

1.4. Decontamination Procedure

In accordance with the recommendations of the French Federation of Laboratory Reagent Manufacturers (SFRL) as well as those provided in the OSHA Act (in the USA) in regard to persons working in contact with biological substances that may be hazardous, the following decontamination procedures have to be performed prior to any service intervention:

- **Cleaning the working surface;**
- **Cleaning washing wells;**
- **Cleaning the thermal conductors.**

Refer to the ST art Operator's Manual chapter 8.1.1.

Moreover, the proper precautions for handling biohazardous materials should be observed in accordance with local existing regulations.

1.5. ST art Architecture

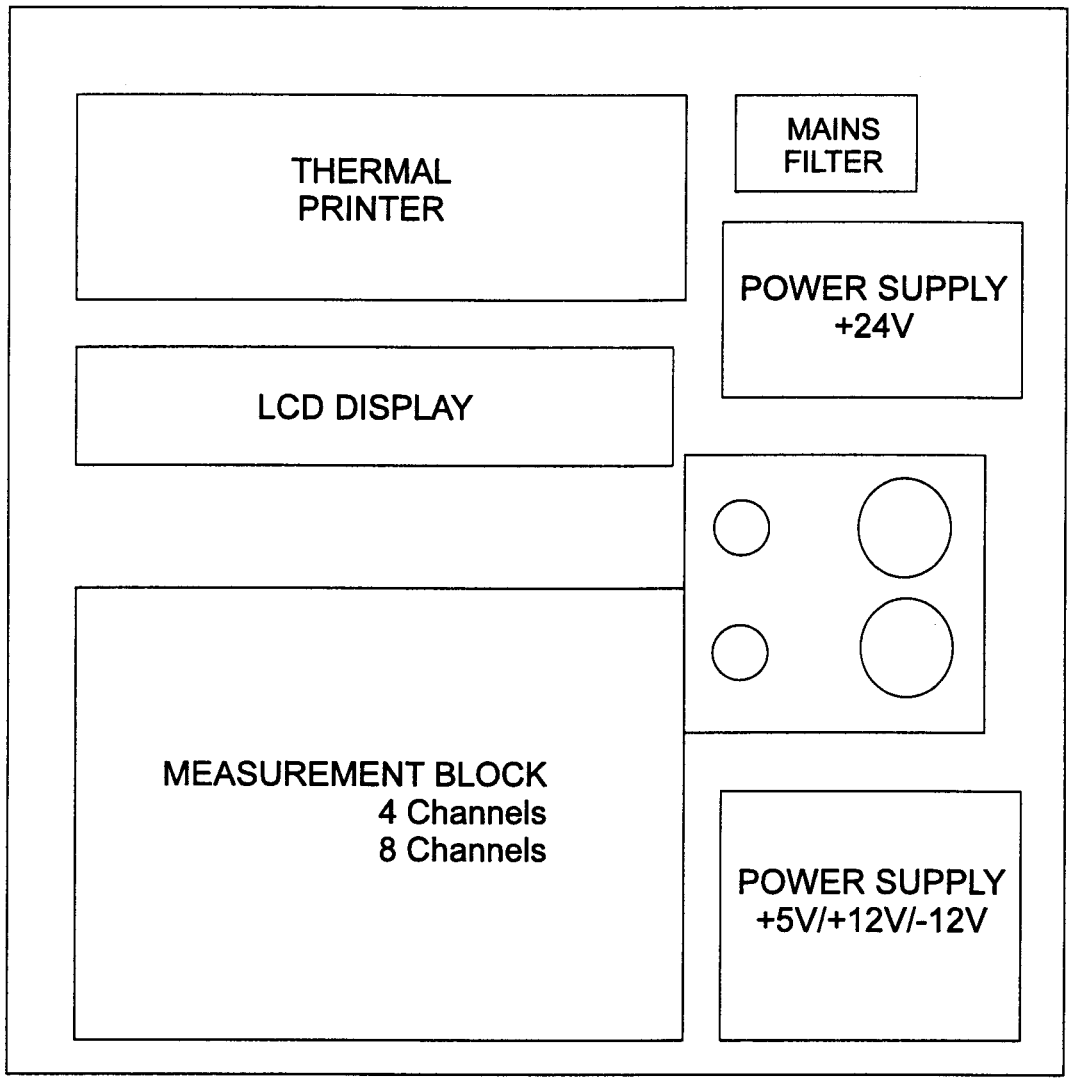

Figure 1 - ST art Architecture

1.6. Principle of Measurement

The detection system for clotting-time assays on the ST art is based on the increase of viscosity of the plasma being tested. This increase of viscosity is measured through the motion of a stainless steel ball which is made to effect pendular swings on the two curved rail tracks provided in the bottom of the cuvette containing the test plasma.

Constant pendular swings of the ball at constant viscosity is achieved by means of the two curved rail tracks of the cuvettes and an electromagnetic field created alternately at opposite sides of the measurement well.

For each measurement head, the energy of the electromagnetic field can be varied depending on the test being performed (PT, TCA, Fibrinogen).

The measurement coils is constituted by a receiving coil and a transmitting coil.

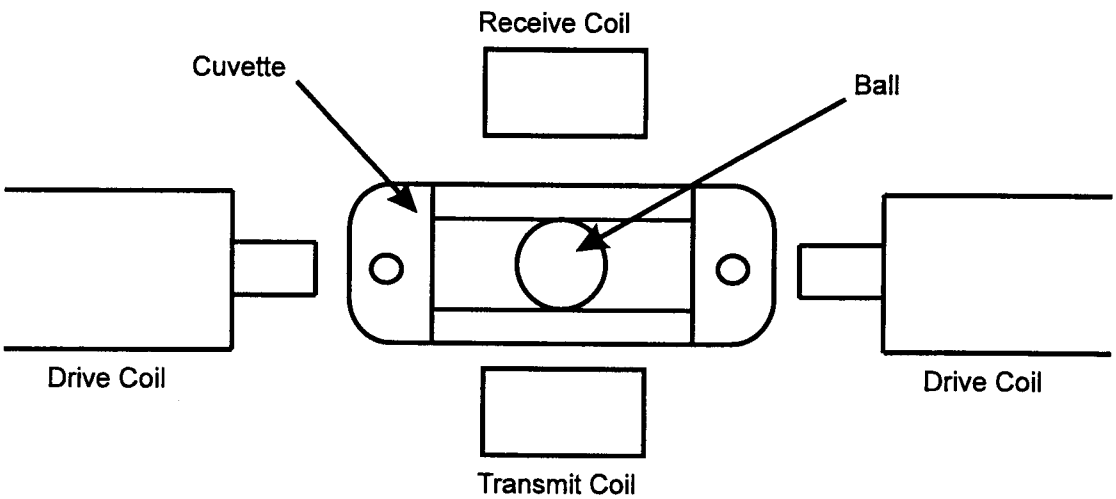

Figure 2 - Physical Principle of Measurement System

At constant plasma viscosity, ball motion remains constant. As the viscosity increases (clotting phenomenon), the oscillation amplitude of the ball swing decreases. An algorithm uses these variations in oscillation amplitudes to determine the clotting time.

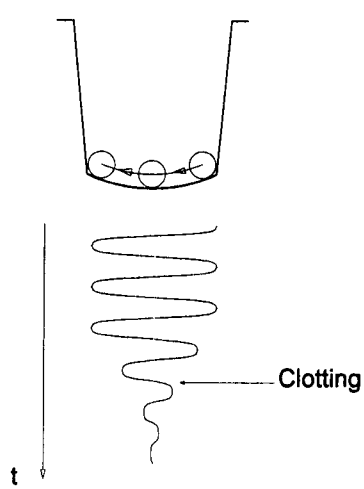

Figure 3 - Ball Motion Schema

1.7. Principle of Temperature Regulation

The zones to maintain at 37 °C are the analysis zone including the incubation and measurement zones, and the reagent incubation zone which can contain 2 vials.
The temperature regulation is made *via* a laminar resistor, a temperautre sensor and temperature regulation circuits.

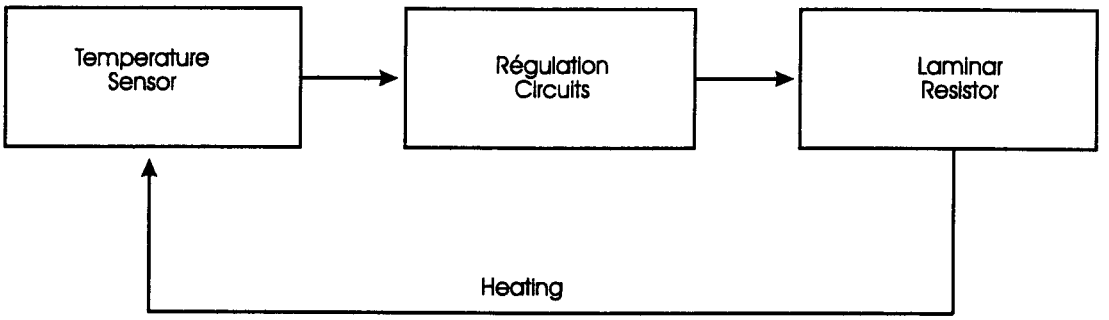

Figure 4 - Principle of Temperature Regulation

2. DESCRIPTION OF THE MOTHER PC BOARD 4/8 CHANNELS

2.1. Introduction

The ST art is constituted by one board: the mother PC board 4 or 8 channels following the model. Only five equipments are not jointly liable to this board but are nevertheless necessary for its running:

- The fan;
- The display;
- The printer;
- The keyboard,
- The measurement block.

2.2. Power Supply Disbribution

Reference	S-0301257 (+24V) S-0301258 (+5/+12/-12V)

Reference Schema	0231053x, page : 1 (x : current index) 0231081x, page : 1 (x : current index)
Quantity	1 of each
Power Supply	90-230V~

The mains voltage (90-230V AC) after passage through a mains filter (WW6) supplies the following components:

- a switching power supply (WW3) which generates these voltages: +5 V, +12V and -12 V;
- a switching power supply (WW4) which generates the voltage +24V supplying:
  - a fan;
  - the stirring motor;
  - the heating measurement block.

Including in the mains filter, there are two protection fuses (T 3 A).

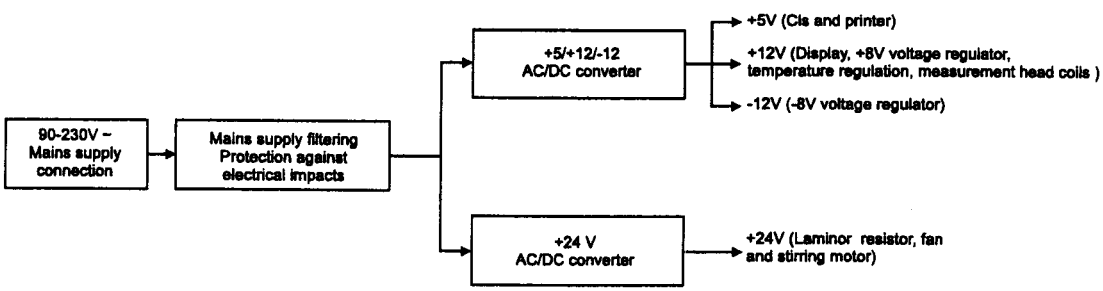

Fig. 1 - Power supply distribution - Block diagram

2.3. CPU Board

Reference	S-0231053 / 4 channels S-0231081 / 8 channels

Schema of reference	0231053x (8 pages) (x : current index) 0231081x (10 pages) (x : current index)
Power supplies	+5/+12/-12V ; + 24 V
Connectors	See table below

Connector	To		
CPU	**Name**	**Reference**	**Connector**
J502	Thermal printer	S-99VC002	J503 /14 points J504 /10 points
J103	LCD display	S-99VC001	16 points
J104/J114 ou J124/J134			Any of 3 contacts for each 4 connectors
J105	Keyboard	S-0231060	-
J106	RS232 cable	S-0254073	-
J112	Pipette	S-0091186	-
J703	Fan	S-0301259	2 points
J1050	Keyboard test		14 points

FUNCTION:

This board includes two microprocessors (and their outbuilding components): a measurement microprocessor and a management microprocessor.

The measurement microprocessor allows:

- to generate the control signals of the driving coils for each measurement head;
- to convert the pretreated analog signals of each measurement head into digital values;
- to transmit the results of the measures to the management microprocessor.

The management microprocessor manages the interfaces with the peripheral circuits: keyboard, pipette control key, display, printer, temperature regulation, RS232 communication, pipette contact, buzzer.
It generates the carrier frequency of the emitting coils.

It receives from the measurement microprocessor the results of the measures and processes them (conversion into units, display, printout).

This board allows also to support:

- the different memory circuits managed by the two microprocessors;
- the real time clock;
- the voltage regulators +8 et -8 V (necessary for the measurement function).

DESCRIPTION:

The two microprocessors (measurement and management) are 80C535 ones with multiplexed data and address buses. Each microprocessor includes:

- 256 bytes of RAM;
- three 16-bit counters;
- one 16-bit watchdog;
- one A/D converter 8-bit with 8 analog inputs and a programmable reference voltage;
- one programmable timer output;
- six 8-bit ports quasi-bidirectionnal (port 0 bidirectionnal);
- one serial output.

The two microprocessors use 12 MHz quartzs (XT101 and XT102).

Measurement Microprocessor (IC101) and its Peripheral Circuits

The measurement microprocessor can manage up to 8 measurement heads (driving control and conversion of the measurement signals).

- ***Control of the Driving Coils***

The signals, "MOTORx" and "SM0", "SM1" (synchronization of the motorization) are used to control the driving coils. "SM0" and "SM1" are generated by the port 5 of the microprocessor, the signals "MOTORx" by the port 4. These different signals are transferred to the driving coils.

- ***Conversion of the Measurement Signals***

For each measurement head, the signal after processing (MEASUREFx) is fed into one of the inputs of the analog- to-digital converter of the microprocessor (ANx). The diode couples [(D101, D102) to (D107, D108)] for the 4 channel Mother PC board or to (D115, D116) for the 8 channel Mother PC board, avoid that voltages greater than +5 V or less than 0 V arrive to the AD Converter. The resistors (R101, R102, ... R104) for the 4 channel Mother PC board or ... R108 for the 8 channel Mother PC board allow a current limitation and the capacitors (C101, C102, ... C104 for the 4 channel Mother PC board or ... C108 for the 8 channel Mother PC board) are ultimate filters.

- ***Communication with the Management Microprocessor***

The two microprocessors communicate through their respective serial interfaces on the lines TXD and RXD.

- ***Mutual Control of The Microprocessors***

It enables an automatic reset of the two microprocessors as soon as one of the level of the voltage supplied to these circuits is too low. The resets are managed by IC113 for IC101 and by IC128 for IC102.

Management Microprocessor (IC102) and its Peripheral Circuits

Interface with the different peripheral circuits.

- ***Address Decoding***

The three most significant address lines (ADR2_12 to ADR2_14) are decoded by the circuit IC110. So, 6 "chip selects" are obtained:

- $\overline{CS0}$ and $\overline{CS1}$ for the NOVRAM (IC109);
- $\overline{CS2}$ and $\overline{CS3}$ for the display ;
- $\overline{CS4}$ for the keyboard interface (IC112);
- $\overline{CS5}$ for real time clock circuit (IC113).

- ***Keyboard***

On the keyboard , the 16 keys of the numerical keypad and the 4 keys to trigger the timers are mounted like a grid of 4 columns (Xi), and 5 lines (Yj); when a key is depressed, a couple Xi, Yj is selected.

The signals Xi and Yj are transmitted from the keyboard to the Mother PC board. On this last one, the specialized circuit, IC112 keyboard interface, generates from the signals Xi and Yj the code corresponding to the selected key on the keyboard. This code is transmitted to the management microprocessor on the data bus (DATA_BUS2).

- ***Pipette Control Key***

The signal BPIP pipette control key is transmitted by the keyboard to the Mother PC board.

- ***Display***

For the data, the interface between the microprocessor and the display is realized by a 3-state bidirectionnal buffer (IC111).

The transfer direction is checked by the $\overline{RD2}$ signal (read of the microprocessor). The transfer is authorized by the signals $\overline{CS2}$ and $\overline{CS3}$ which are also transmitted after inversion and amplification to the display. The power supply necessary for the back-light is provided by the switching power supply (+5/+12/-12V) and is transmitted through J104/J114 or J124/J134.

- ***Printer***

The ports P4 and P5 of the microprocessor manage together with the circuits IC118, IC119 and IC120 the interface between the microprocessor and the printer. One part of P4 (P4.3 to P4.7) is used as input, the other part (P4.1, P4.2) as also P5 are used as output. Pull-up resistors keep all the receiving lines in high state as long as these lines are not selected.
Are also transmitted from the Mother PC board, the +5 V voltage and the ground (DGND).

- ***Temperature Signal***

The management microprocessor receives the analog signal of the temperature measured on one of the inputs (AN0) of its analog-to-digital converter. The diodes D121 and D122 avoid that a voltage greater than +5 V or less than 0V arrive to the A/D Converter. The R119 resistor allows a current limitation and the C119 capacitor is an ultimate filter.
The switching power supply (+5/+12/-12V) provides the +12V voltage and the ground (AGND).

- ***RS232 Interface***

On the two lines RXD and TXD, the management microprocessor communicates on the one hand with the measurement microprocessor, and on the other hand, through a specialized circuit (IC114), with external devices. The IC114 circuit allows the voltage level adaptation between the +12 V and -12 V used by the RS232 communication and the +5 V used by the microprocessor.

The measurement microprocessor can also use the serial interface through the same IC114 circuit. For this purpose, the lines T0 and T1 check the data switching: either management microprocessor-serial interface or measurement microprocessor-serial interface.

- ***Pipette Contact***

When the cabled pipette is connected to the ST art instrument, the management microprocessor is informed of each reagent distribution (each time the pipetting lever is depressed) by the "CONTACT" signal. This signal is transmitted on the $\overline{INT0}$ line. The diodes D117 and D118 avoid a voltage greater than +5 V or less than 0 V to arrive to the microprocessor.

- ***Buzzer***

On the P1.3 line, the management microprocessor controls a buzzer.

- ***Carrier Frequency***

The carrier frequency of the emitting coils ("DIG_CARRIER") is generated by the management microprocessor on its P1.1 output.

Memory Circuits

The measurement microprocessor manages 32K of RAM (IC107) and 32K of EPROM (IC105) through a 3-state latch (IC103). The management microprocessor manages 32K of RAM (IC108), 64K of EPROM (IC106) and 8K of NOVRAM (IC109) through a 3-state latch (IC104) (Note: the data and address buses are multiplexed ones). The most significant addresses are transmitted straight from the port 2 of the microprocessor to the memory circuits, the least significant ones (port 0) are transmitted through the latch. Once the addresses are latched, the data can also be transmitted by the port 0 of the microprocessor.

Real Time Clock

The IC113 circuit is the real time clock of the Mother PC board. A lithium battery (BT101) allows to maintain the time and date updated even in case of a voltage shortage.

+8 and -8 V Regulators

From the +12 V and -12 V provided by the switching power supply, the IC123 and IC124 voltage regulators generate respectively +8V and -8 V.

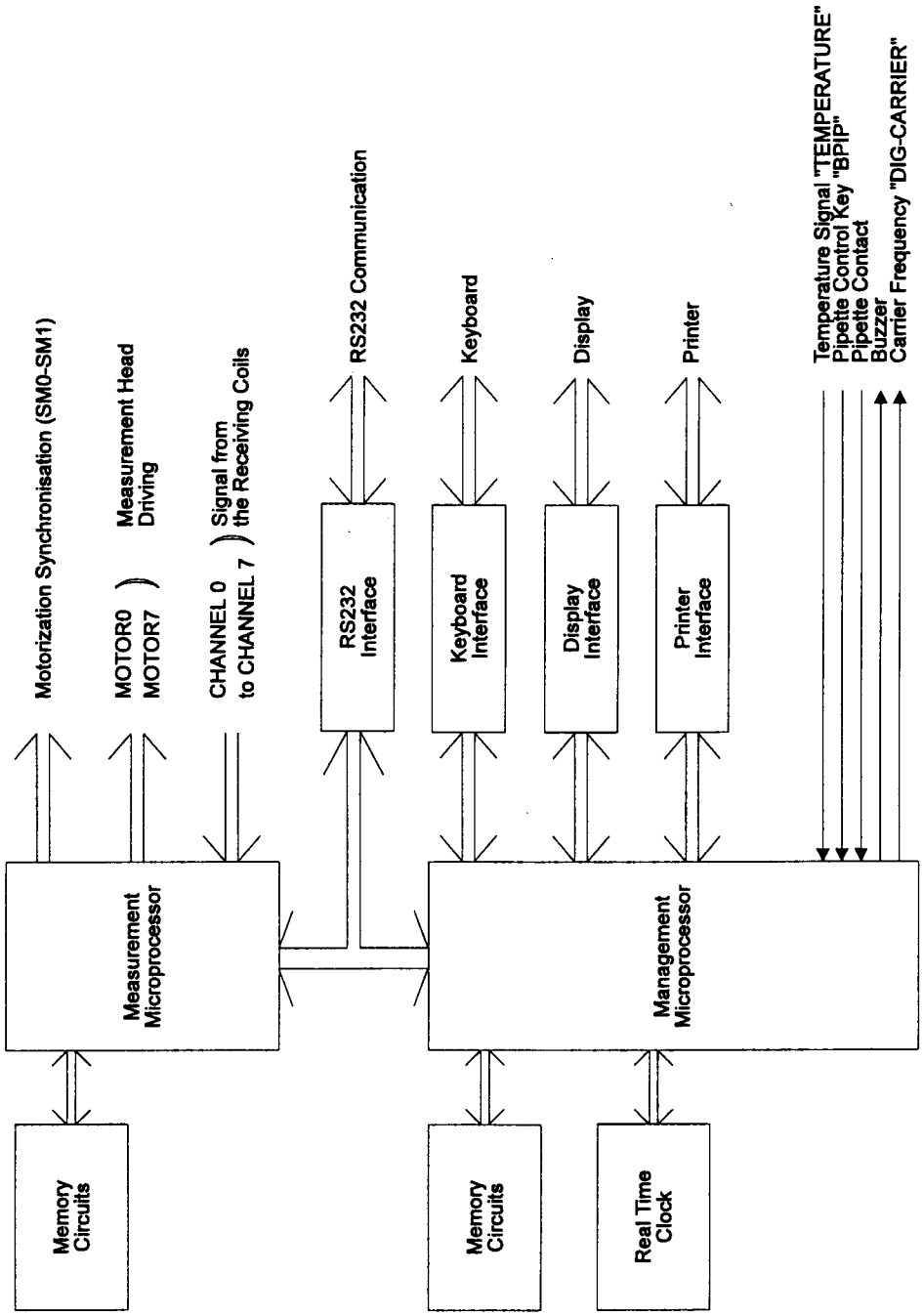

Fig.2 - Mother PC Board - Block Diagram

2.3.1. Temperature Heating/Regulation

Schema of reference	0231053x, page : 2 0231081x, page : 2	(x: current index) (x: current index)

Power supplies	+12V, +24V

FUNCTION:

The temperature regulation part is used:

- to generate the difference ("ECART" signal) between the measured temperature and a given reference;
- to generate a saw-toothed signal;
- to supply the laminar resistor with a 24 V pulse width modulation from the variation between the "ECART" signal and the saw-toothed signal;
- to generate the power supplies necessary to the temperature regulation;
- to generate a voltage proportional to the measured temperature in order to transfer it to the management micropressor for analog-to-digital conversion.

DESCRIPTION

- ***To Generate the "ECART"Signal***

The op-amplifier, IC305, amplifies the variation between the output voltage of the LM35 temperature sensor, IC302, and a reference level given by the R311, R312, R314, R316 resistors and the P301 potentiometer. This potentiometer is used to adjust the reference value. Thus, the "ECART" signal is obtained.

- ***To Generate the Saw-Toothed Signal***

The circuit IC304 supplies a saw-toothed signal with those characteristics:

- period: 3 to 5 sec.;
- level: 1.7 V to 3 V.

- ***To Supply the Laminar Resistor***

The op-amplifier, IC306, compares the "ECART" signal to the saw-toothed signal. At the output of this comparator, fixed frequency peaks can be observed, with a width which is variable depending on the "ECART" signal position with regard to the saw-toothed signal.

Depending on the output voltage of IC306, the optocoupler IC307 allows or does not allow to supply the laminar resistor with 24 V through T302 mos-fet.

To Generate the Power Supplies

From the +12 V supplied by the switching power supply (+5/-12/+12 V), the voltage regulator IC301 generates one "GND_ANALYSIS" middle point. Thus, compared to this "GND_ANALYSIS" middle point, +V and -V are equal to +5 V and -7 V.

- ***"TEMPERATURE" Signal***

The temperature measured by the LM35 the temperautre sensor (IC302) is amplified by the circuit IC303 to be transmitted to the input AN0 of the analog-to-digital converter of the management microprocessor.

Test Point Check-List:

All voltages have to be measured compared to "GND_ANALYSIS".

- **For 37 °C**

  +V = 5 ± 0.2 V

  -V = -7 ± 0.2 V

  PT306 = 395 mV ± 10 mV

  PT308 = depends on the "ECART" signal (around 4 V or around 0.6 V)

  T = 10 mV/°C

  Ecart = amplified variation between PT306 and T

  DS = 1.7 to 3 V (saw-toothed signal)

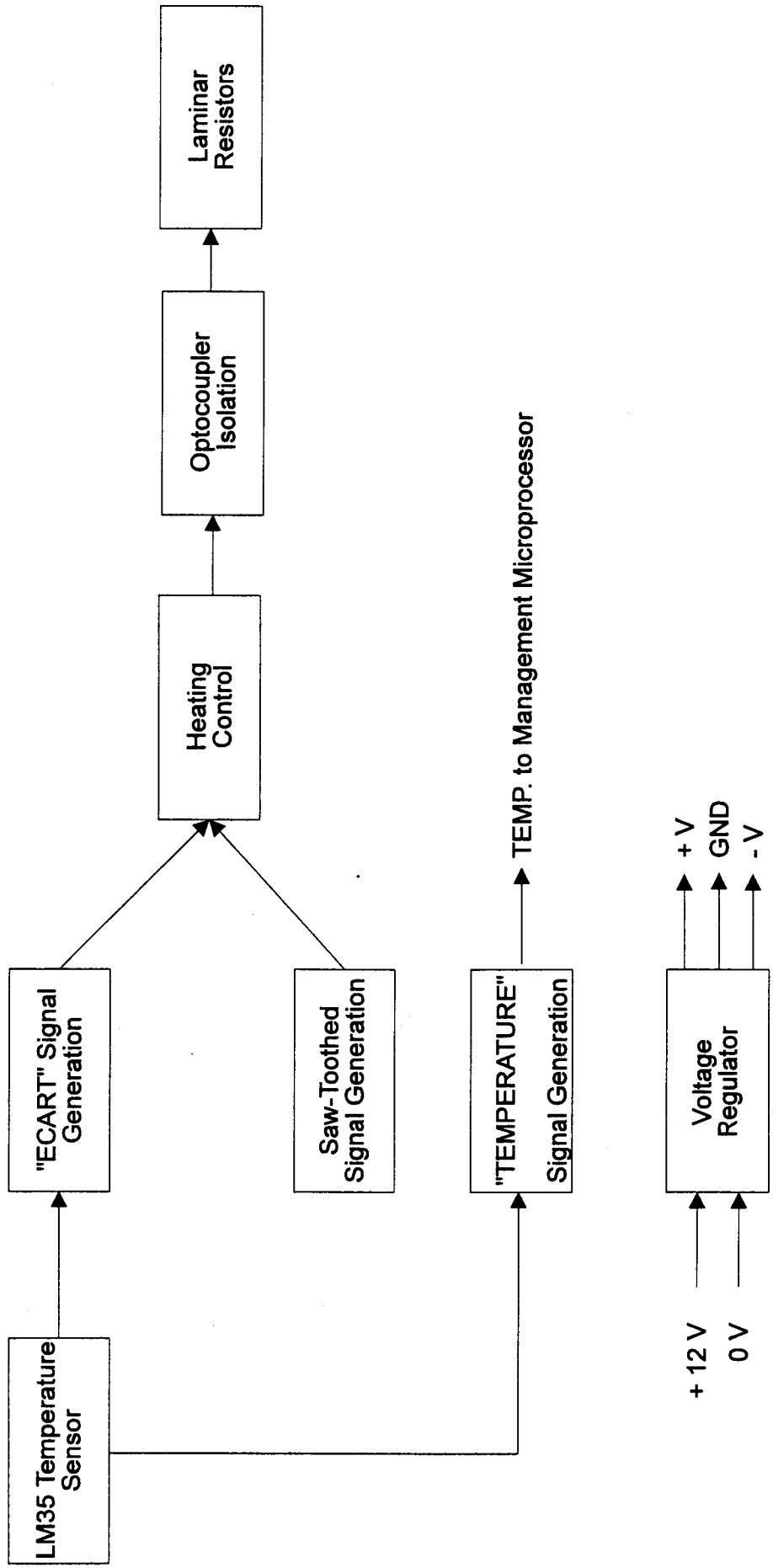

Fig. 3 - Temperature Regulation - Block Diagram

2.3.2. Measurement

Schema of reference	0231053x, page : 4 à 7 (x: current index) 0231081x, page : 4 à 6, 8 et 9 (x: current index)

Poweer supplies	+8V, -8V, +12V

FUNCTION:

The measurement part ensure:

- The interface of the driving control signals for each measurement head;
- The transformation of the carrier frequency emitted by the measurement microprocessor;
- The amplification, filtration and demodulation of signals coming from the receiving coils of each measurement head before transfer to the measurement microprocessor.

DESCRIPTION:

Motorization (driving)

Each measurement head includes 2 driving coils: one left and one right.

Each driving coil is controlled by an arrangement of signals:

- "SM0"and "SM1" common to all measurement heads;
- "MOTORB_x" valid for only one measurement head.

NOR gates (IC6 and IC7 for the 4 channel Mother PC board as well as IC606 and IC607 for the 8 channel Mother PC board) realize these arrangements. Each driving signal is then amplified by inverting drivers (IC5 for the 4 chanel Mother PC board as well as IC605 for the 8 channel Mother PC board).

Carrier Frequency Transformation

The square wave signal from the management microprocessor (DIG_CARRIER) is modified by the IC117 transistors, C46 to C49 capacitors and R91 to R98 resistors for both 4 and 8 channel Mother PC boards, as well as C646 to C649 capacitors and R691 to R698 resistors for the 8 channel Mother PC board.

Processing of the Signals Emitted by the Receiving Coils

The signals obtained on the receiving coils go through a signal processing chain before transfer to the measurement board. The signals undergo, first, a double filtration, then a selective amplification on a given frequency, then a demodulation and finally an amplification to adapt the signal to the level of the A/D converter of the Mother PC board.

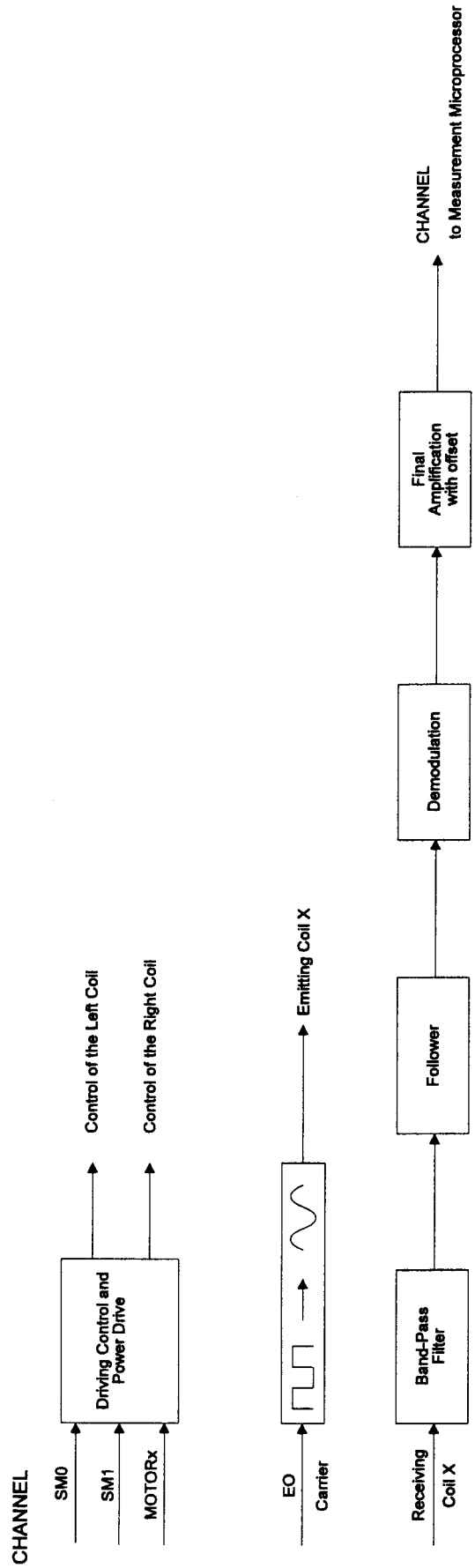

Fig. 4 - Measure - Block Diagram

2.4. Printer Interface

Reference Printer	S-99VC002

Schema of reference	0231053x, page : 8 (x: current index) 0231081x, page : 10 (x: current index)
Quantity	1
Power supply	+5V

FUNCTION:

- To insure the interface between the microprocessor part and the printer.

DESCRIPTION:

This part includes:

- a M50747-500SP microprocessor (IC501) with a 4.91 MHz quartz (XT501);
- inverting drivers (IC509, IC510 and IC511) to control the thermal head and the two motors of the printer;
- a printing pulse width control circuit based on a transistor (T501) and inverters (IC505);
- a latch circuit for the data (IC502) constituted by 8 flip-flop circuits.
- other circuits (IC504, IC505, IC506, IC507) to transmit and to receive the interface signals from the Mother PC board (ACK, PE (paper empty), ERROR...).

For each printed character, there is a 9 x 7 point matrix. For the graphic mode, 9 x 8 point matrixes are used.

The thermal head includes 9 points which are individually checked by the signals "DOT1" to "DOT9".

The signals CM01 to CM04 check the head motor.

The paper feed motor is managed by the signals FW01 to FW04.
There is a feed-back signal from the printer head, the "home position switch" signal (to detect the head home position).

The P501 potentiometer of the printing pulse width control circuit operates on the pulse width and thus changes the contrast of the printed characters.

The data to print are transmitted by the Mother PC board through a latch (IC502) checked by the "STB" (strobe input) signal which indicates that the data can be read by the M50747-500SP microprocessor.

The "STB" signal is also used to control the "BUSY" signal.

The " INIT" signal allows to reset the microprocessor IC501 insuring the printing management.

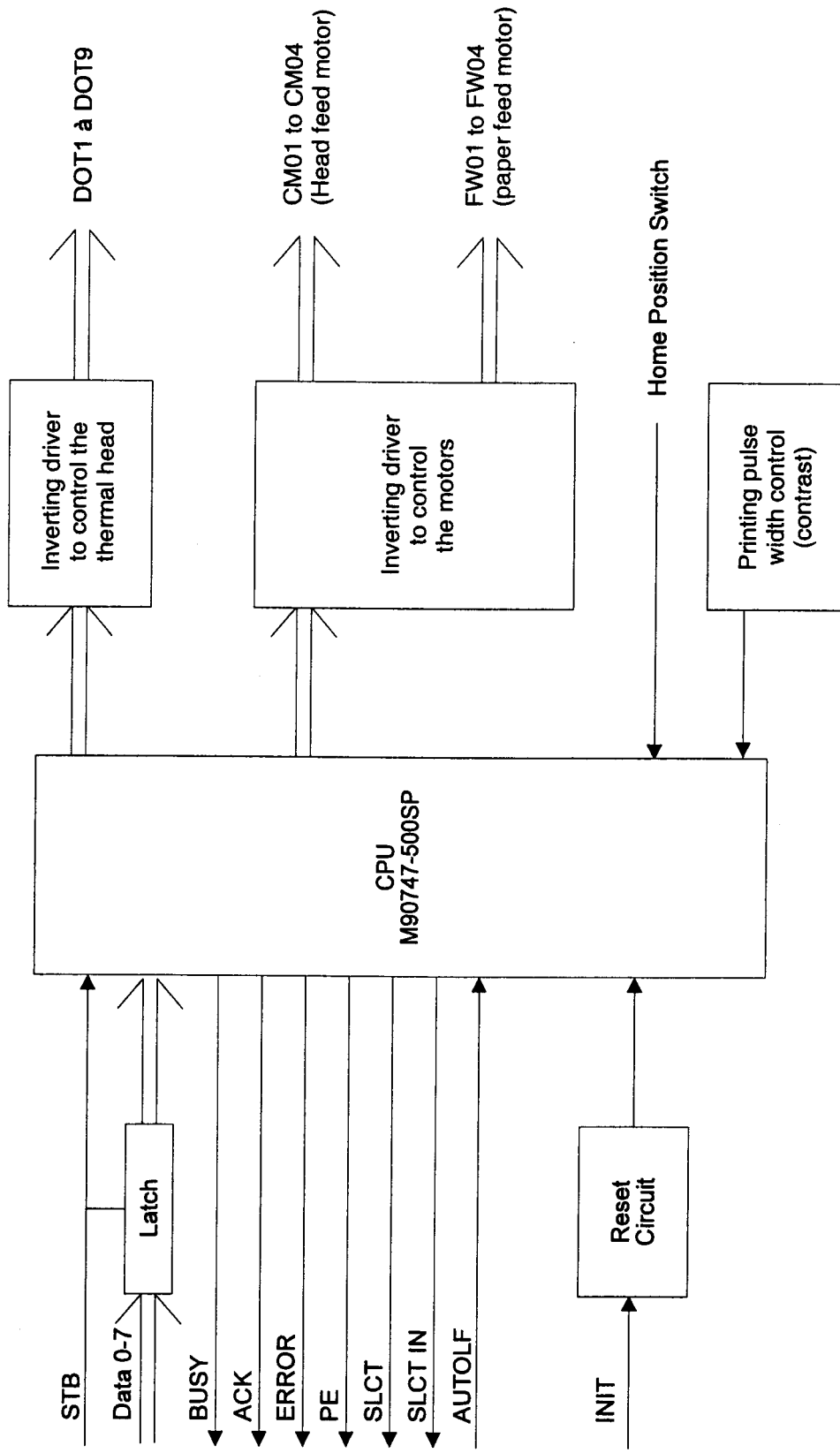

Fig. 5 - Printing - Block Diagram

2.5. Display Interface

Reference Display	S-99VC001

Schema of reference	0231053x, page : 6 (x: current index) 0231081x, page : 7 (x: current index)
Quantity	1
power supply	+12V
Connectors	See Table, below

Connector	To	
Display	**Name**	**Connector**
16 points	Mother Board	J103
Any point	Mother Board(+12V)	J104/J124
Any point	Mother Board (0V)	J114/J134

FUNCTION:

- To insure the interface between the microprocessor part and the display.

DESCRIPTION:

- The display is constituted by 4 lines of 40 characters.

2.6. Keyboard

Reference	S-0231060

Schema of reference	0231060
Quantity	1
Connectors	To J105 Mother PC Board

FUNCTION:

- To support the 21 numerical and function keys of the analytical plate.

DESCRIPTION:

The 16 numerical keys of the keypad and the 4 triggering keys of the timers are arranged as a grid of 4 columns (Xi) and 5 lines (Yj).

On one line, one of the contact of each key is linked in serial with the others. For one column, the other contact of each key is also linked to the others. Thus, when any key is depressed, a couple (Xi, Yj) is selected. These data are then processed by the Mother PC board.

A contact allows to get a low state for the "PIP" signal when the pipette control key is depressed.

	X1	X2	X3	X4
Y1	1	2	3	↵
Y2	4	5	6	
Y3	7	8	9	
Y4	◀	0	•	▶
Y5	CLK1	CLK2	CLK3	CLK4

CLK 1 = Timer 1PIP

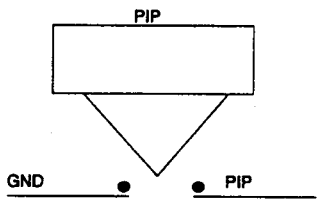

3. INSTALLATION PROCEDURE

3.1. Unpacking and Installation

– **Open** the box, check the components:

- ST art coagulation instrument;
- Dust cover;
- 1 thermal paper roll;
- 2 pipette thermal conductors;
- 1 power cord;
- 1 Operator's Manual (in both French/English);
- 1 booklet on operating procedure;
- 2 reduction rings for 18 mm vial;
- 2 reduction rings for 22 mm vial;
- 2 reduction rings for ∅ 13 mm tube (6 ml tube);
- 1 ball remover;
- 2 magnetic stirring-bars;
- 1 cabled Finpipette®;
- 1 box of cuvette Finpipette® Combitpis (2.5 ml);
- 1 box of cuvette strips;
- 1 ball dispenser;
- 1 ball vial containing approximately 1850 balls;
- 10 fuses (T3A)).

– **Switch** on the instrument;

– **Insert** the paper in the printer and press the key to feed the paper.

3.2. Software Setup

Purpose: To set up the analyser to the lab requirements.
The Setup parameters define:
- the date;
- the time;
- the type of patient identification;
- the type of pipette;
- the ST art station number;
- if the control keys sound or not.

START: As soon as the instrument is powered on, the **Main Menu** is dispayed:

```
                    DIAGNOSTICA STAGO

1 : Test Mode                    2 : Calibration
3 : Test Parameters              4 : System Check
Enter Code Number                :
```

– **Press** the **4** key, then the ↵ key to display the **System Check menu.**

```
                    ***** System Check *****

1 : Setup
2 : Diagnostic Tests
Enter Code Number                :
```

– **Press** the **1** key, then the ↵ key.

```
Date : 07/01/98
Time : 03:33 PM
Patient ID# :    Automatic                          ( ▶ = Chg )
Connected Pipette                                   ( ▶ = Chg )
```

– **Enter** the date: month/day/year.

– **Confirm** with the ↵ key.

– **Enter** the time: hour:minutes.

– **Confirm** with the ↵ key.

– **Select** Automatic or Manual patient identification mode and connected or non connected pipette with the ▶ key.

– **Confirm** each choice with the ↵ key, this will move the cursor over the next parameter:

```
Sound : On                                          ( ▶ = Chg )
Station Number :  3
```

– **Choose** "Sound : On" or "Off" with the ▶ key.

– **Confirm** the choice with the ↵ key, this will move the cursor over the next parameter.

– If the ST art has to be connected (RS232) to an host computer, **enter** the station number defined for this analyser and **confirm** with the ↵ key.

When the option **"Sound : On"** is chosen, each time a key is selected, a beep sounds. This option does not concern in any case the audible alarm generated at the end of the incubation durations.

When no change is needed for a parameter, **press** the ↵ key to move the cursor over the next parameter.
At any time, the key allows to return to the **System Check menu** but in this case, any change not confirmed by the ↵ key will not be saved in memory.

– The **System check** menu is once again displayed:

```
                    ***** System Check *****

1 :  Setup
2 :  Diagnostic Tests
Enter Code Number                    :
```

– **Start** the self-test: **press** the **2** key, then the ↵ key. Then, **press** once again the ↵ key to start the self-test.

The following parts are tested one after each other:

- The printer: all the available characters are printed;

  Example of the result of the printer self-test that you should get:

```
 !"#$%&'()*+,-./0123456789:;<=>?àABCDEFG
HIJKLMNOPQRSTUVWXYZ°¢§^_`abcdefghijklmno
pqrstuvwxyzéùè
```

- The keyboard: you are asked to **press** each key one after each other, **starting** with the control key of the first timer (A) on the left side;

- The RAM circuit (automatic);

- The NOVRAM circuit (automatic);

- The display; you are asked to look at the display -all dots should be black;

- The pipette (if a connected pipette is used): you have to depress once the pipetting lever;

- The RS232 interface (automatic).

After each test, and if this one is correct, **"Test OK"** is diplayed. **Press** the ↵ key to start the next one.
If the test is not correct (no printing, no answer from the keyboard control keys), when the element is repaired or replaced, start once again the self-test.

Note: It is possible to override the keyboard test with the key.

– **Check** the temperature according to the procedure QC-ST4-014.

– **Enter** the **Analysis menu** (the analysis procedure is described in chapter 5 of the ST art Operator's Manual). **Check** that the four timers are operating correctly.
Place a strip in which each cuvette is filled with 300 µl of distilled water in measurement zone, simulate PT operating tests by removing the strip after at least 12 sec.. The clotting times have to be displayed and the results in units have to be printed (this will only occur if a calibration curve has been previously entered in memory).

4. MAINTENANCE

Follow this maintenance procedure once each year:

☞ **Caution!** Observe the proper precautions for handling biohazardous material in accordance with local existing regulations: **use disposable gloves**.

- **Clean** the work surface and each reagent storage position with absorbent paper soaked in warm water;
- **Clean** each well of the measurement zone and of the incubation zone and each pipette well with cotton-tipssoaked in warm water;
- **Clean** each thermal conductor with a bleach solution (a 1:10 dilution of 5% sodium hypochlorite), then rinse and dry;

☞ **Caution!** If plasma or product vial (reagent, control, calibrator, dilution buffer) has been split or broken, clean the instrument and the thermal conductors with a 1:10 dilution of 5% sodium hypochlorite, then rinse and dry them.

- **Check** the temperatures following the procedure QC-ST4-014;
- **Perform** the temperature adjustment (and the temperature calibration for the measurement zone) if necessary *(the procedure is described in chapter 6.1 of the ST art Service Manual);*
- **Run** a self-test *(the procedure is described in chapter 3.4 of the ST art Service Manual);*
- If the printed characters are too light, **perform** the contrast adjustment *(the procedure is described in chapter 6.1.2. of the ST art Service Manual).;*
- If necessary, **change** the fan filter (the filter change periodicity depends of the environnement if the instrument is fitted with)

☞ **WARNING!** For the instrument ST art 4 No.24 - 29 - 36 - 37 - 39 - 41 - 46 - 48 - 49 - 53 and from the No.55, the filter has been suppressed.

5. TROUBLESHOOTING GUIDE

5.1. Display

- ***Display off, no reagent stirring, no beep (keyboard keys) ...***

Probable Cause(s)	Diagnostic Procedure(s)	Possible Solution(s)
◻ The mains fuses have burned out.	◻ Check the voltage at the mains filter input (115 or 230 VAC).	◻ Change the 2 fuses.
◻ Defective mains filter.	◻ Check the voltage at the mains filter output.	◻ Change the mains filter.
◻ Defective switching power supply (+5/-12/ +12V)		◻ Change the switching power supply (+5/ -12/+12V).

- ***Display off completely or partly ; difficult reading***

Probable Cause(s)	Diagnostic Procedure(s)	Possible Solution(s)
◻ Display bad connection on the Mother PC board.	◻ Check the connection.	◻ Put back in place the display.
◻ Defective display.	◻	◻ Change the display.
◻ Defective Mother PC board.	◻	◻ Change the Mother PC board.

5.2. Keyboard

- ***The keyboard keys and/or the pipette control key and the timer keys not functionning***

Probable Cause(s)	Diagnostic Procedure(s)	Possible Solution(s)
◻ Bad connection between the keyboard board and the Mother PC board.	◻ Check the connection.	◻ Put back in place the cable.
◻ Defective keyboard.	◻	◻ Change the keyboard.
◻ Defective Mother PC board.	◻	◻ Change the Mother PC board.

5.3. Printer

- ***No possible printings***

Probable Cause(s)	Diagnostic Procedure(s)	Possible Solution(s)
◻ Defective printer.		◻ Change the printer block.
◻ Defective Mother PC board.		◻ Change the Mother PC board.

- ***Part of the characters missing***

Probable Cause(s)	Diagnostic Procedure(s)	Possible Solution(s)
◻ Defective printer.		◻ Change the printer.

- ***Printed characters very light***

Probable Cause(s)	Diagnostic Procedure(s)	Possible Solution(s)
◻ Poor contrast adjustment.		◻ Adjust the P501 potentiometer of the printer (see page 6.1. of the Service Manual). Change the Mother PC board

5.4. Ball Swing

- ***No ball swing for all the measurement wells***

Probable Cause(s)	Diagnostic Procedure(s)	Possible Solution(s)
◻ Defective Mother PC board.		◻ Change Mother PC Board.

- ***No swing for one or several measurement wells***

Probable Cause(s)	Diagnostic Procedure(s)	Possible Solution(s)
◻ No driving signal.		◻ Change the Mother PC Board.
◻ Defective measurement head.		◻ Change the measurement head.

- ***No ball swing for all the measurement wells and no temperature regulation***

Probable Cause(s)	Diagnostic Procedure(s)	Possible Solution(s)
◻ No 12 V power supply	◻ Check the voltage between AGND and +12V.	◻ Change the switching power supply (+5/ -12/+12V).
◻ Defective Mother PC Board.		◻ Change Mother PC Board.

5.5. Reagent Stirring

- ***No Reagent Stirring and no temperature regulation***

Probable Cause(s)	Diagnostic Procedure(s)	Possible Solution(s)
◻ +24V switching power supply defective.	◻ Check the voltage at the terminals of the (+24V) switching power supply.	◻ Change the switching power supply (+24V).

- ***No Reagent Stirring (37°C and/or room temperature zones)***

Probable Cause(s)	Diagnostic Procedure(s)	Possible Solution(s)
◻ Motor power supply wire (s) unsoldered.	◻ Ckeck the motor power supply voltage at the 2 weld points from motor power supply wire (s).	◻ Resolder the motor wire (s).
◻ Defective motors or magnet supports unstuck, missing magnets.		◻ Change the motor.

5.6. Measurement

- ***No measure for one or several wells or aberrant measures***

Probable Cause(s)	Diagnostic Procedure(s)	Possible Solution(s)
◻ No ball swing or disymmetric ball swing		◻ See ball swing troubleshooting section.
◻ Defective measurement head.		◻ Change the measurement head.
◻ Defective Mother PC board.		◻ Change the Mother PC board.

- ***No measure for every well***

Probable Cause(s)	Diagnostic Procedure(s)	Possible Solution(s)
◻ No +8 V, nor -8 V voltages.	◻ Check presence of +8 V (pins 2.3 from IC 123) and -8 V (pins 1-3 from IC 124) on the Mother PC board.	◻ Change the Mother PC board.

5.7. Temperature

- ***No temperature regulation***

Probable Cause(s)	Diagnostic Procedure(s)	Possible Solution(s)
◻ Switching power supply (+5/-12/+12V) defective.	◻ Check the voltage between AGND and +12V then between DGND and +5V.	◻ Change the switching power supply (+5/-12/+12V).
◻ Switching power supply +24V defective.	◻ Check the voltage between DGND and +24V.	◻ Change the switching power supply +24V.
◻ Defective temperature sensor (LM35 component).		◻ Change the LM35 component.
◻ Defective Mother PC Board.		◻ Change the Mother PC Board.

- ***The displayed temperature is wrong but the measured one is correct***

Probable Cause(s)	Diagnostic Procedure(s)	Possible Solution(s)
◻ Incorrect temperature calibration.		◻ Go through the temperature calibration *(see page 6.2. of the Service Manual).*
◻ Defective Mother PC board.		◻ Change the Mother PC board.

5.8. Pipette

- ***No more pipette detection (connected pipette)***

Probable Cause(s)	Diagnostic Procedure(s)	Possible Solution(s)
▫ The pipette socket is broken.	▫ Check the contact at J112, Mother PC board between pin 1 and pin 3.	▫ Change the pipette socket.
▫ Defective pipette	▫ Operate the pipette in "non-connected" mode	▫ Change the pipette
▫ Defective Mother PC Board.		▫ Replace the Mother PC Board.

6. ADJUSTMENTS

6.1. Electronic Adjustments

☞ **WARNING!** These adjustments have to be performed without the upper cover and with the analyser switched on. Accordingly, the security procedures should be strictly observed.

6.1.1. Temperature Reference on the Mother PC Board

- ***Intrument opened with power on***

– **Adjust** the P301 potentiometer so that the measured voltage between the points PT306 and GND_ANALYSIS is equal to 395mV (pre-adjustment value).

- ***Intrument closed with power on***

– **Wait** the 30 minute warm-up duration of the instrument, then, **check** the temperature following the procedure QC-ST4-014. **Improve** the adjustment if necessary.

– **Use** the procedure described in chapter 6.3.2. of the ST art Service Manual to enter in memory this new temperature calibration.

6.1.2. Printing Contrast

- ***Intrument closed with power on***

– **Adjust** the contrast with the P501 potentiometer (behind the instrument) so that the printer characters are readable.

Note: Do not increase too much the adjustment, otherwise the life time of the thermal head will be shortened.

6.2. Mechanical Adjustments

No adjustment.

6.3. Software Adjustments

All these adjustments should be performed when the NOVRAM circuit (IC109) is changed.

6.3.1. Channel Calibration

As each measurement head forms an independent system, the level of the signal obtained on each of them may be different. This procedure allows to save in memory the data corresponding to the signal level of each head. It should be performed if one of these components is changed: the NOVRAM circuit, the measurement board, the measurement block.

START: From the **Main Menu**.

```
                    DIAGNOSTICA STAGO
1 : Test Mode                2 : Calibration
3 : Test Parameters          4 : System Check
Enter Code Number              :
```

– **Press** the **4** key, then the ↵ key.

```
                    ***** System Check *****
1 : Setup
2 : Diagnostic Tests
Enter Code Number:
```

– To display the diagnostic special procedures, **press** the **2** key, then the ↵ key. **Type** the password, then **confirm** with the ↵ key.

```
                          1:  Parameters
Calibration             ▶ 2:  Temperature
                        ▶ 3:  Channel
Enter Code Number:      ▶ 4:  Motorization
```

– **Press** the **3** key, then the ↵ key.

```
Insert Cuvette Strip Filled with Water
and Press ENT when Ready
```

– **Fill** each cuvette of a strip with 300 µl of distilled water, be careful of not bubbling, **dispense** one ball in each cuvette and **place** this strip in the measurement zone.

– **Press** the ↵ key to start the calibration. This one is automatic; the balls oscillate and the measures are registered.

– At the end of the calibration, the choice between the different special procedures is once again displayed.

```
                          1 :  Parameters
Calibration             ▶ 2 : Temperature
                        ▶ 3 :  Channel
Enter Code Number:      ▶ 4 :  Motorization
```

6.3.2. Temperature Calibration

Once the temperature has been adjusted to 37 °C, the temperature calibration is used to save in memory the value corresponding to the analog-to-digital conversion of the signal measured by the temperature sensor for 37 °C. This calibration should be performed if one of these components is changed: the NOVRAM circuit, the measurement block the Mother PC board, the heating PC board, the temperature sensor (LM35 component) or in case of software adjustment loss.

START: From the **Main Menu.**

```
                    DIAGNOSTICA STAGO
1 : Test Mode                  2 : Calibration
3 : Test Parameters            4 : System Check
Enter Code Number                :
```

– **Press** the **4** key, then the ↵ key.

```
          *****   System Check   *****
1 : Setup
2 : Diagnostic Tests
Enter Code Number                :
```

– To display the diagnostic special procedures, **press** the **2** key, then the ↵ key. **Type** the password, then **confirm** with ↵ key.

```
                          1 : Parameters
Calibration             ▶ 2 : Temperature
                        ▶ 3 : Channel
Enter Code Number:      ▶ 4 : Motorization
```

– **Press** the **2** key, then the ↵ key.

```
Press ENT when Temperature = 37°C
```

– **Check** that the temperature is equal to 37 °C ± 0.5 °C in the cuvette inserted in measurement zone, then **press** the ↵ key.

```
Press ENT when Temperature = 37°C
Press ENT if OK
                          37.0°C
```

– The temperature is displayed in the down right side, **confirm** with the ↵ key if the value is correct.
The choice between the special procedures is once again displayed, **leave** this menu with the key.

6.3.3. Motorization Calibration

This calibration allows to compensate the eventual differences of driving between the measurement heads. It should be performed if one of these components is changed: the NOVRAM circuit, the measurement block, the Mother PC board, one or more measurement loads.

Start: From the **Main Menu**.

```
                    DIAGNOSTICA STAGO
1 : Test Mode                  2 : Calibration
3 : Test Parameters            4 : System Check
Enter Code Number:
```

– **Press** the **4** key, then the ↵ key.

```
                    ***** System Check *****
1 : Setup
2 : Diagnostic Tests
Enter Code Number:
```

– To display the diagnostic special procedures, **press** the **2** key, then the ↵ key. **Type** the password, then **confirm** with the ↵ key.

```
                                1 : Parameters
Calibration                   ▶ 2 : Temperature
                              ▶ 3 : Channel
Enter Code Number:            ▶ 4 : Motorization
```

Press the **4** key, then the ↵ key to start the procedure.

- ***4/8 channels:***

```
                    Motorization Calibration
Strike a key to stop
```

– **Strike** a key to stop the calibration.

– At the end of the calibration, the choice between the different special procedures is once again displayed:

```
▶                               1 : Parameters
  Calibration                 ▶ 2 : Temperature
                              ▶ 3 : Channel
Enter Code Number:            ▶ 4 : Motorization
```

7. DISASSEMBLY AND REASSEMBLY

Preliminary operations:

- **Switch Off** the instrument and remove the power cord;
- **Disconnect** the host computer cables if necessary;
- **Remove** all the accessories or cuvettes (paper, pipette, thermal conductors, ball dispenser);
- **Proceed** to the decontamination of the instrument.

7.1. Remove the lower cover

Ref.: S-0032405

- **Turn** upside down the instrument;
- **Unscrew** the feet and remove them;
- **Remove** the 5 fixation screws ("**A**" mark, Fig. 1);
- **Return** the instrument;
- **Lift** the upper part to release the lower cover;
- **Disconnect** the fan from the Mother PC board.

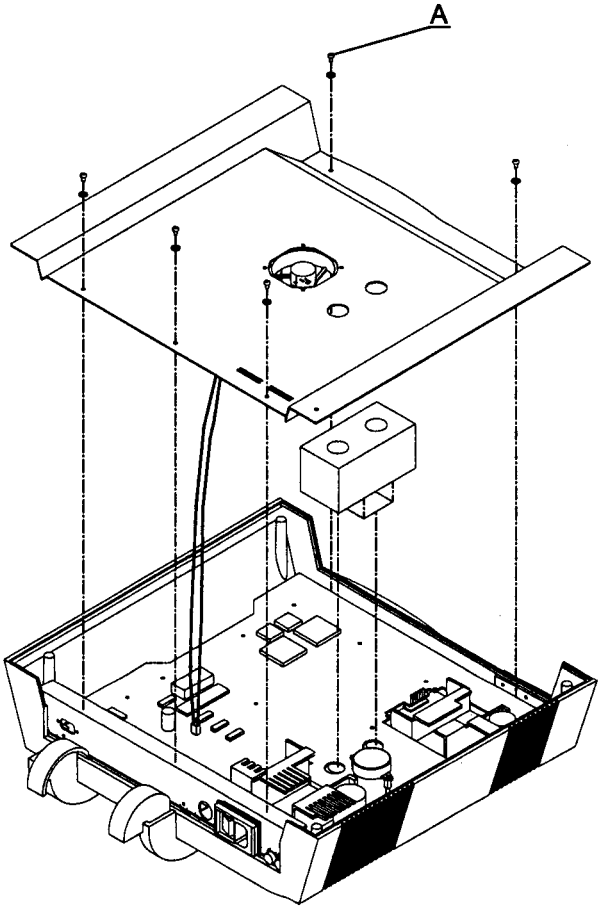

Fig. 1 - Lower cover

7.2. Remove the upper cover

Ref.: S0021062 - 4 channels/upper cover
Ref.: S0021068 - 8 channels/upper cover

- **Remove** first the lower cover,
- **Turn** upside down the instrument;
- **Lift** the keyboard cable connector (**"B"** mark, Fig. 2) to release the cable then remove this cable;
- **Remove** the 11 fixation screws (**"C"** mark, Fig. 2) of the equipped Mother PC board;
- **Release** the Mother PC board and recover the upper cover.

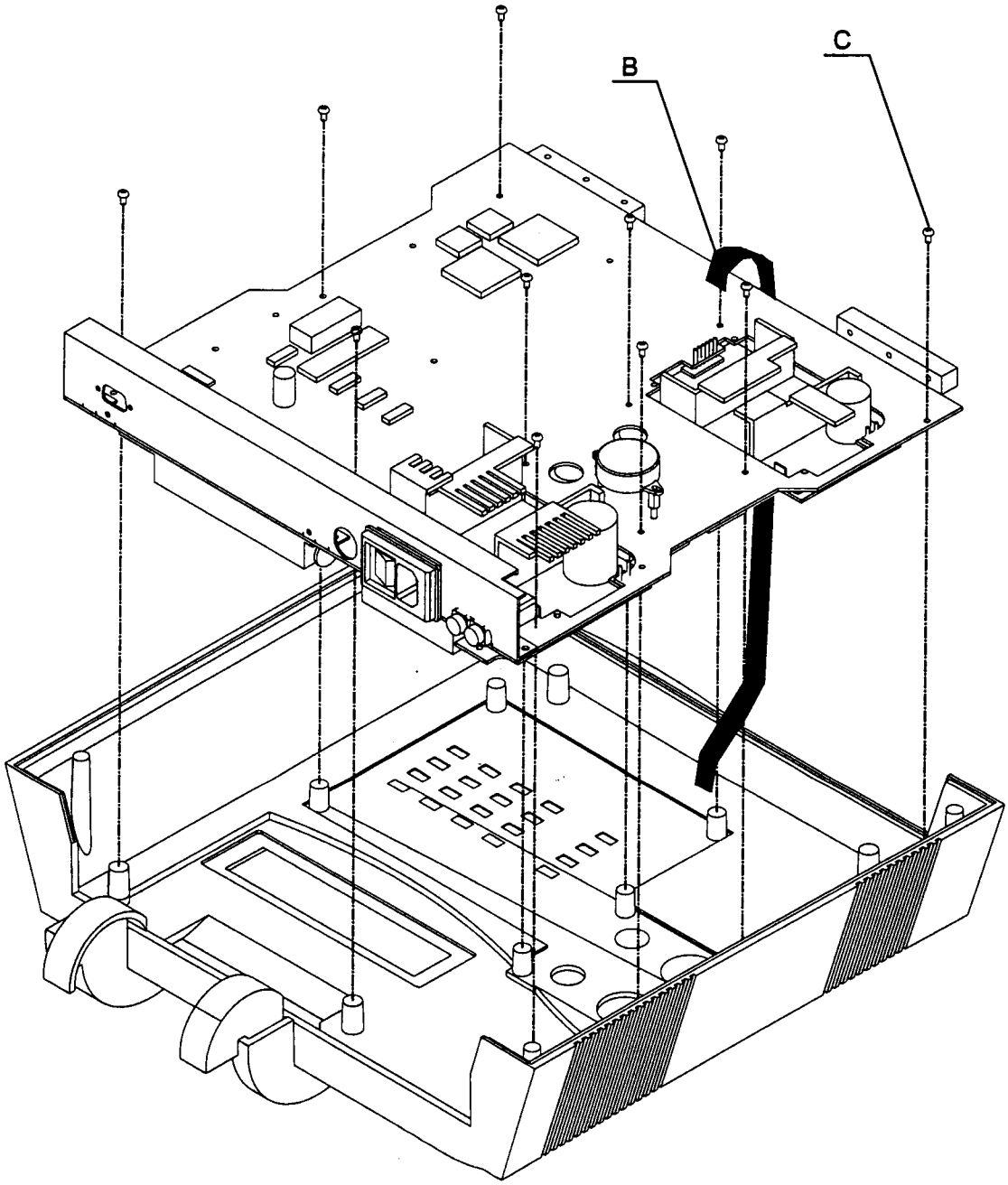

Fig. 2 - Upper cover

7.3. Remove the Mother PC board

7.3.1. LCD display

Ref.: S-99VC001

- **Remove** the 4 fixation screws ("**D**" mark, Fig. 3);
- **Remove** the LCD display.

☞ **Verification** When the LCD display is changed and the instrument is reassemblied, access to the "Diagnostic Tests" to check the correct operation of the LCD display.

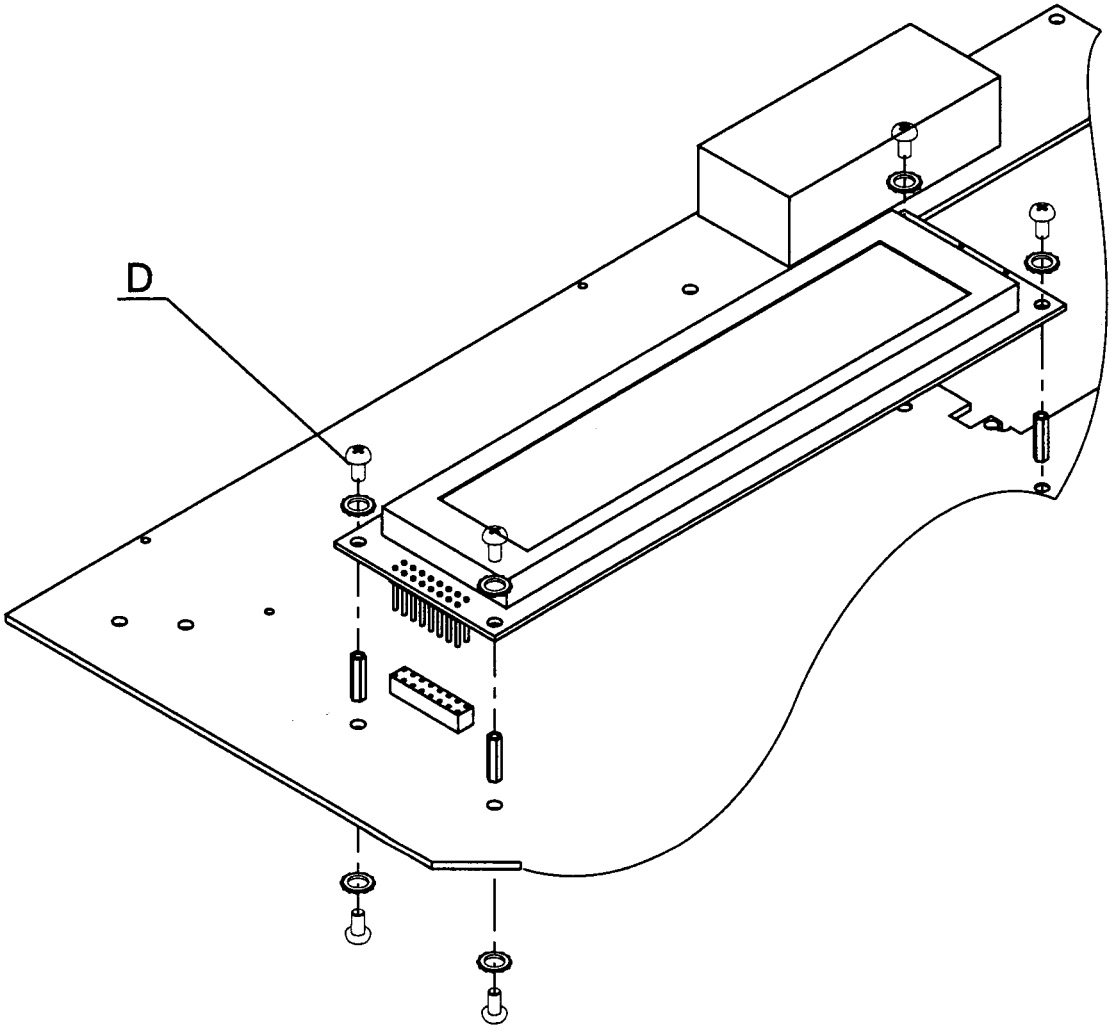

Fig. 3 - LCD display

7.3.2. Thermal printer

Ref.: S-99VC002

- **Release** the connectors;
- **Remove** the 2 fixation screws ("**E**" mark, Fig. 4) and release the printer to the top then slide it to the back.

☞ **Verification** When the printer is changed and the instrument is reassemblied, access to the "Diagnostic tests" to check the correct operation of the printed then, print a calibration curve, adjust the printing contrast if necessary *(refer to chapter 6 page 1).*

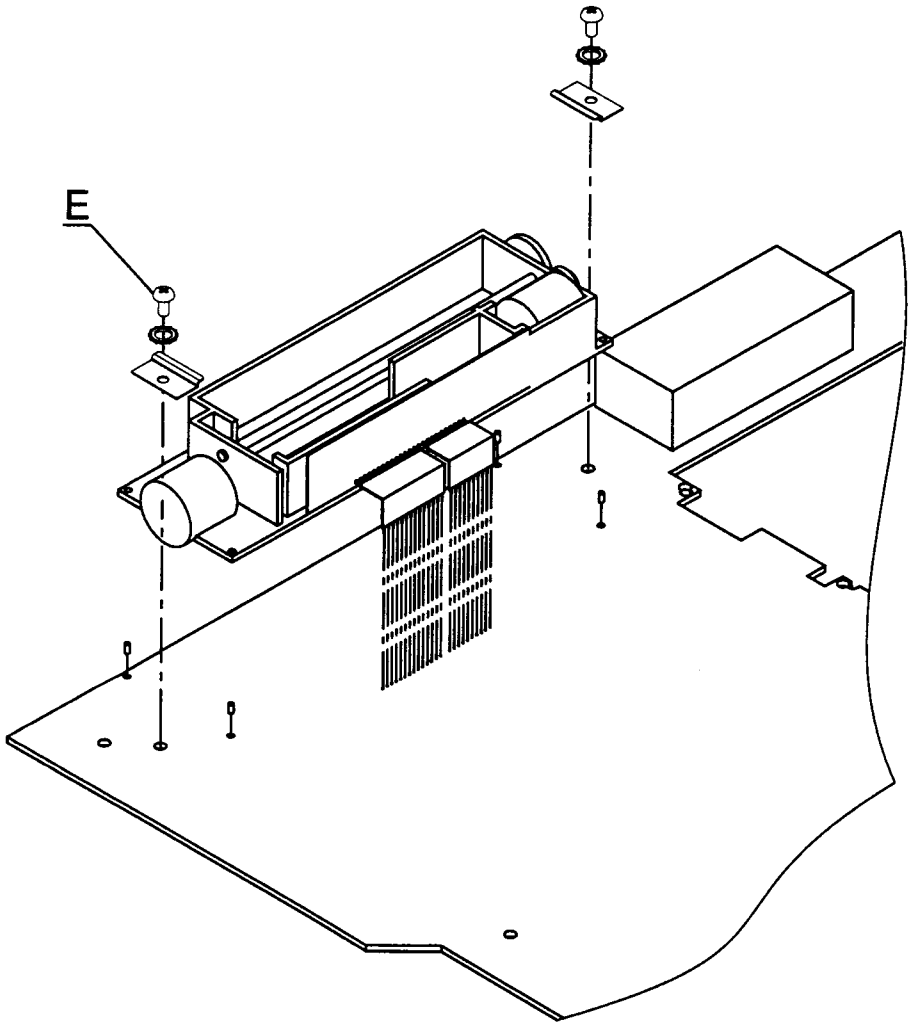

Fig. 4 - Printer

7.3.3. Thermal protection

Ref.: S-0301234

- **Remove** the thermal protection cover screws to release it;
- **Unsolder** the thermal protection.

☞ **WARNING!** Apply a thermal grease when replacing the thermal protection to be sure that the thermal conduction between the thermal protector and the measurement block is correct.

☞ **Verification** When the thermal protection is changed, wait the 30 minute warm-up duration of the instrument, then check the temperature following the procedure QC-ST4-014. Adjust and calibrate the temperature if necessary then start biological tests.

7.3.4. Measurement block

Ref.: S-0012524: 4 channels / measurement block

Ref.: S-0012523: 8 channels / measurement block

Preliminary operation: Remove the stirring motor and its spacers.

- **Remove** the 5 fixations screws ("**F**" mark, Fig. 5).

☞ **Verification** When the measurement block is changed and the instrument is reassemblied , wait the 30 minute warm-up duration of the instrument and check the temperature following the procedure QC-ST4-014. Adjust and calibrate the temperature if necessary then start biological tests.

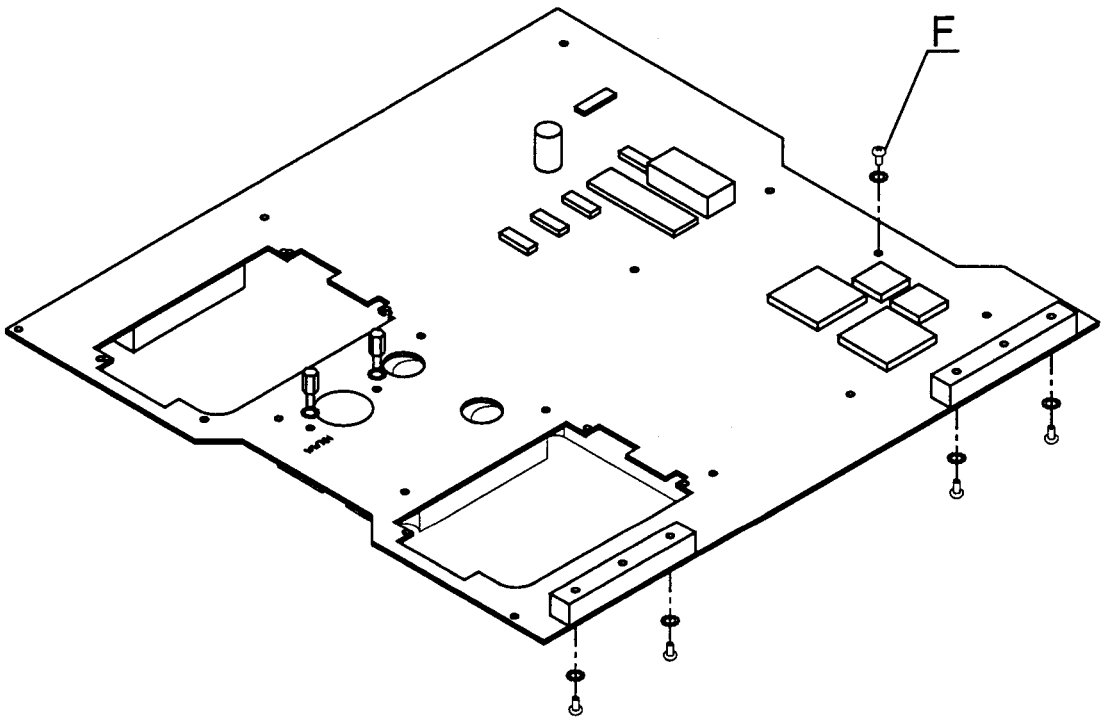

Fig. 5 - Measurement block

7.3.5. Measurement head

Ref.: S-0231079

Preliminary operation: Remove the measurement block.

- **Remove** the measurement head.

☞ **WARNING!** Apply a thermal grease under the measurement head when changing it to be sure that the thermal conduction between the measurement head and the heating board is correct.

☞ **Verification** When the measurement block is changed and the instrument reassemblied wait the 30 minute warm-up duration of the instrument, then check the temperature following the procedure QC-ST4-014. Adjust and calibrate the temperature, proceed to the channels calibration *(refer to chapter 6, page 1)*, make the paper clip test and start biological tests.

7.3.6. Heating board

Ref.: S-0231054: 4 & 8 channels / heating PC board

Preliminary operation: Remove the measurement block and the measurement heads.

- **Turn** the Mother PC board upside down;
- **Unsolder** the board on a level with R322 mark (see figure 6)
- **Return** the board and **remove** the heating PC board.

☞ **WARNING!** Apply a thermal grease on a level with the LM35 component when changing the heating PC board to be sure that the thermal conduction between the component and the measurement block is correct.

☞ **Verification** When the heating board is changed, and the instrument is reassemblied wait the 30 minute warm-up duration of the instrument, then check the temperature following the procedure QC-ST4-014. Adjust and calibrate the temperature if necessary and start biological tests.

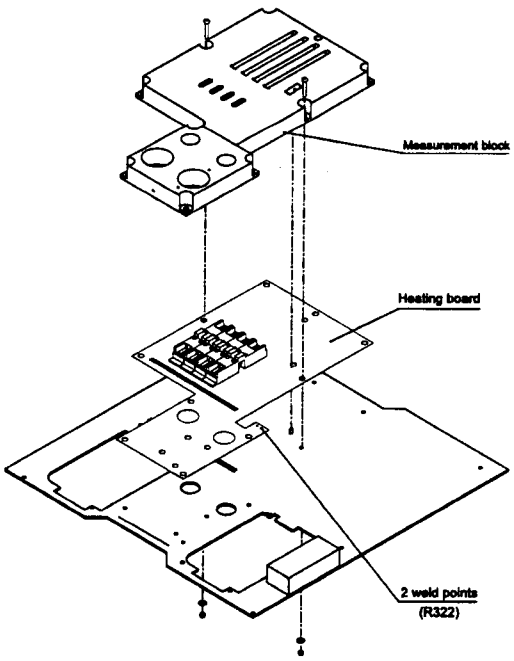

Fig. 6 - Heating PC board

7.3.7. LM35 component

Ref.: S-41001028

Preliminary operation: Remove the measurement block and the measurement heads.

- **Remove** the thermal grease of the heating PC board using an absorbent paper.

☞ **WARNING! It is highly recommenced to use gloves.**

- **Edge** the heating PC board to access the LM35 component;
- **Remove** the thermal grease from the LM35 component and from the Mother PC board;
- **Turn** upside down the board and unsolder the component.

☞ **WARNING!** When replacing the LM35 component and when the heating PC board is again placed, apply a thermal grease on a level with the LM35 component to be sure that the termal conduction between this component and the measurement block is correct.

☞ **Verification** When the LM35 component is changed and the instrument is reassemblied, wait the 30 minute warm-up duration of the instrument, then check the temperature following the procedure QC-ST4-014. Adjust and calibrate the temperature if necessary and start biological tests.

7.3.8. RS232 cable

Ref.: S-0254073

- **Remove** the cable from the Mother PC board;
- **Disconnect** the 2 connector nuts (**"G"** mark, Fig. 7).

☞ **Verification** When the RS232 cable is changed, check that the data transmission to the host computer is correct.

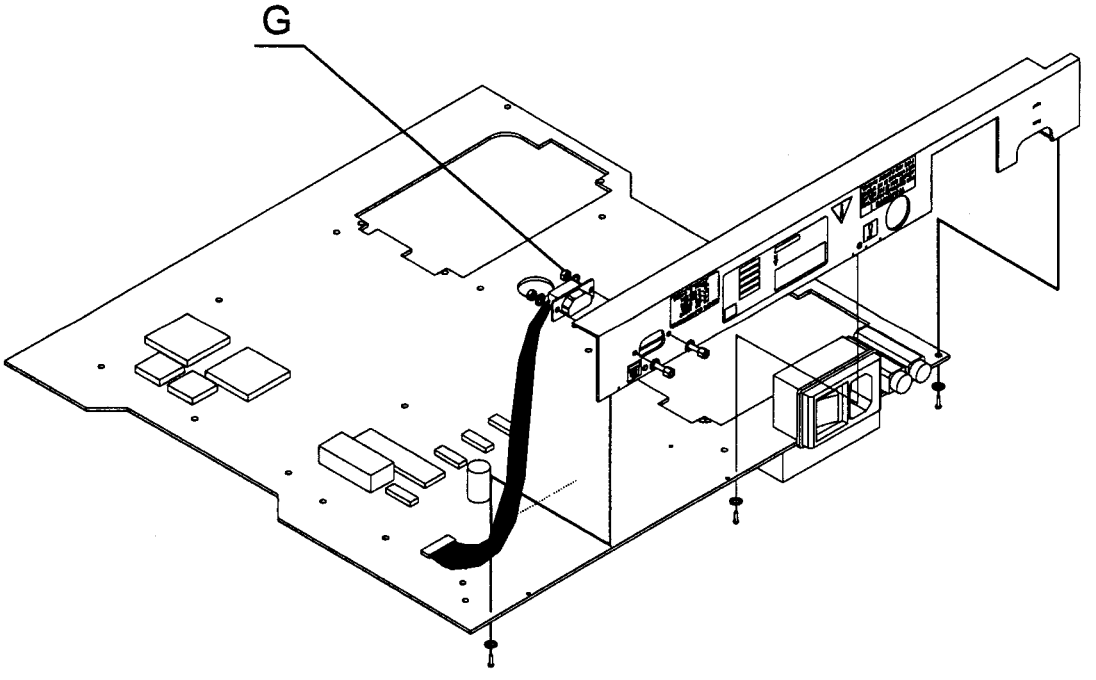

Fig. 7 - Rear cover

7.3.9. Mains filter

Ref.: S-0301256

- **Unsolder** the filter and remove it.

7.3.10. Mains block

Ref.: S-0301263

Preliminary operation: Remove the rear cover.

- **Disconnect** the RS232 cable and **remove** the mains block.

7.3.11. Pipette socket

Ref.: S-0246016

☞ **Verification** When the socket is change and the instrument is reassemblied, simulate a reagent distribution then start biological tests.

- **Unsolder** the pipette socket (7 weld points).

7.3.12. Fuse holder

Ref.: S-0301041

Preliminary operation: Remove the rear cover and **disconnect** the RS232 cable.

- **Remove** the fuse-holder;
- **Unsolder** the fuse-holder.

7.3.13. +24V power supply

Ref.: S-0301257

- **Unscrew** the power supply;
- **Unsolder** the power supply (9 weld points, Fig. 8).

7.3.14. +5/+12/-12V power supply

Ref.: S-0301258

- **Unscrew** the power supply;
- **Unsolder** the power supply (9 weld points, Fig. 8).

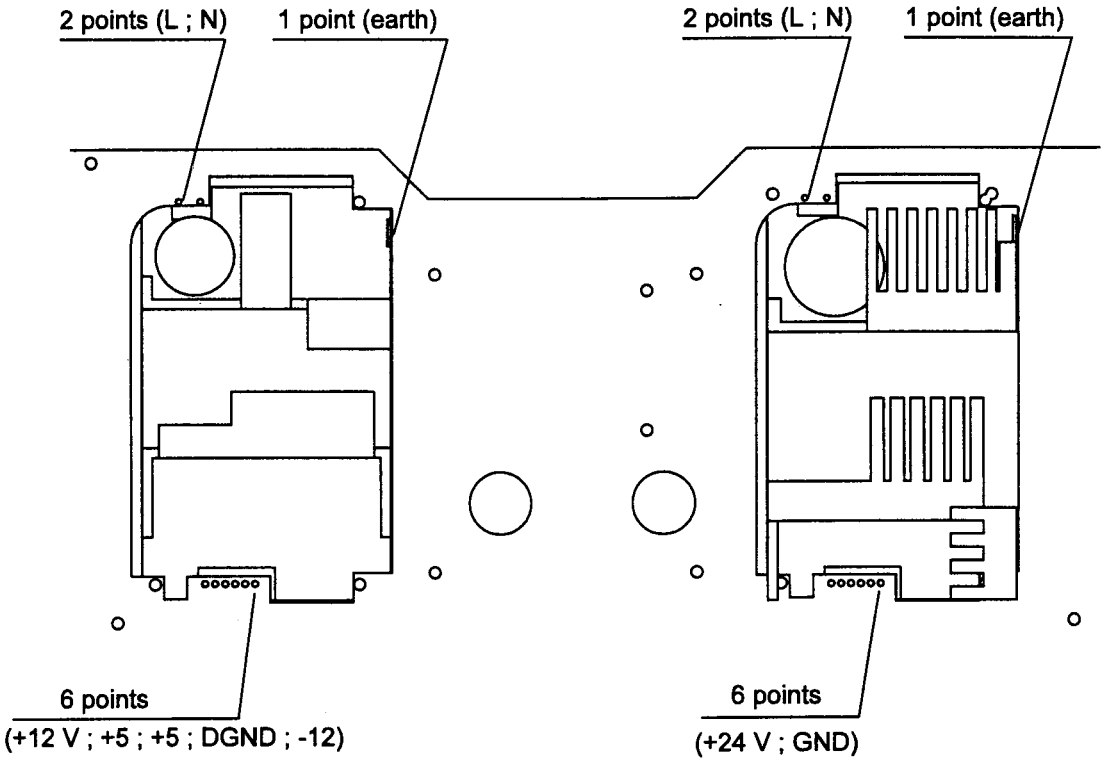

Fig. 8 - Power supply weld points

7.3.15. Battery

Ref.: S-0301248

- **Unsolder** the battery (3 weld points).

8. ELECTRONIC SCHEMATICS AND COMPONENT LAYOUTS

8.1. Mother PC Board

8.1.1. Electronic Schematic for 4 Channel Version

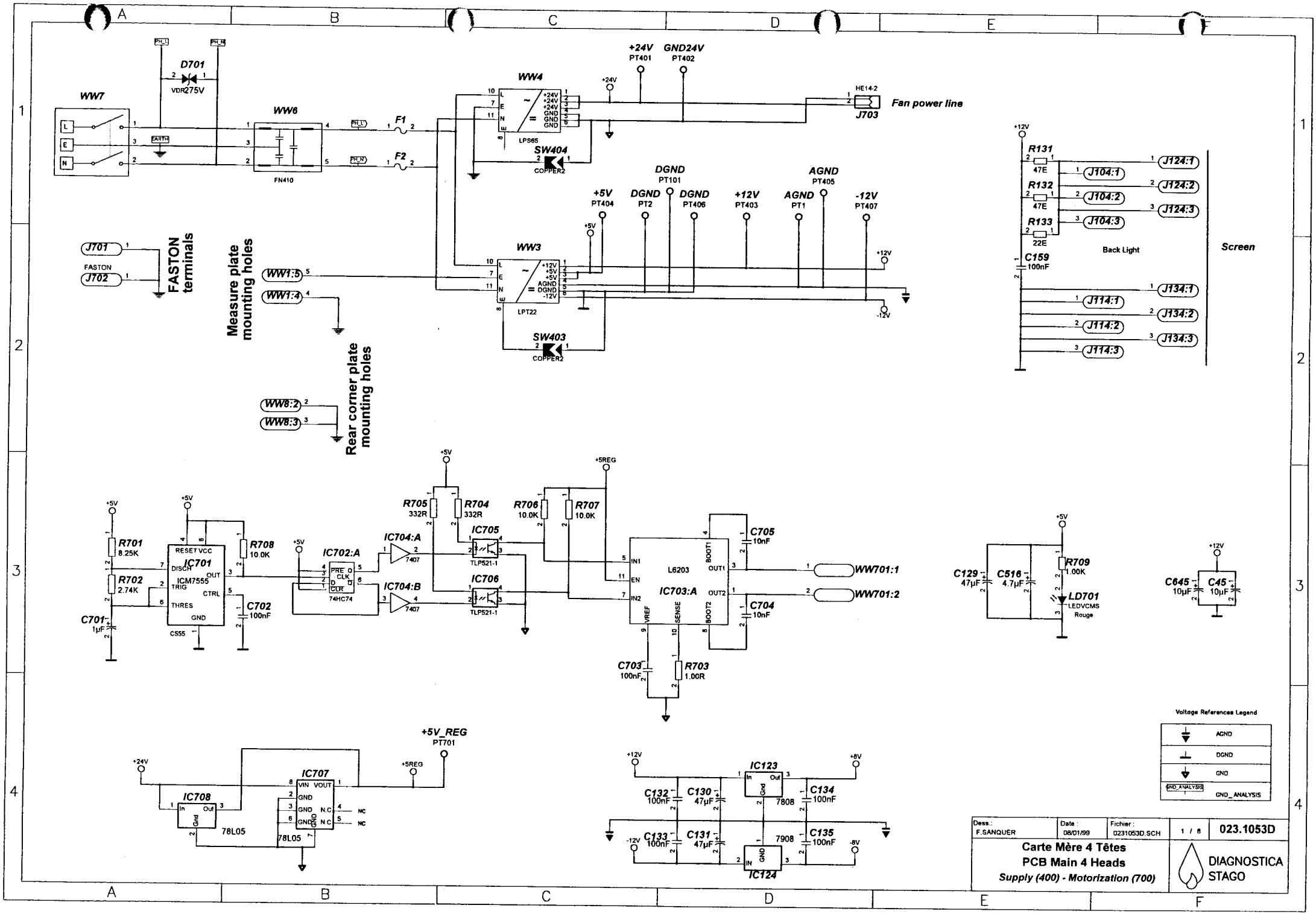
WW7
D701
VDR275V
WW6
FN410
F1
F2
WW4
LPS65
SW404
COPPER2
+24V PT401
GND24V PT402
HE14-2
J703
Fan power line
DGND PT101
+5V PT404
DGND PT2
DGND PT406
+12V PT403
AGND PT405
AGND PT1
-12V PT407
WW3
LPT22
SW403
COPPER2
J701
J702
FASTON
FASTON terminals
Measure plate mounting holes
WW1:5
WW1:4
Rear corner plate mounting holes
WW8:2
WW8:3
R131 47E
R132 47E
R133 22E
C159 100nF
J104:1
J104:2
J104:3
J124:1
J124:2
J124:3
Back Light
Screen
J114:1
J114:2
J114:3
J134:1
J134:2
J134:3
R701 8.25K
R702 2.74K
C701 1µF
IC701
ICM7555
CS555
R708 10.0K
C702 100nF
IC702:A
74HC74
IC704:A
IC704:B
7407
R705 332R
R704 332R
IC705
IC706
TLP521-1
R706 10.0K
R707 10.0K
+5REG
L6203
IC703:A
C705 10nF
C704 10nF
C703 100nF
R703 1.00R
WW701:1
WW701:2
C129 47µF
C516 4.7µF
R709 1.00K
LD701
LEDVCMS
Rouge
C645 10µF
C45 10µF
+5V_REG
PT701
IC707
IC708
78L05
IC123
IC124
7808
7908
C132 100nF
C130 47µF
C134 100nF
C133 100nF
C131 47µF
C135 100nF
Voltage References Legend
AGND
DGND
GND
GND_ANALYSIS
Dess.: F.SANQUER
Date : 08/01/99
Fichier : 0231053D.SCH
1 / 6
023.1053D
Carte Mère 4 Têtes
PCB Main 4 Heads
Supply (400) - Motorization (700)
DIAGNOSTICA STAGO

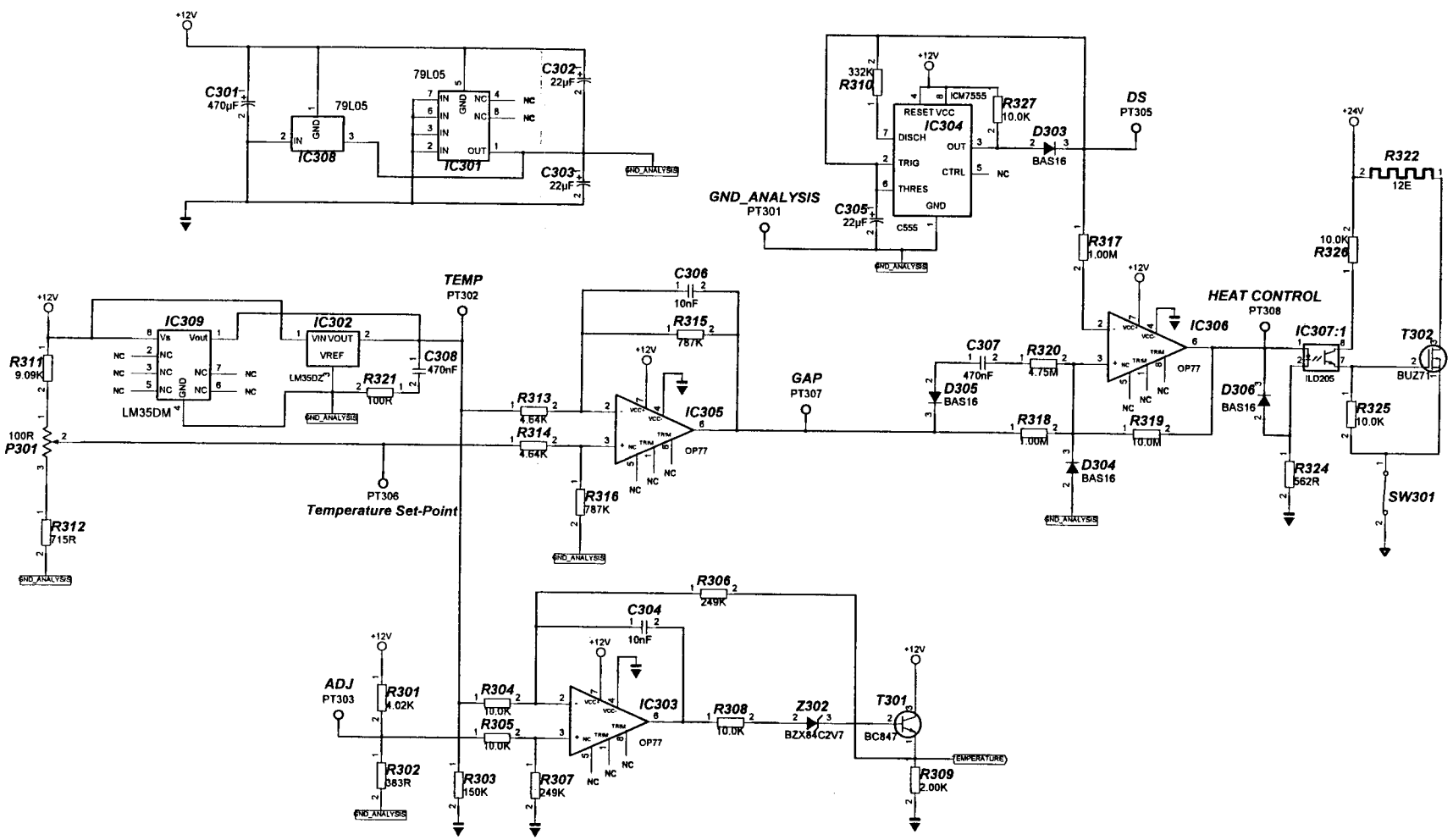

Voltage References Legend

	AGND
	DGND
	GND
GND_ANALYSIS	GND_ANALYSIS

Dess.: F.SANQUER	Date: 08/01/99	Fichier: 02310530.SCH	2 / 8	023.1053D

Carte Mère 4 Têtes
PCB Main 4 Heads
Heat Regulation (300)

DIAGNOSTICA STAGO

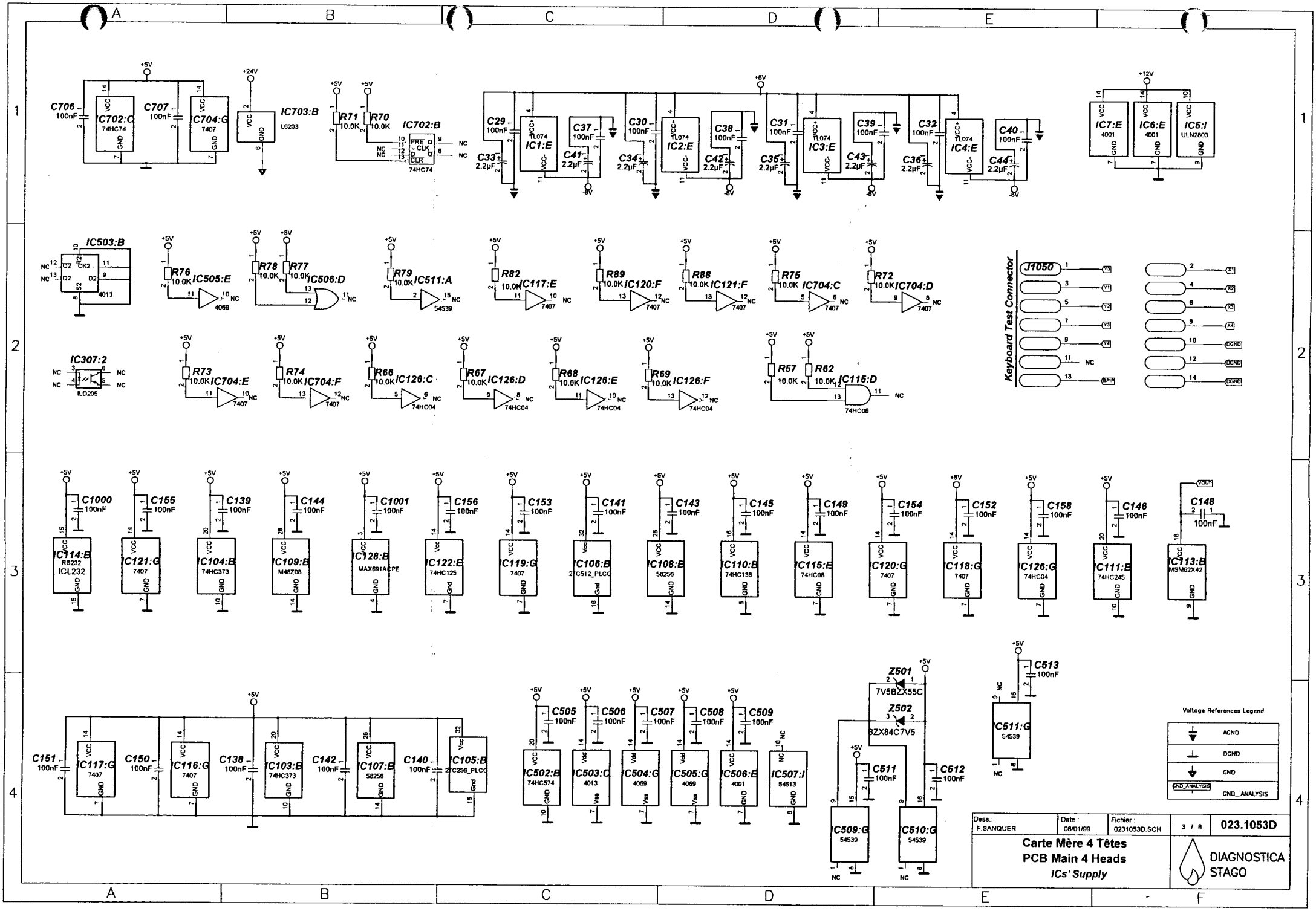
Keyboard Test Connector
J1050
Voltage References Legend
AGND
DGND
GND
GND_ANALYSIS
Carte Mère 4 Têtes
PCB Main 4 Heads
ICs' Supply
Dess.: F.SANQUER
Date : 08/01/99
Fichier : 0231053D.SCH
3 / 8
023.1053D
DIAGNOSTICA STAGO

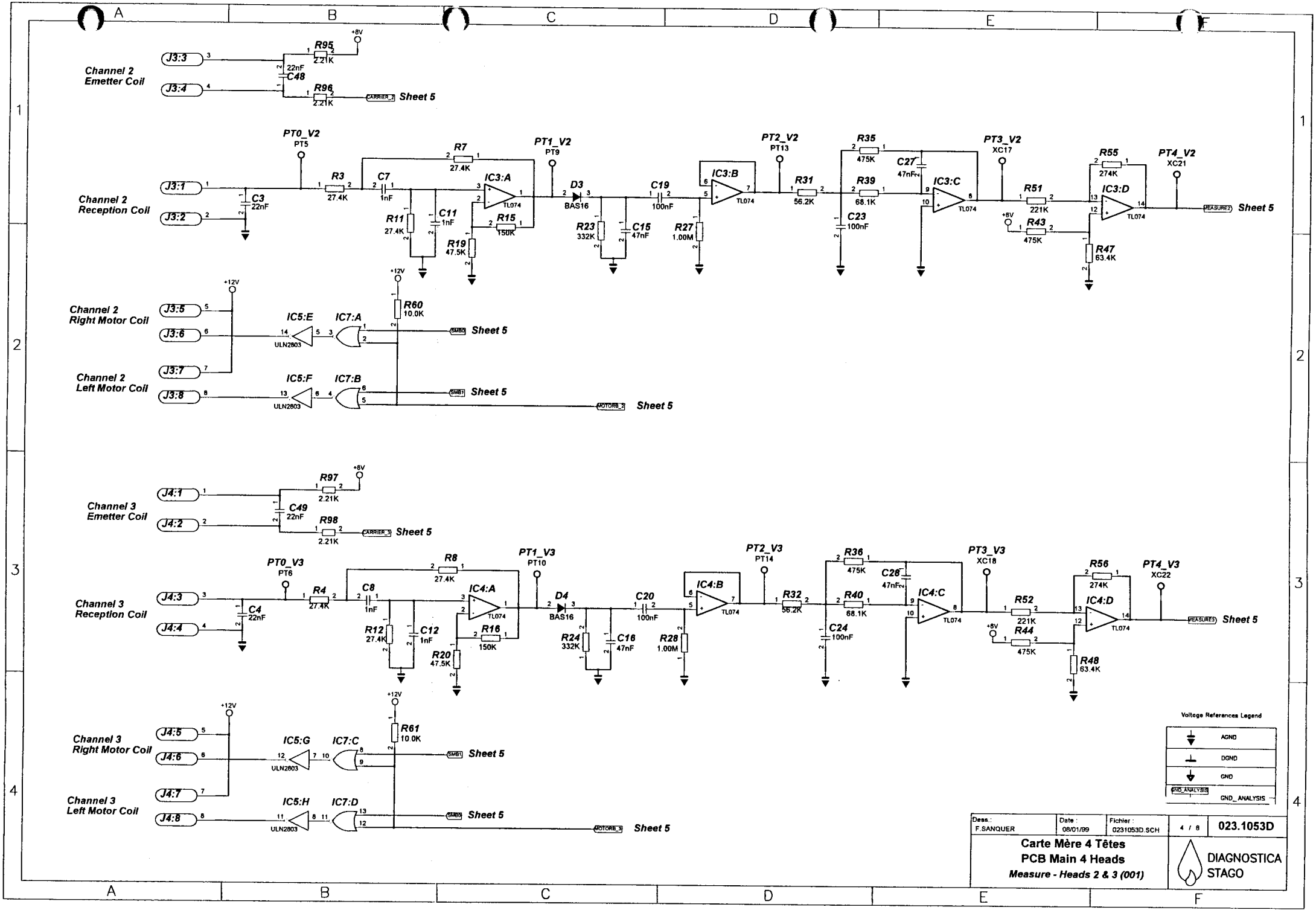
Channel 2 Emetter Coil
J3:3
J3:4
R95 2.21K
R96 2.21K
C48 22nF
+8V
CARRIER_2
Sheet 5
Channel 2 Reception Coil
J3:1
J3:2
C3 22nF
PT0_V2 PT5
R3 27.4K
C7 1nF
R7 27.4K
R11 27.4K
C11 1nF
IC3:A TL074
R15 150K
R19 47.5K
PT1_V2 PT9
D3 BAS16
R23 332K
C15 47nF
C19 100nF
IC3:B TL074
R27 1.00M
PT2_V2 PT13
R31 56.2K
R35 475K
R39 68.1K
C27 47nF
C23 100nF
IC3:C TL074
PT3_V2 XC17
R51 221K
R43 475K
R55 274K
IC3:D TL074
R47 63.4K
PT4_V2 XC21
MEASURE2
Channel 2 Right Motor Coil
J3:5
J3:6
+12V
IC5:E ULN2803
IC7:A
R60 10.0K
SMB0
Channel 2 Left Motor Coil
J3:7
J3:8
IC5:F ULN2803
IC7:B
SMB1
MOTORB_2
Channel 3 Emetter Coil
J4:1
J4:2
R97 2.21K
C49 22nF
R98 2.21K
CARRIER_3
Channel 3 Reception Coil
J4:3
J4:4
C4 22nF
PT0_V3 PT6
R4 27.4K
C8 1nF
R8 27.4K
R12 27.4K
C12 1nF
IC4:A TL074
R16 150K
R20 47.5K
PT1_V3 PT10
D4 BAS16
R24 332K
C16 47nF
C20 100nF
IC4:B TL074
R28 1.00M
PT2_V3 PT14
R32 56.2K
R36 475K
R40 68.1K
C28 47nF
C24 100nF
IC4:C TL074
PT3_V3 XC18
R52 221K
R44 475K
R56 274K
IC4:D TL074
R48 63.4K
PT4_V3 XC22
MEASURE3
Channel 3 Right Motor Coil
J4:5
J4:6
IC5:G ULN2803
IC7:C
R61 10.0K
SMB1
Channel 3 Left Motor Coil
J4:7
J4:8
IC5:H ULN2803
IC7:D
SMB0
MOTORB_3
Voltage References Legend
AGND
DGND
GND
GND_ANALYSIS
Dess.: F.SANQUER
Date : 08/01/99
Fichier : 0231053D.SCH
4 / 8
023.1053D
Carte Mère 4 Têtes
PCB Main 4 Heads
Measure - Heads 2 & 3 (001)
DIAGNOSTICA STAGO

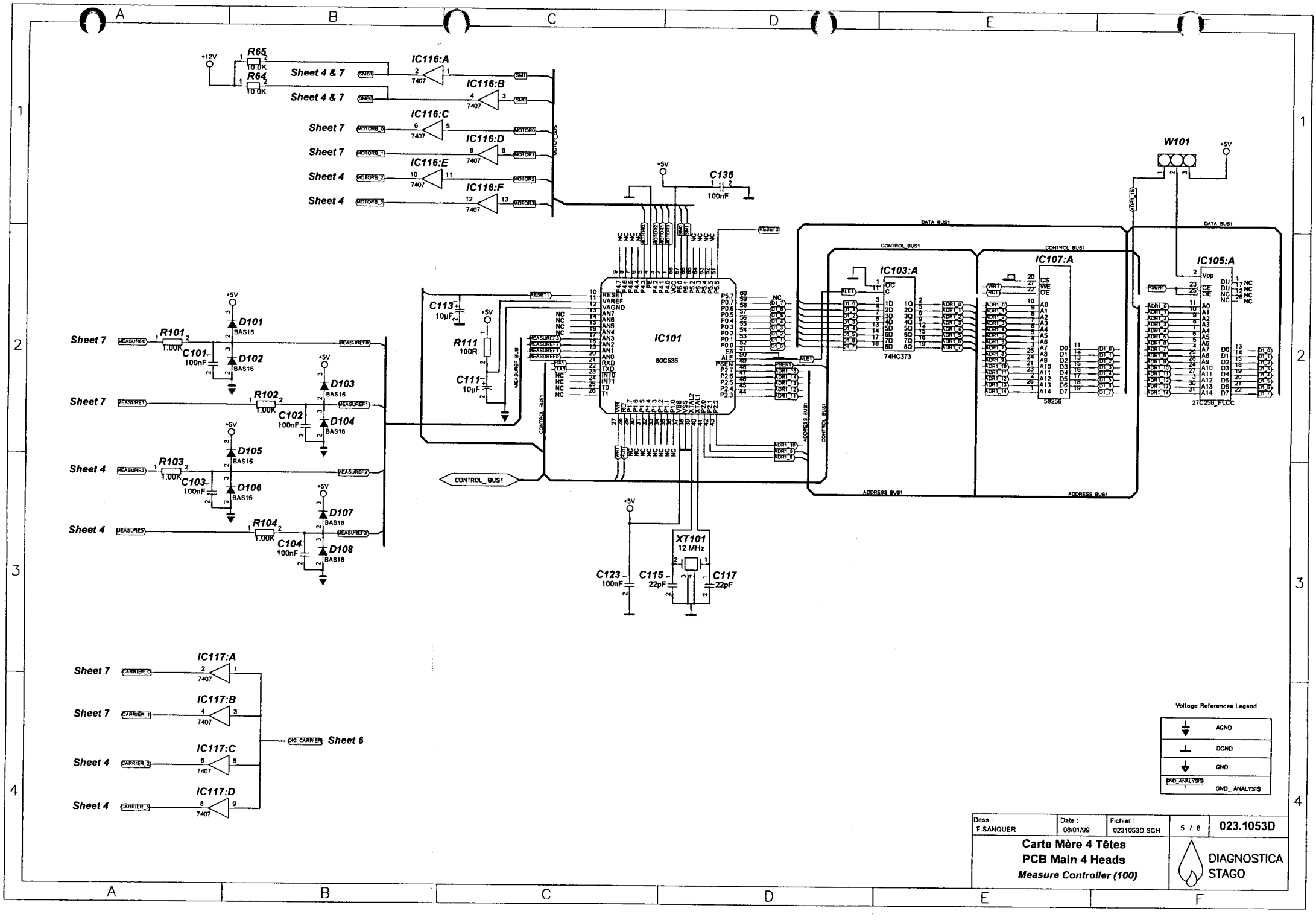
IC116:A
IC116:B
IC116:C
IC116:D
IC116:E
IC116:F
IC101
80C535
IC103:A
74HC373
IC107:A
58256
IC105:A
27C256_PLCC
W101
XT101
12 MHz
C136
100nF
C113
10µF
C111
10µF
R111
100R
C123
100nF
C115
22pF
C117
22pF
R65
10.0K
R64
10.0K
R101
1.00K
R102
1.00K
R103
1.00K
R104
1.00K
C101
100nF
C102
100nF
C103
100nF
C104
100nF
D101
D102
D103
D104
D105
D106
D107
D108
BAS16
IC117:A
IC117:B
IC117:C
IC117:D
7407
Sheet 4 & 7
Sheet 7
Sheet 4
Sheet 6
CONTROL_BUS1
DATA_BUS1
ADDRESS_BUS1
MOTORS_BUS
MEASUREF_BUS
Voltage References Legend
AGND
DGND
GND
GND_ANALYSIS
Dess.: F.SANQUER
Date : 08/01/99
Fichier : 0231053D.SCH
5 / 8
023.1053D
Carte Mère 4 Têtes
PCB Main 4 Heads
Measure Controller (100)
DIAGNOSTICA STAGO

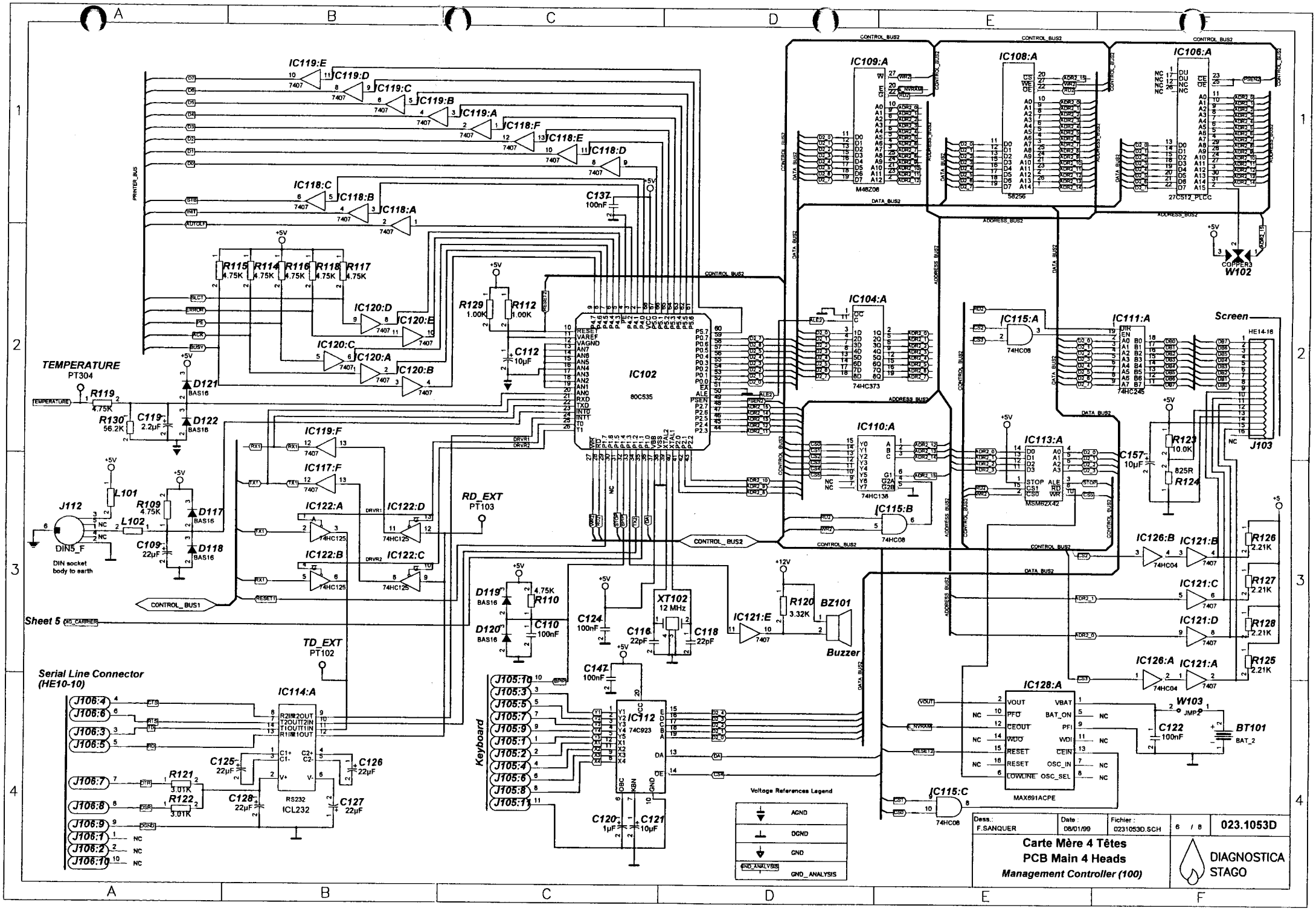
IC102
80C535
IC104:A
74HC373
IC108:A
58256
IC109:A
M48Z08
IC106:A
27C512_PLCC
IC110:A
74HC138
IC113:A
MSM62X42
IC111:A
74HC245
IC115:A
74HC08
IC115:B
74HC08
IC115:C
74HC08
IC128:A
MAX691ACPE
IC112
74C923
IC114:A
RS232
ICL232
IC122:A
IC122:B
IC122:C
IC122:D
74HC125
IC126:A
IC126:B
74HC04
IC121:A
IC121:B
IC121:C
IC121:D
IC121:E
7407
IC119:A
IC119:B
IC119:C
IC119:D
IC119:E
IC119:F
IC117:F
IC118:A
IC118:B
IC118:C
IC118:D
IC118:E
IC118:F
IC120:A
IC120:B
IC120:C
IC120:D
IC120:E
TEMPERATURE
PT304
RD_EXT
PT103
TD_EXT
PT102
Serial Line Connector
(HE10-10)
Keyboard
Buzzer
BZ101
XT102
12 MHz
Screen
HE14-16
J103
J112
DIN5_F
DIN socket
body to earth
W102
COPPER3
W103
JMP2
BT101
BAT_2
Voltage References Legend
AGND
DGND
GND
GND_ANALYSIS
Sheet 5
Dess.: F.SANQUER
Date : 08/01/99
Fichier : 0231053D.SCH
6 / 8
023.1053D
Carte Mère 4 Têtes
PCB Main 4 Heads
Management Controller (100)
DIAGNOSTICA
STAGO

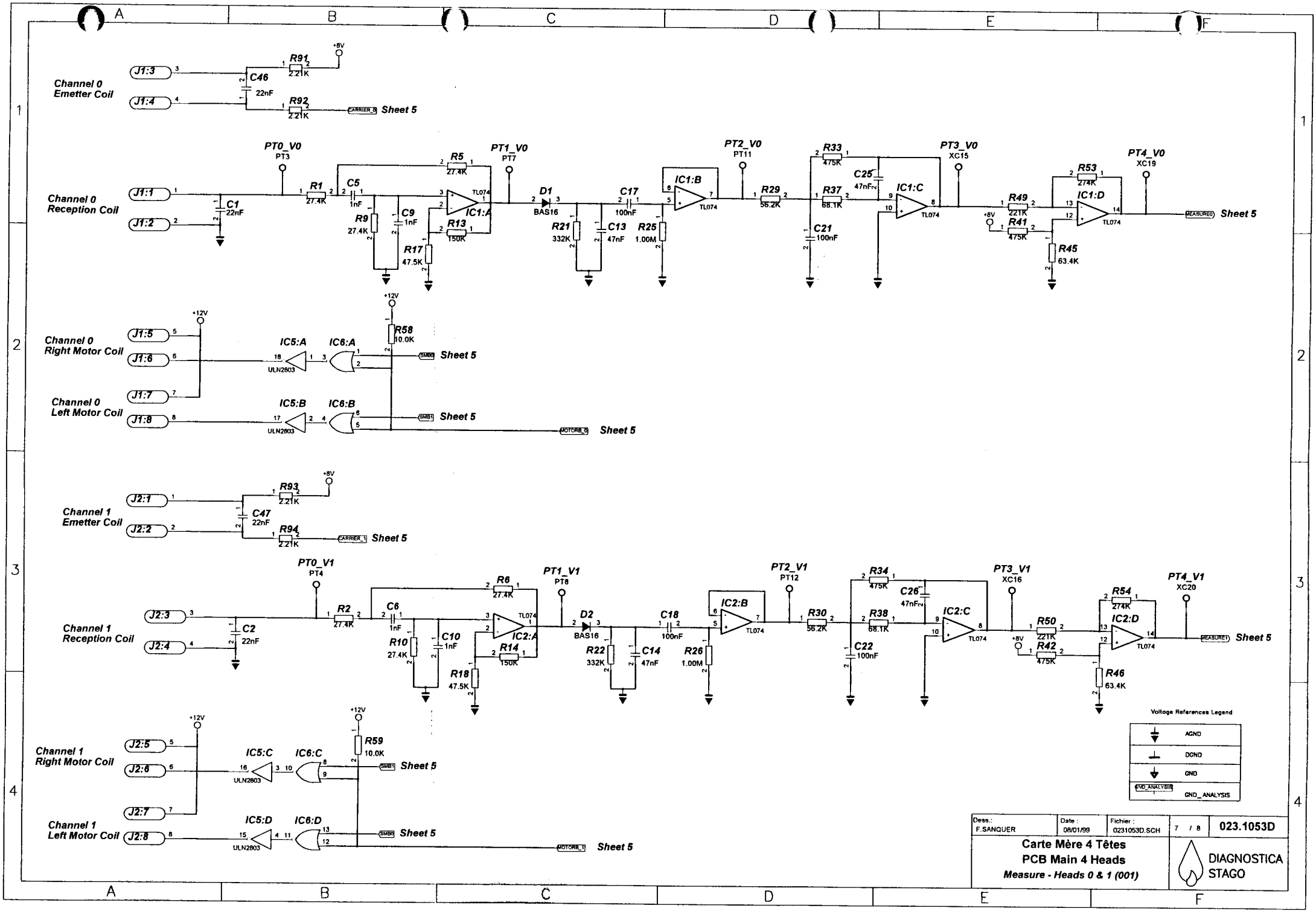
Channel 0 Emetter Coil
J1:3
J1:4
C46 22nF
R91 2.21K
R92 2.21K
+8V
CARRIER_0
Sheet 5
Channel 0 Reception Coil
J1:1
J1:2
C1 22nF
PT0_V0 PT3
R1 27.4K
C5 1nF
R9 27.4K
C9 1nF
R17 47.5K
R5 27.4K
R13 150K
IC1:A
TL074
PT1_V0 PT7
D1 BAS16
R21 332K
C17 100nF
C13 47nF
R25 1.00M
IC1:B
PT2_V0 PT11
R29 56.2K
R33 475K
R37 68.1K
C21 100nF
C25 47nF
IC1:C
PT3_V0 XC15
R49 221K
R41 475K
R53 274K
R45 63.4K
IC1:D
PT4_V0 XC19
MEASURE0
Channel 0 Right Motor Coil
J1:5
J1:6
J1:7
+12V
R58 10.0K
IC5:A
IC6:A
ULN2803
SMB0
Channel 0 Left Motor Coil
J1:8
IC5:B
IC6:B
SMB1
MOTORB_0
Channel 1 Emetter Coil
J2:1
J2:2
C47 22nF
R93 2.21K
R94 2.21K
CARRIER_1
Channel 1 Reception Coil
J2:3
J2:4
C2 22nF
PT0_V1 PT4
R2 27.4K
C6 1nF
R10 27.4K
C10 1nF
R18 47.5K
R6 27.4K
R14 150K
IC2:A
PT1_V1 PT8
D2 BAS16
R22 332K
C18 100nF
C14 47nF
R26 1.00M
IC2:B
PT2_V1 PT12
R30 56.2K
R34 475K
R38 68.1K
C22 100nF
C26 47nF
IC2:C
PT3_V1 XC16
R50 221K
R42 475K
R54 274K
R46 63.4K
IC2:D
PT4_V1 XC20
MEASURE1
Channel 1 Right Motor Coil
J2:5
J2:6
J2:7
R59 10.0K
IC5:C
IC6:C
SMB1
Channel 1 Left Motor Coil
J2:8
IC5:D
IC6:D
SMB0
MOTORB_1
Voltage References Legend
AGND
DGND
GND
GND_ANALYSIS
Dess.: F.SANQUER
Date : 08/01/99
Fichier : 0231053D.SCH
7 / 8
023.1053D
Carte Mère 4 Têtes
PCB Main 4 Heads
Measure - Heads 0 & 1 (001)
DIAGNOSTICA STAGO

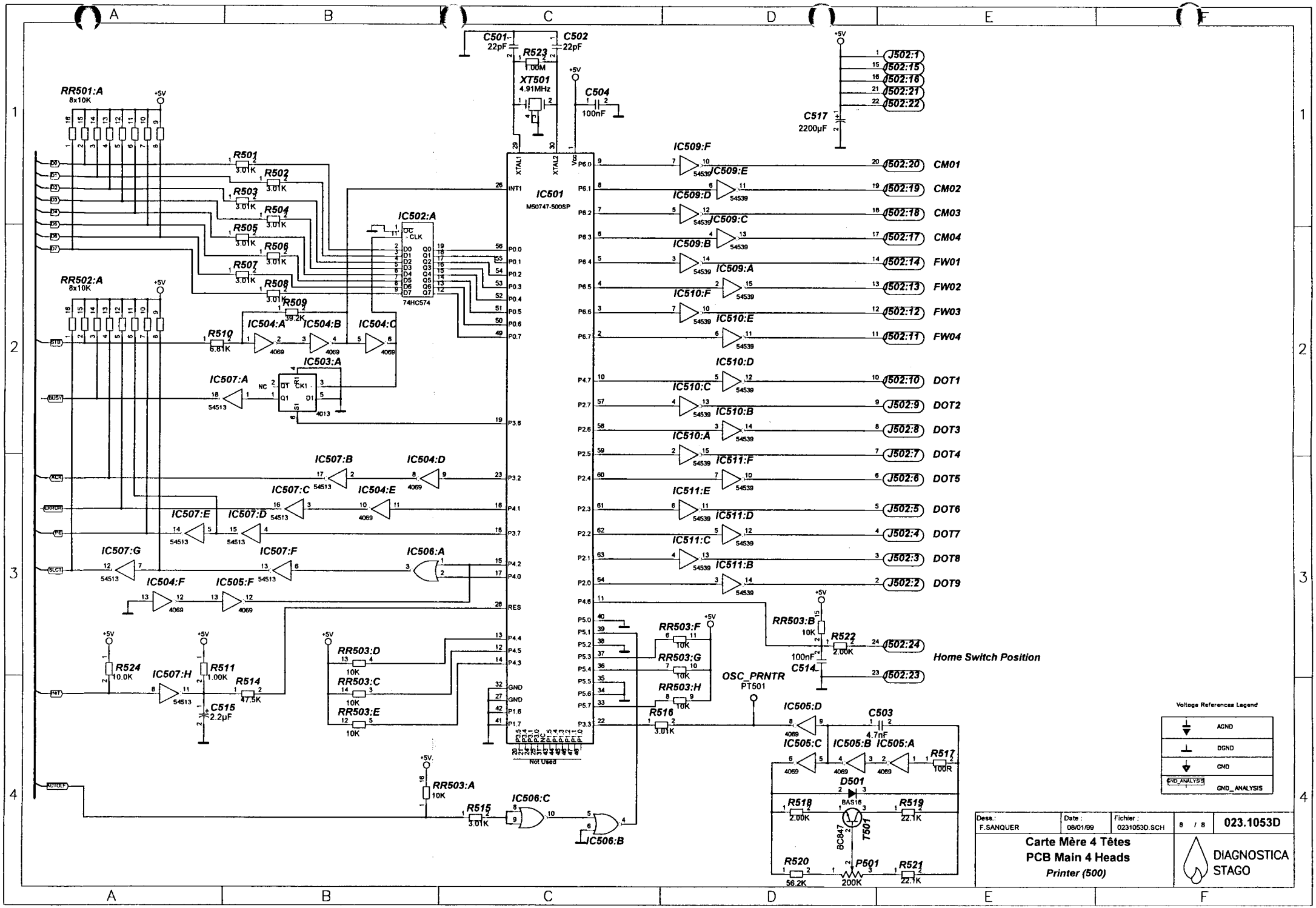
C501 22pF
C502 22pF
R523 1.00M
XT501 4.91MHz
C504 100nF
C517 2200µF
IC501 M50747-500SP
IC502:A 74HC574
RR501:A 8x10K
RR502:A 8x10K
R501 3.01K
R502 3.01K
R503 3.01K
R504 3.01K
R505 3.01K
R506 3.01K
R507 3.01K
R508 3.01K
R509 39.2K
R510 6.81K
IC504:A
IC504:B
IC504:C
IC503:A
IC507:A
IC507:B
IC504:D
IC507:C
IC504:E
IC507:E
IC507:D
IC507:G
IC507:F
IC506:A
IC504:F
IC505:F
IC507:H
R524 10.0K
R511 1.00K
R514 47.5K
C515 2.2µF
RR503:D 10K
RR503:C 10K
RR503:E 10K
RR503:A 10K
R515 3.01K
IC506:C
IC506:B
Not Used
IC509:F
IC509:E
IC509:D
IC509:C
IC509:B
IC509:A
IC510:F
IC510:E
IC510:D
IC510:C
IC510:B
IC510:A
IC511:F
IC511:E
IC511:D
IC511:C
IC511:B
J502:1
J502:15
J502:16
J502:21
J502:22
J502:20 CM01
J502:19 CM02
J502:18 CM03
J502:17 CM04
J502:14 FW01
J502:13 FW02
J502:12 FW03
J502:11 FW04
J502:10 DOT1
J502:9 DOT2
J502:8 DOT3
J502:7 DOT4
J502:6 DOT5
J502:5 DOT6
J502:4 DOT7
J502:3 DOT8
J502:2 DOT9
RR503:B 10K
R522 2.00K
C514 100nF
J502:24
J502:23
Home Switch Position
RR503:F 10K
RR503:G 10K
RR503:H 10K
R516 3.01K
OSC_PRNTR PT501
IC505:D
C503 4.7nF
IC505:C
IC505:B
IC505:A
R517 100R
D501 BAS16
R518 2.00K
R519 22.1K
T501 BC847
R520 56.2K
P501 200K
R521 22.1K
Voltage References Legend
AGND
DGND
GND
GND_ANALYSIS
Dess.: F.SANQUER
Date : 08/01/99
Fichier : 0231053D.SCH
8 / 8
023.1053D
Carte Mère 4 Têtes
PCB Main 4 Heads
Printer (500)
DIAGNOSTICA STAGO

8.1.2. Electronic Schematic for 8 Channel Version

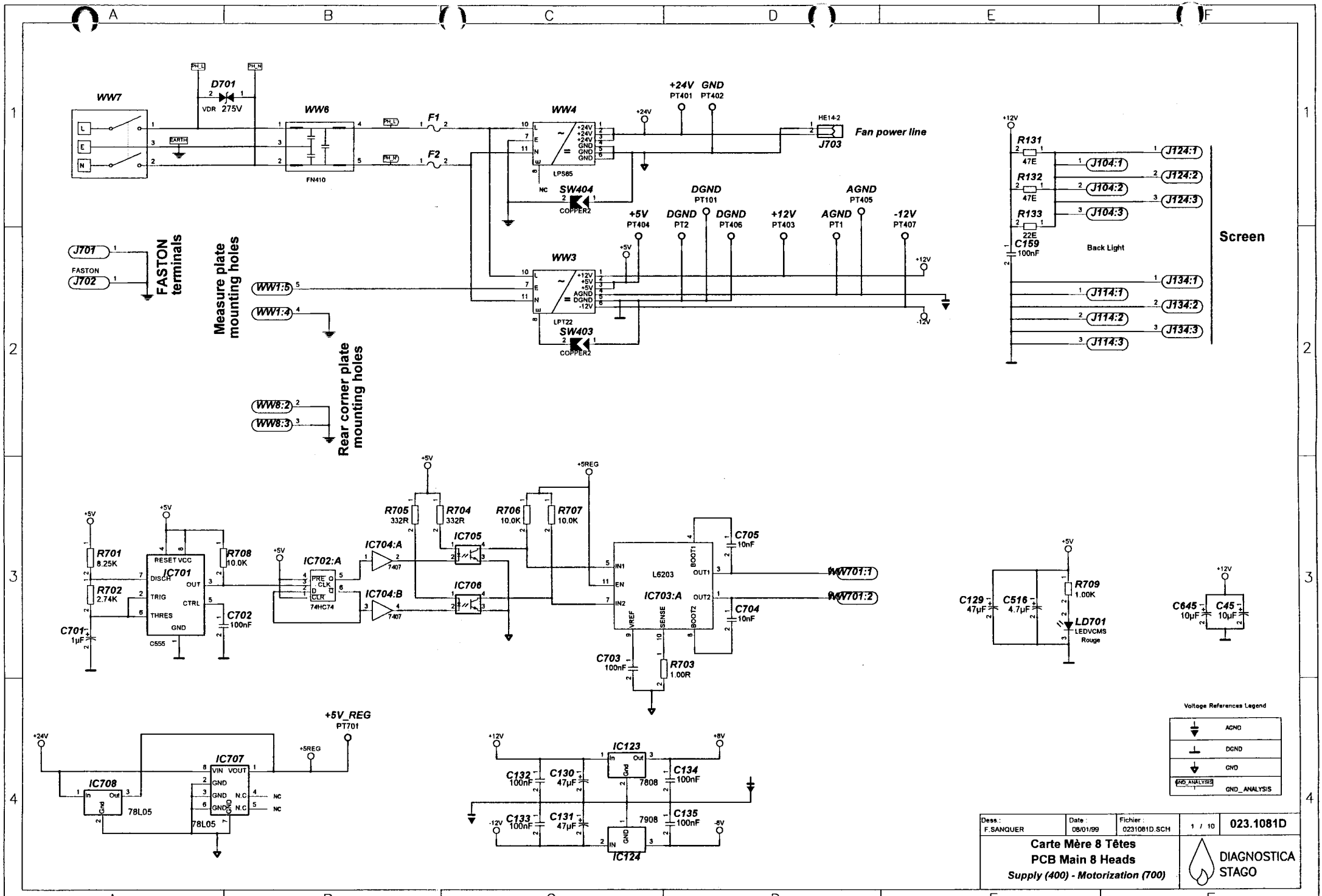
WW7
D701
VDR 275V
WW6
FN410
F1
F2
WW4
LPS65
SW404
COPPER2
+24V PT401
GND PT402
HE14-2
J703
Fan power line
DGND PT101
AGND PT405
+5V PT404
DGND PT2
DGND PT406
+12V PT403
AGND PT1
-12V PT407
WW3
LPT22
SW403
COPPER2
J701
J702
FASTON
FASTON terminals
Measure plate mounting holes
WW1:5
WW1:4
Rear corner plate mounting holes
WW8:2
WW8:3
R131 47E
R132 47E
R133 22E
C159 100nF
Back Light
J104:1
J104:2
J104:3
J124:1
J124:2
J124:3
J134:1
J134:2
J134:3
J114:1
J114:2
J114:3
Screen
R701 8.25K
R702 2.74K
C701 1µF
IC701
C555
R708 10.0K
C702 100nF
IC702:A
74HC74
IC704:A
IC704:B
7407
R705 332R
R704 332R
IC705
IC706
R706 10.0K
R707 10.0K
L6203
IC703:A
C705 10nF
C704 10nF
C703 100nF
R703 1.00R
WW701:1
WW701:2
C129 47µF
C516 4.7µF
R709 1.00K
LD701 LEDVCMS Rouge
C645 10µF
C45 10µF
+5V_REG PT701
IC707
IC708
78L05
IC123
IC124
7808
7908
C132 100nF
C130 47µF
C134 100nF
C133 100nF
C131 47µF
C135 100nF
Voltage References Legend
AGND
DGND
GND
GND_ANALYSIS
Dess.: F.SANQUER
Date: 08/01/99
Fichier: 0231081D.SCH
1 / 10
023.1081D
Carte Mère 8 Têtes
PCB Main 8 Heads
Supply (400) - Motorization (700)
DIAGNOSTICA STAGO

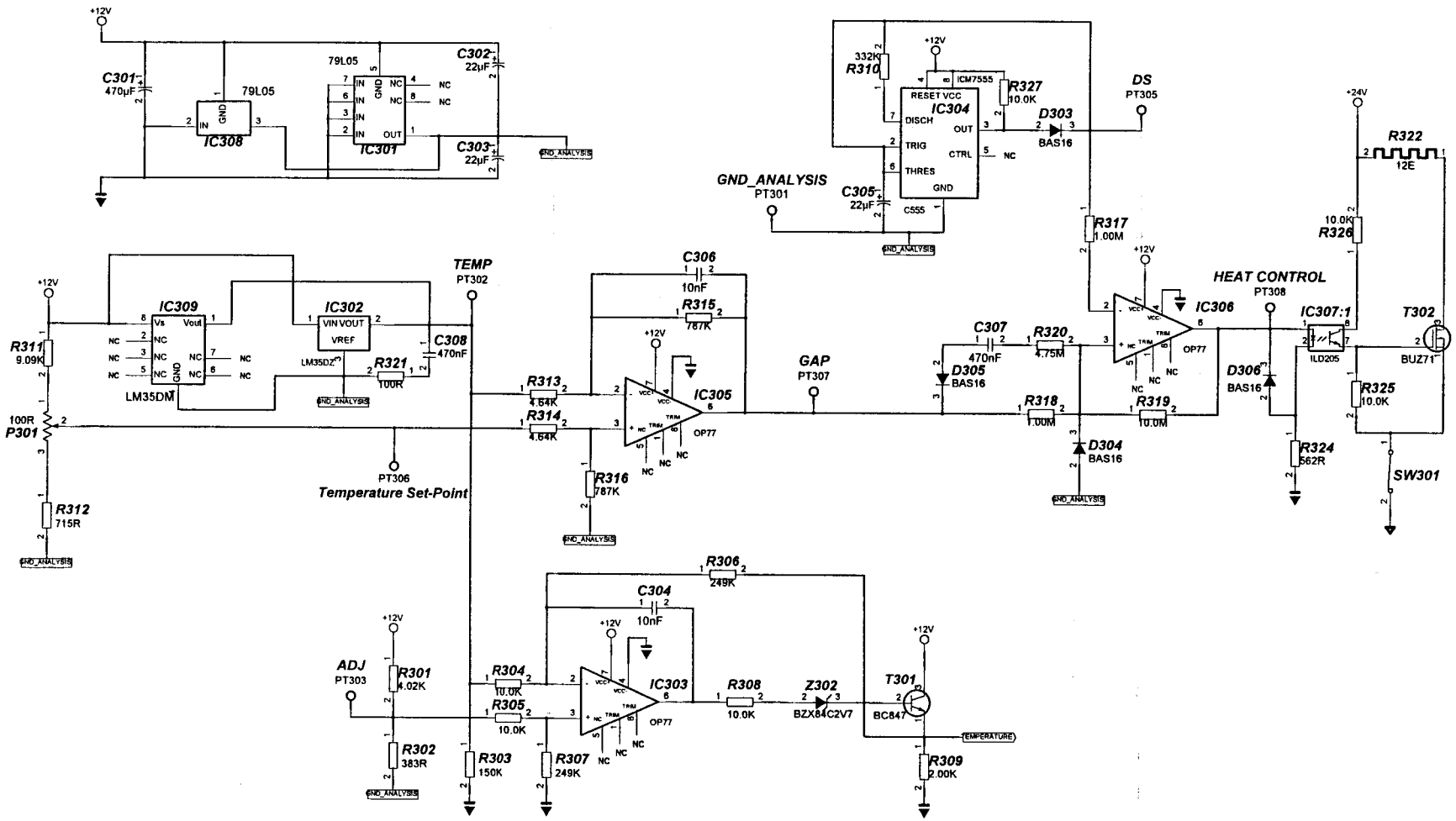

Voltage References Legend

	AGND
	DGND
	GND
GND_ANALYSIS	GND_ANALYSIS

Dess.:	Date :	Fichier :		
F.SANQUER	08/01/99	0231081D.SCH	2 / 10	023.1081D

Carte Mère 8 Têtes
PCB Main 8 Heads
Heat Regulation (300)

DIAGNOSTICA STAGO

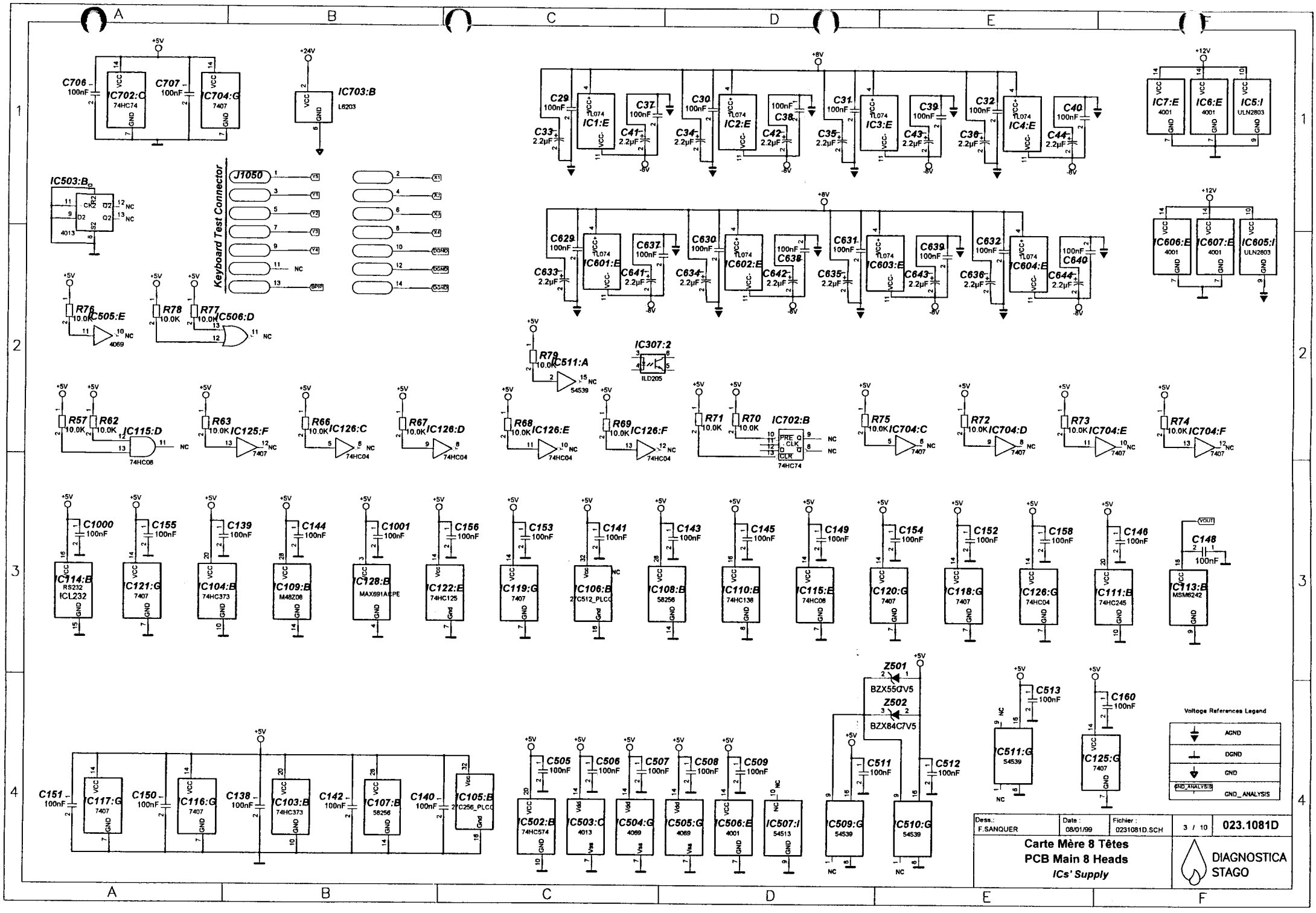
Keyboard Test Connector
J1050
Voltage References Legend
AGND
DGND
GND
GND_ANALYSIS
Z501
BZX55C7V5
Z502
BZX84C7V5
Dess.: F.SANQUER
Date : 08/01/99
Fichier : 0231081D.SCH
3 / 10
023.1081D
Carte Mère 8 Têtes
PCB Main 8 Heads
ICs' Supply
DIAGNOSTICA STAGO

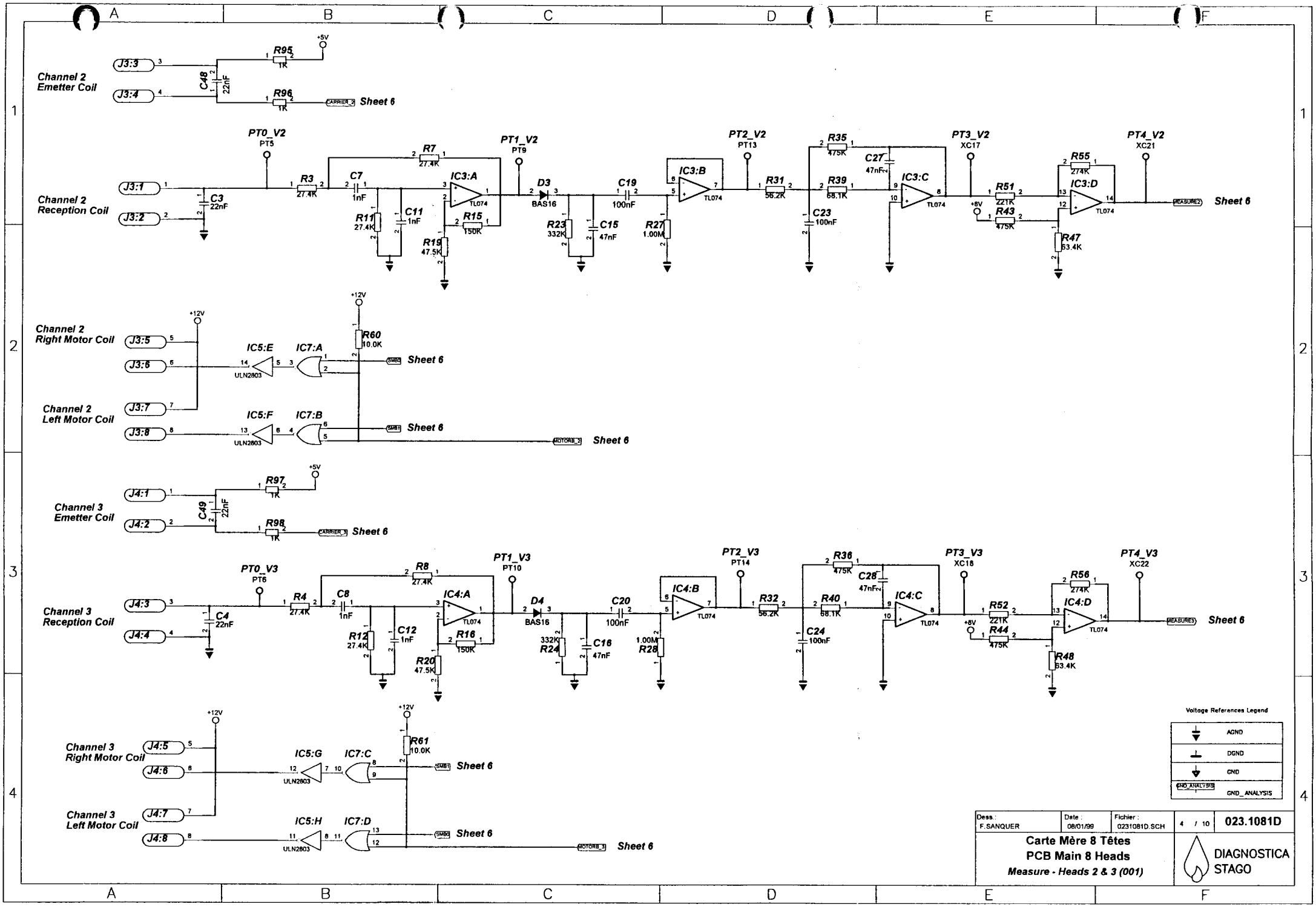
Channel 2 Emetter Coil
J3:3
J3:4
C48 22nF
R95 1K
R96 1K
+5V
CARRIER_2
Sheet 6
Channel 2 Reception Coil
J3:1
J3:2
C3 22nF
PT0_V2 PT5
R3 27.4K
R7 27.4K
C7 1nF
R11 27.4K
C11 1nF
IC3:A TL074
R15 150K
R19 47.5K
PT1_V2 PT9
D3 BAS16
R23 332K
C15 47nF
C19 100nF
IC3:B TL074
R27 1.00M
PT2_V2 PT13
R31 56.2K
R35 475K
R39 68.1K
C27 47nF
C23 100nF
IC3:C TL074
PT3_V2 XC17
+8V
R51 221K
R43 475K
R55 274K
IC3:D TL074
R47 63.4K
PT4_V2 XC21
MEASURE2
Sheet 6
Channel 2 Right Motor Coil
J3:5
J3:6
+12V
IC5:E ULN2803
IC7:A
R60 10.0K
SMB0
Sheet 6
Channel 2 Left Motor Coil
J3:7
J3:8
IC5:F ULN2803
IC7:B
SMB1
MOTORB_2
Sheet 6
Channel 3 Emetter Coil
J4:1
J4:2
C49 22nF
R97 1K
R98 1K
+5V
CARRIER_3
Sheet 6
Channel 3 Reception Coil
J4:3
J4:4
C4 22nF
PT0_V3 PT6
R4 27.4K
R8 27.4K
C8 1nF
R12 27.4K
C12 1nF
IC4:A TL074
R16 150K
R20 47.5K
PT1_V3 PT10
D4 BAS16
R24 332K
C16 47nF
C20 100nF
IC4:B TL074
R28 1.00M
PT2_V3 PT14
R32 56.2K
R36 475K
R40 68.1K
C28 47nF
C24 100nF
IC4:C TL074
PT3_V3 XC18
+8V
R52 221K
R44 475K
R56 274K
IC4:D TL074
R48 63.4K
PT4_V3 XC22
MEASURE3
Sheet 6
Channel 3 Right Motor Coil
J4:5
J4:6
+12V
IC5:G ULN2803
IC7:C
R61 10.0K
SMB1
Sheet 6
Channel 3 Left Motor Coil
J4:7
J4:8
IC5:H ULN2803
IC7:D
SMB0
MOTORB_3
Sheet 6
Voltage References Legend
AGND
DGND
GND
GND_ANALYSIS
Dess.: F.SANQUER
Date : 08/01/99
Fichier : 0231081D.SCH
4 / 10
023.1081D
Carte Mère 8 Têtes
PCB Main 8 Heads
Measure - Heads 2 & 3 (001)
DIAGNOSTICA STAGO

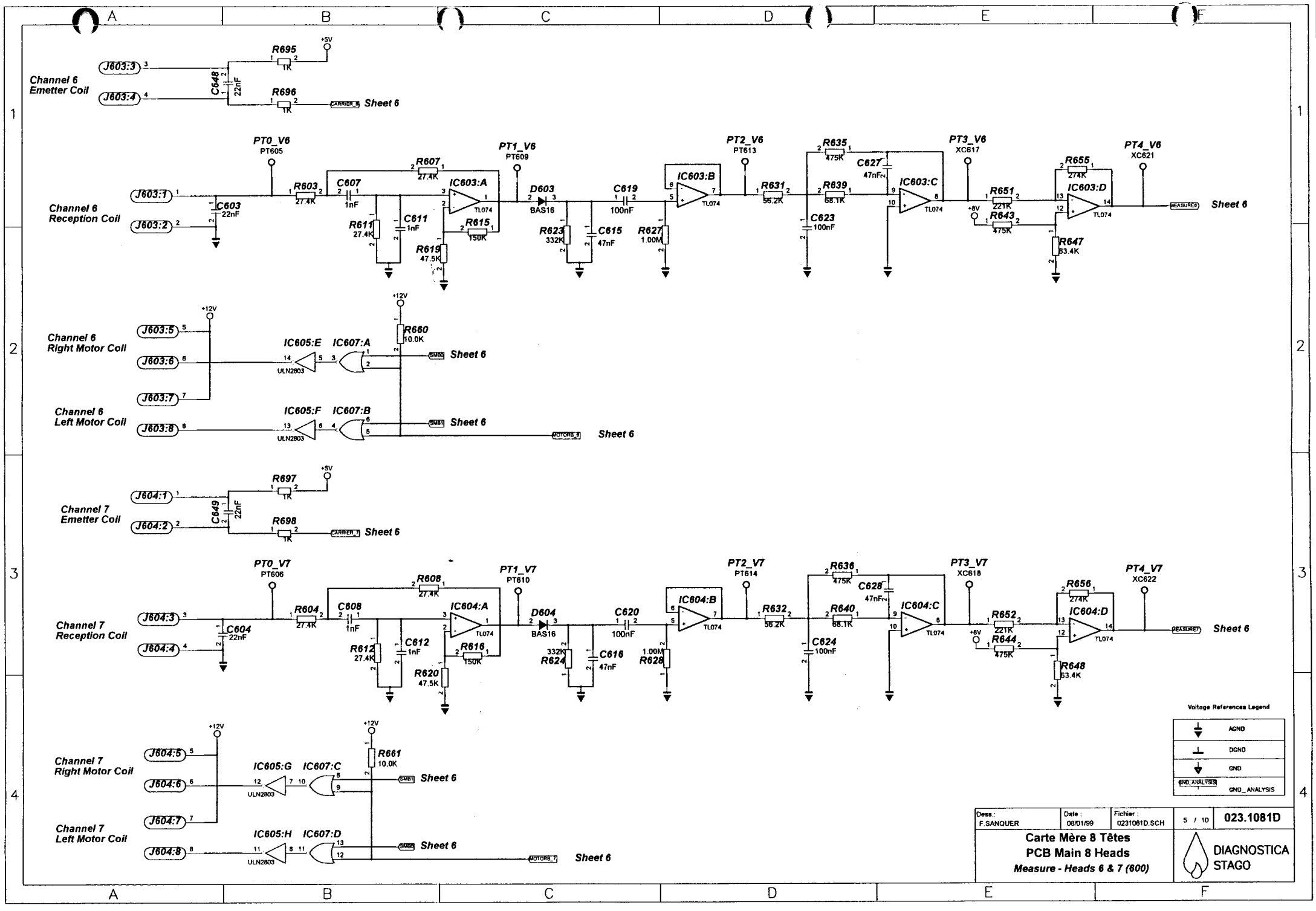
Channel 6 Emetter Coil
J603:3
J603:4
C648 22nF
R695 1K
R696 1K
+5V
CARRIER_6
Sheet 6
Channel 6 Reception Coil
J603:1
J603:2
C603 22nF
PT0_V6 PT605
R603 27.4K
C607 1nF
R607 27.4K
R611 27.4K
C611 1nF
IC603:A TL074
R615 150K
R619 47.5K
PT1_V6 PT609
D603 BAS16
C619 100nF
R623 332K
C615 47nF
R627 1.00M
IC603:B TL074
PT2_V6 PT613
R631 56.2K
R635 475K
R639 68.1K
C627 47nF
C623 100nF
IC603:C TL074
PT3_V6 XC617
R651 221K
R643 475K
+8V
R655 274K
IC603:D TL074
R647 53.4K
PT4_V6 XC621
MEASURE6
Channel 6 Right Motor Coil
J603:5
J603:6
J603:7
+12V
IC605:E ULN2803
IC607:A
R660 10.0K
SMB0
Channel 6 Left Motor Coil
J603:8
IC605:F ULN2803
IC607:B
SMB1
MOTORS_6
Channel 7 Emetter Coil
J604:1
J604:2
C649 22nF
R697 1K
R698 1K
CARRIER_7
Channel 7 Reception Coil
J604:3
J604:4
C604 22nF
PT0_V7 PT606
R604 27.4K
C608 1nF
R608 27.4K
R612 27.4K
C612 1nF
IC604:A TL074
R616 150K
R620 47.5K
PT1_V7 PT610
D604 BAS16
C620 100nF
R624 332K
C616 47nF
R628 1.00M
IC604:B TL074
PT2_V7 PT614
R632 56.2K
R636 475K
R640 68.1K
C628 47nF
C624 100nF
IC604:C TL074
PT3_V7 XC618
R652 221K
R644 475K
R656 274K
IC604:D TL074
R648 53.4K
PT4_V7 XC622
MEASURE7
Channel 7 Right Motor Coil
J604:5
J604:6
J604:7
IC605:G ULN2803
IC607:C
R661 10.0K
SMB1
Channel 7 Left Motor Coil
J604:8
IC605:H ULN2803
IC607:D
SMB8
MOTORS_7
Voltage References Legend
AGND
DGND
GND
GND_ANALYSIS
Dess.: F.SANQUER
Date : 08/01/99
Fichier : 0231081D.SCH
5 / 10
023.1081D
Carte Mère 8 Têtes
PCB Main 8 Heads
Measure - Heads 6 & 7 (600)
DIAGNOSTICA STAGO

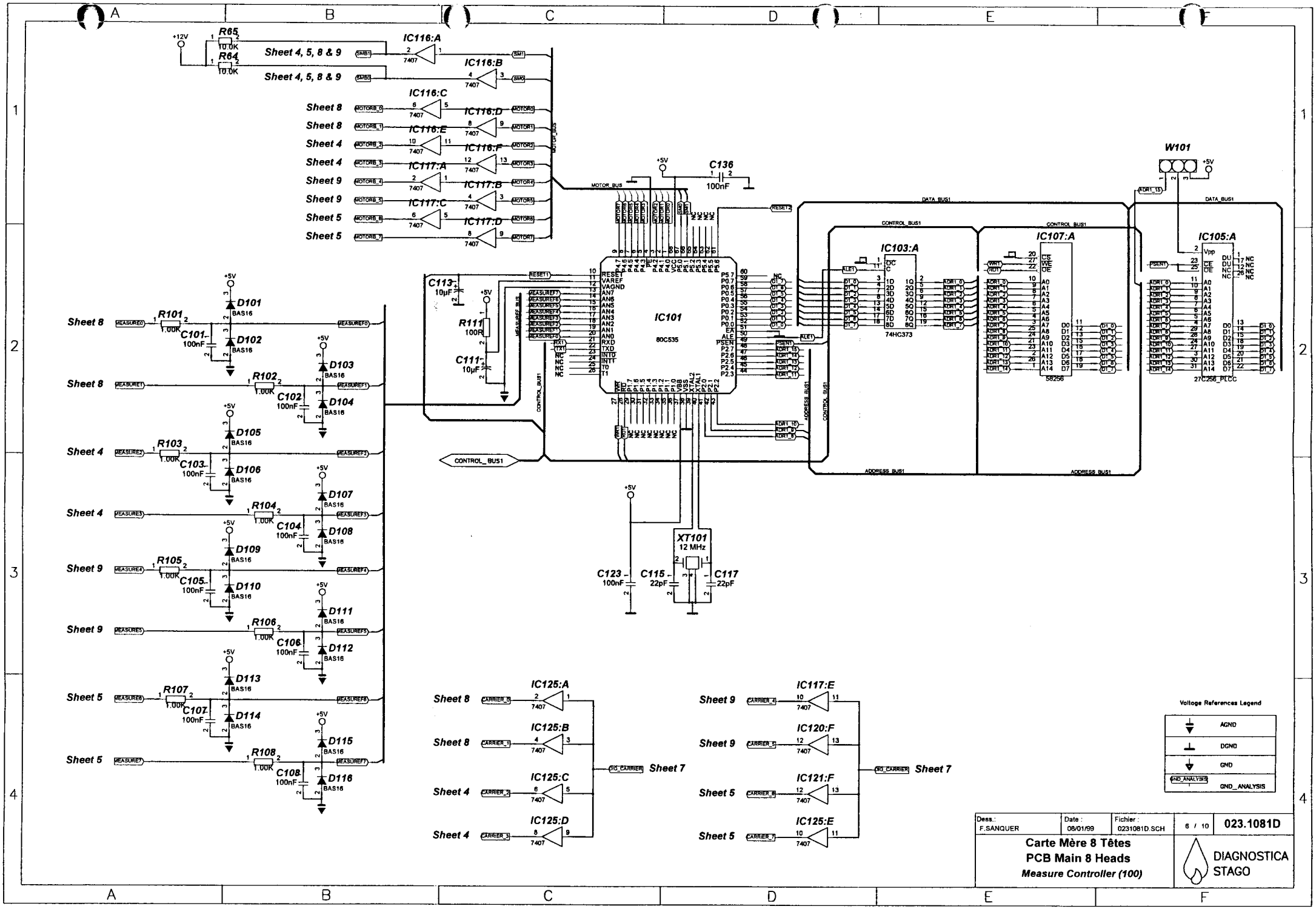
IC116:A
IC116:B
IC116:C
IC116:D
IC116:E
IC116:F
IC117:A
IC117:B
IC117:C
IC117:D
IC101
80C535
IC103:A
74HC373
IC107:A
58256
IC105:A
27C256_PLCC
W101
XT101
12 MHz
C136
100nF
C113
10µF
C111
10µF
R111
100R
C123
100nF
C115
22pF
C117
22pF
IC125:A
IC125:B
IC125:C
IC125:D
IC117:E
IC120:F
IC121:F
IC125:E
NO_CARRIER
Sheet 7
Voltage References Legend
AGND
DGND
GND
GND_ANALYSIS
Dess.: F.SANQUER
Date : 06/01/99
Fichier : 0231081D.SCH
6 / 10
023.1081D
Carte Mère 8 Têtes
PCB Main 8 Heads
Measure Controller (100)
DIAGNOSTICA STAGO

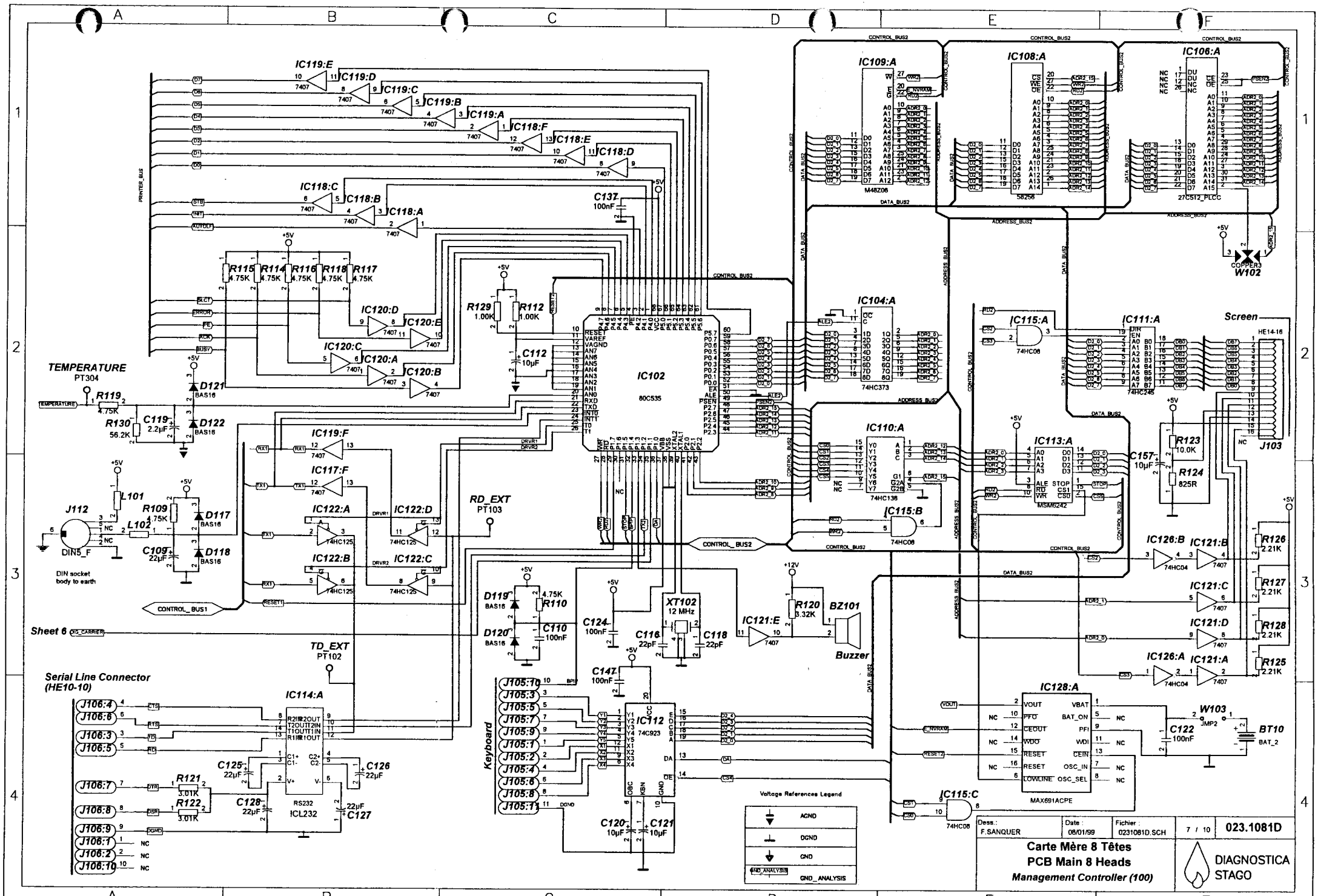
IC102
80C535
IC109:A
M48Z06
IC108:A
58256
IC106:A
27C512_PLCC
IC104:A
74HC373
IC110:A
74HC138
IC113:A
MSM6242
IC111:A
74HC245
IC115:A
74HC08
IC115:B
74HC08
IC115:C
74HC08
IC128:A
MAX691ACPE
IC112
74C923
IC114:A
RS232
ICL232
TEMPERATURE
PT304
RD_EXT
PT103
TD_EXT
PT102
Screen
HE14-16
J103
J112
DIN5_F
DIN socket
body to earth
Serial Line Connector
(HE10-10)
Keyboard
Buzzer
BZ101
XT102
12 MHz
BT10
BAT_2
W102
W103
Voltage References Legend
AGND
DGND
GND
GND_ANALYSIS
Sheet 6
CONTROL_BUS2
CONTROL_BUS1
DATA_BUS2
ADDRESS_BUS2
PRINTER_BUS
Dess.: F.SANQUER
Date : 06/01/99
Fichier : 0231081D.SCH
7 / 10
023.1081D
Carte Mère 8 Têtes
PCB Main 8 Heads
Management Controller (100)
DIAGNOSTICA
STAGO

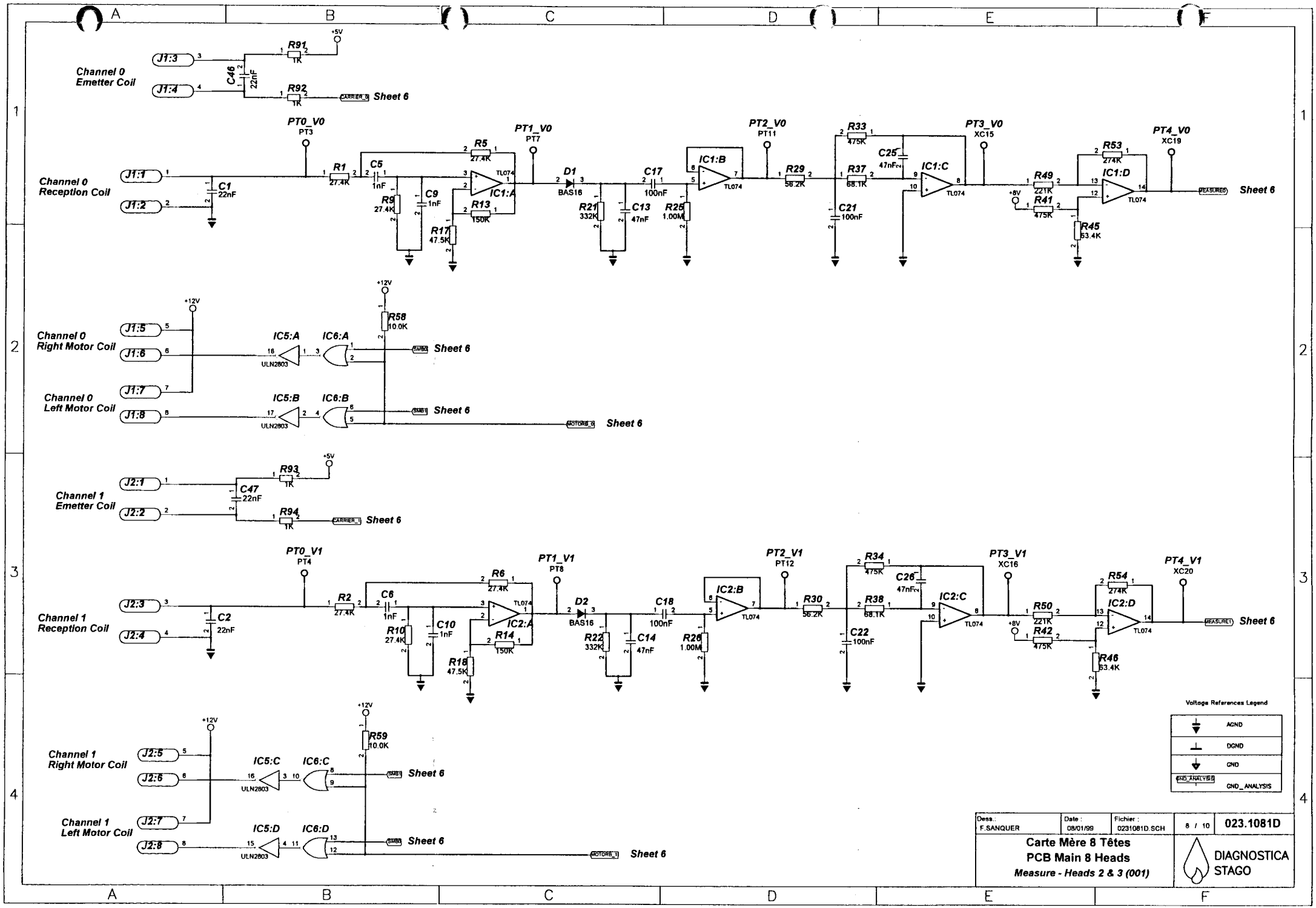
Channel 0 Emetter Coil
J1:3
J1:4
C46 22nF
R91 1K
R92 1K
+5V
CARRIER_0
Sheet 6
Channel 0 Reception Coil
J1:1
J1:2
C1 22nF
PT0_V0 PT3
R1 27.4K
C5 1nF
R9 27.4K
C9 1nF
R5 27.4K
R13 150K
R17 47.5K
IC1:A TL074
PT1_V0 PT7
D1 BAS16
R21 332K
C13 47nF
C17 100nF
R25 1.00M
IC1:B TL074
PT2_V0 PT11
R29 56.2K
R33 475K
R37 68.1K
C25 47nF
C21 100nF
IC1:C TL074
PT3_V0 XC15
R49 221K
R41 475K
+8V
R53 274K
R45 63.4K
IC1:D TL074
PT4_V0 XC19
MEASURE0
Channel 0 Right Motor Coil
J1:5
J1:6
J1:7
+12V
R58 10.0K
IC5:A ULN2803
IC6:A
SMB0
Channel 0 Left Motor Coil
J1:8
IC5:B ULN2803
IC6:B
MOTORB_0
Channel 1 Emetter Coil
J2:1
J2:2
C47 22nF
R93 1K
R94 1K
CARRIER_1
Channel 1 Reception Coil
J2:3
J2:4
C2 22nF
PT0_V1 PT4
R2 27.4K
C6 1nF
R10 27.4K
C10 1nF
R6 27.4K
R14 150K
R18 47.5K
IC2:A TL074
PT1_V1 PT8
D2 BAS16
R22 332K
C14 47nF
C18 100nF
R26 1.00M
IC2:B TL074
PT2_V1 PT12
R30 56.2K
R34 475K
R38 68.1K
C26 47nF
C22 100nF
IC2:C TL074
PT3_V1 XC16
R50 221K
R42 475K
+8V
R54 274K
R46 63.4K
IC2:D TL074
PT4_V1 XC20
MEASURE1
Channel 1 Right Motor Coil
J2:5
J2:6
R59 10.0K
IC5:C ULN2803
IC6:C
SMB1
Channel 1 Left Motor Coil
J2:7
J2:8
IC5:D ULN2803
IC6:D
MOTORB_1
Voltage References Legend
AGND
DGND
GND
GND_ANALYSIS
Dess.: F.SANQUER
Date : 08/01/99
Fichier : 0231081D.SCH
8 / 10
023.1081D
Carte Mère 8 Têtes
PCB Main 8 Heads
Measure - Heads 2 & 3 (001)
DIAGNOSTICA STAGO

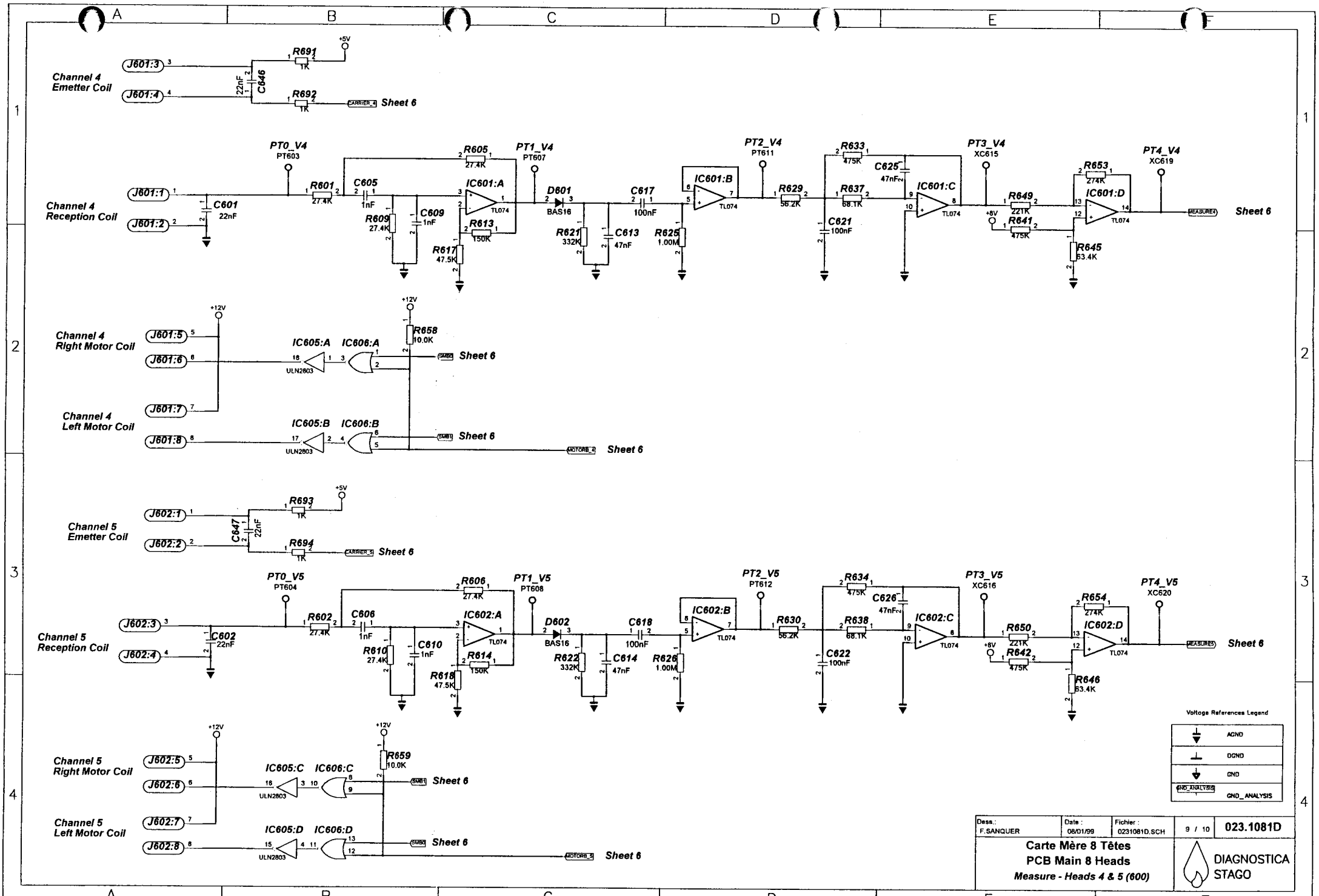
Channel 4 Emetter Coil
J601:3
J601:4
R691 1K
R692 1K
C646 22nF
+5V
CARRIER_4
Sheet 6
Channel 4 Reception Coil
J601:1
J601:2
C601 22nF
PT0_V4 PT603
R601 27.4K
C605 1nF
R605 27.4K
R609 27.4K
C609 1nF
IC601:A TL074
R613 150K
R617 47.5K
PT1_V4 PT607
D601 BAS16
R621 332K
C613 47nF
C617 100nF
R625 1.00M
IC601:B TL074
PT2_V4 PT611
R629 56.2K
R633 475K
R637 68.1K
C621 100nF
C625 47nF
IC601:C TL074
PT3_V4 XC615
R649 221K
R641 475K
+8V
R653 274K
IC601:D TL074
R645 63.4K
PT4_V4 XC619
MEASURE4
Sheet 6
Channel 4 Right Motor Coil
J601:5
J601:6
+12V
IC605:A ULN2803
IC606:A
R658 10.0K
SMB0
Sheet 6
Channel 4 Left Motor Coil
J601:7
J601:8
IC605:B ULN2803
IC606:B
SMB1
Sheet 6
MOTORB_4
Sheet 6
Channel 5 Emetter Coil
J602:1
J602:2
R693 1K
R694 1K
C647 22nF
+5V
CARRIER_5
Sheet 6
Channel 5 Reception Coil
J602:3
J602:4
C602 22nF
PT0_V5 PT604
R602 27.4K
C606 1nF
R606 27.4K
R610 27.4K
C610 1nF
IC602:A TL074
R614 150K
R618 47.5K
PT1_V5 PT608
D602 BAS16
R622 332K
C614 47nF
C618 100nF
R626 1.00M
IC602:B TL074
PT2_V5 PT612
R630 56.2K
R634 475K
R638 68.1K
C622 100nF
C626 47nF
IC602:C TL074
PT3_V5 XC616
R650 221K
R642 475K
+8V
R654 274K
IC602:D TL074
R646 63.4K
PT4_V5 XC620
MEASURE5
Sheet 6
Channel 5 Right Motor Coil
J602:5
J602:6
+12V
IC605:C ULN2803
IC606:C
R659 10.0K
SMB1
Sheet 6
Channel 5 Left Motor Coil
J602:7
J602:8
IC605:D ULN2803
IC606:D
SMB2
Sheet 6
MOTORB_5
Sheet 6
Voltage References Legend
AGND
DGND
GND
GND_ANALYSIS
Dess.: F.SANQUER
Date : 08/01/99
Fichier : 0231081D.SCH
9 / 10
023.1081D
Carte Mère 8 Têtes
PCB Main 8 Heads
Measure - Heads 4 & 5 (600)
DIAGNOSTICA STAGO

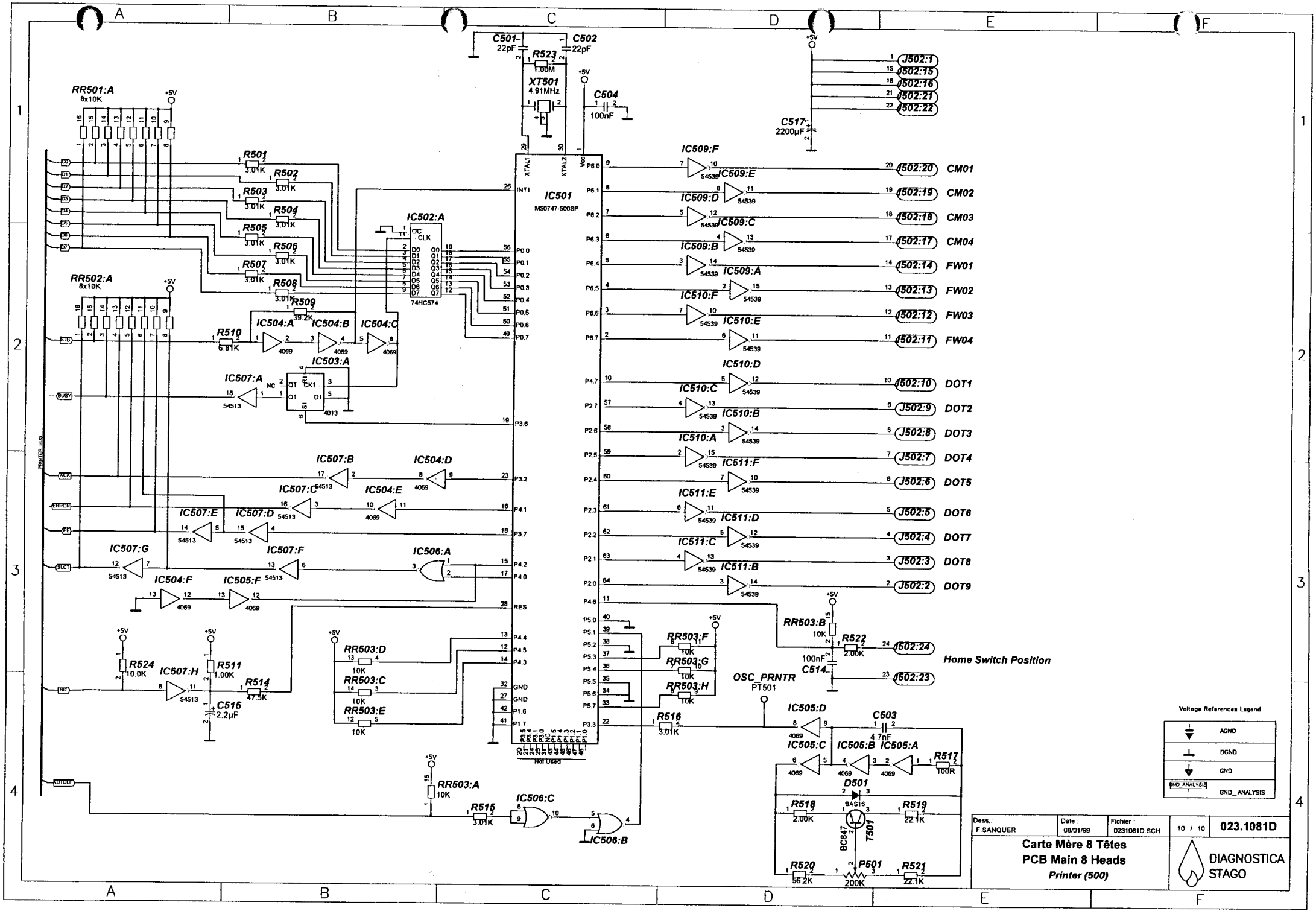
C501 22pF
C502 22pF
R523 1.00M
XT501 4.91MHz
C504 100nF
C517 2200µF
RR501:A 8x10K
RR502:A 8x10K
IC501 M50747-500SP
IC502:A 74HC574
IC503:A 4013
IC504:A IC504:B IC504:C IC504:D IC504:E IC504:F
IC505:A IC505:B IC505:C IC505:D IC505:F
IC506:A IC506:B IC506:C
IC507:A IC507:B IC507:C IC507:D IC507:E IC507:F IC507:G IC507:H
IC509:A IC509:B IC509:C IC509:D IC509:E IC509:F
IC510:A IC510:B IC510:C IC510:D IC510:E IC510:F
IC511:A IC511:B IC511:C IC511:D IC511:E IC511:F
CM01 CM02 CM03 CM04 FW01 FW02 FW03 FW04
DOT1 DOT2 DOT3 DOT4 DOT5 DOT6 DOT7 DOT8 DOT9
Home Switch Position
OSC_PRNTR PT501
D501 BAS16
T501 BC847
P501 200K
Not Used
PRINTER BUS
Voltage References Legend
AGND
DGND
GND
GND_ANALYSIS
Dess.: F.SANQUER
Date : 08/01/99
Fichier : 0231081D.SCH
10 / 10
023.1081D
Carte Mère 8 Têtes
PCB Main 8 Heads
Printer (500)
DIAGNOSTICA STAGO

8.1.3. Weld Layout

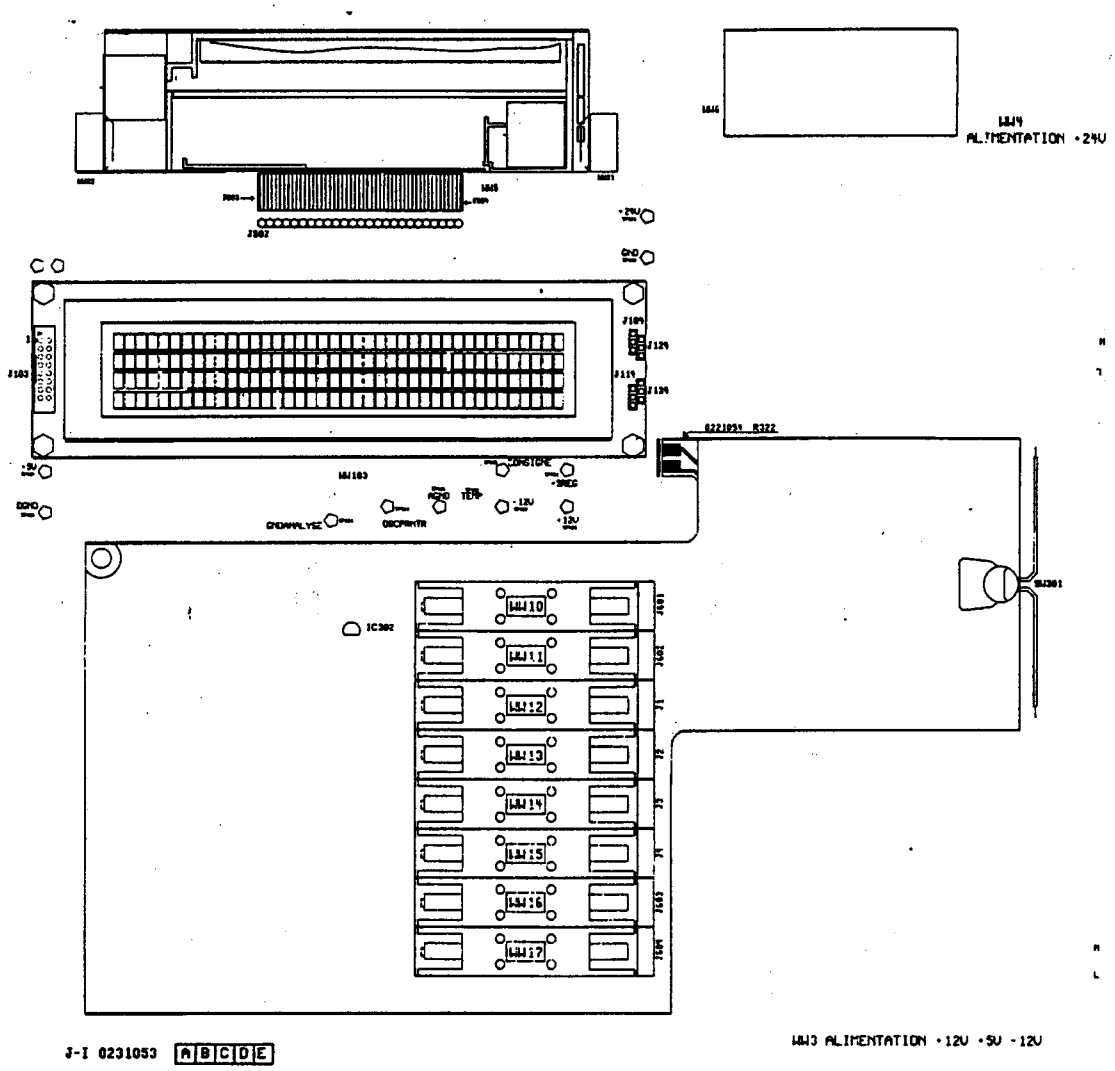

Fig. 9 - Mother PC Board Layout Weld Side

8.1.4. Component Layout

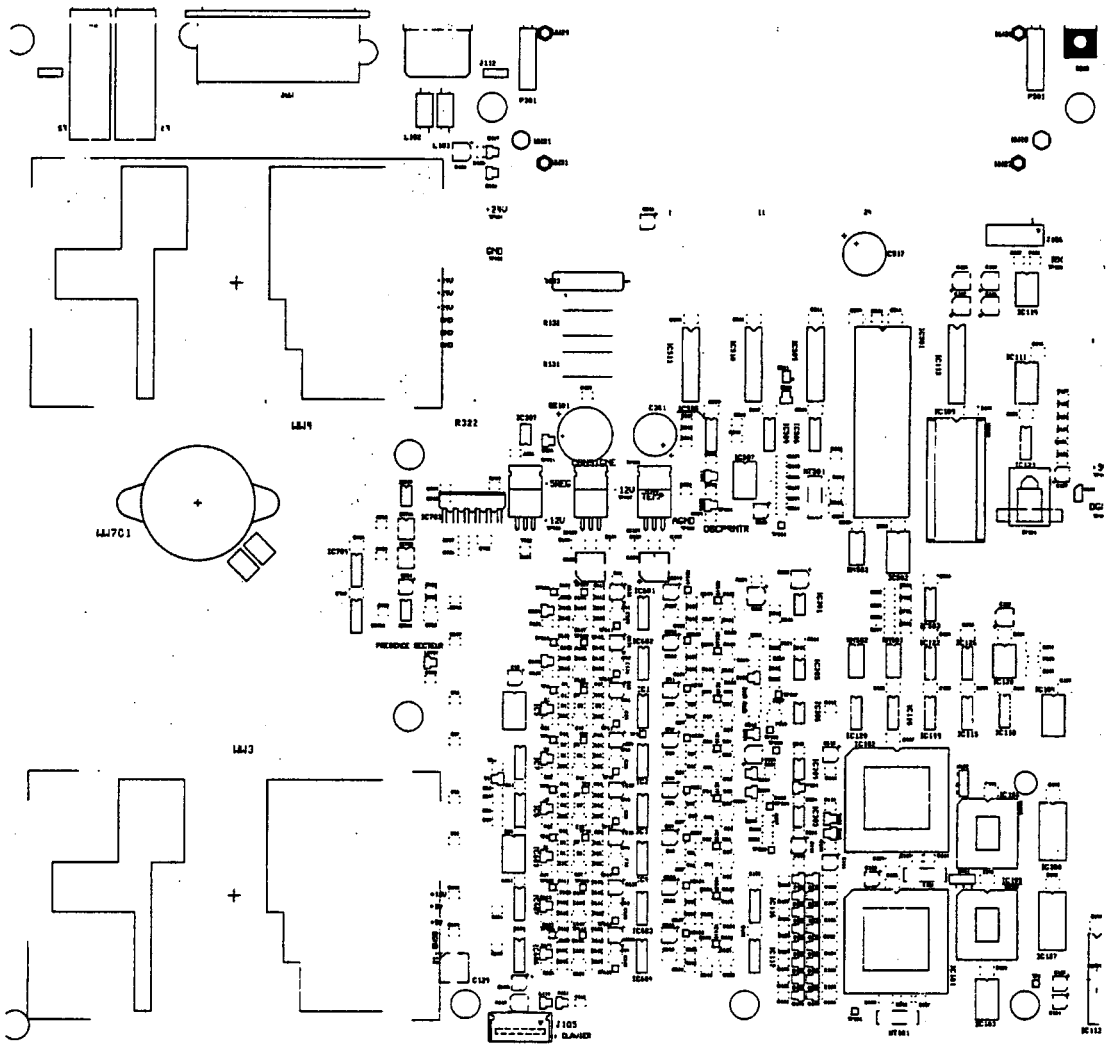

Fig. 10 - CPU Board Layout Component Side

8.2. Keyboard

8.2.1. Electronic Schematic

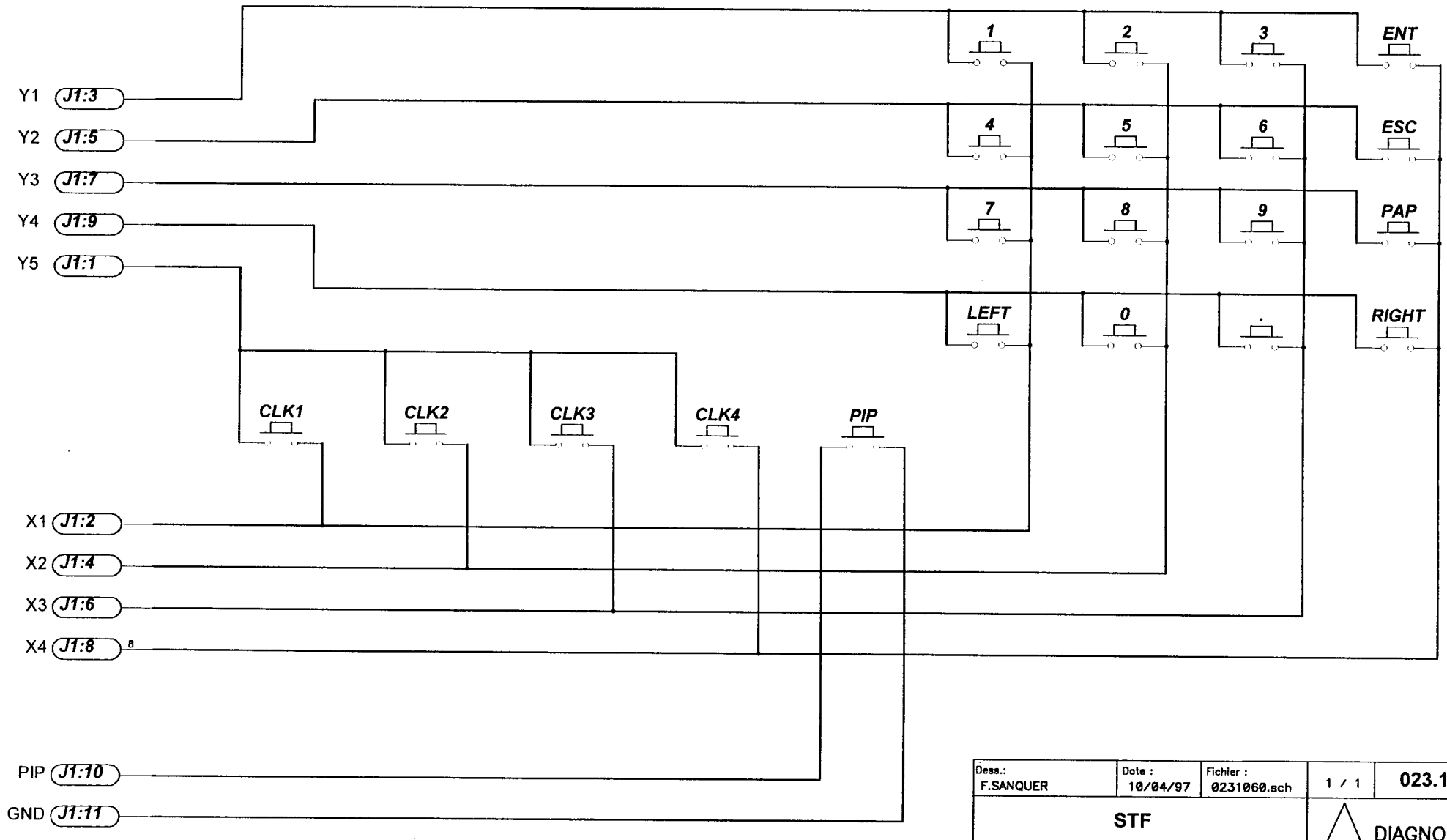

Dess.:	Date :	Fichier :		
F.SANQUER	10/04/97	0231060.sch	1 / 1	023.1060

STF

CARTE CLAVIER

DIAGNOSTICA STAGO

8.3. Measurement Head

8.3.1. Electronic Schematic

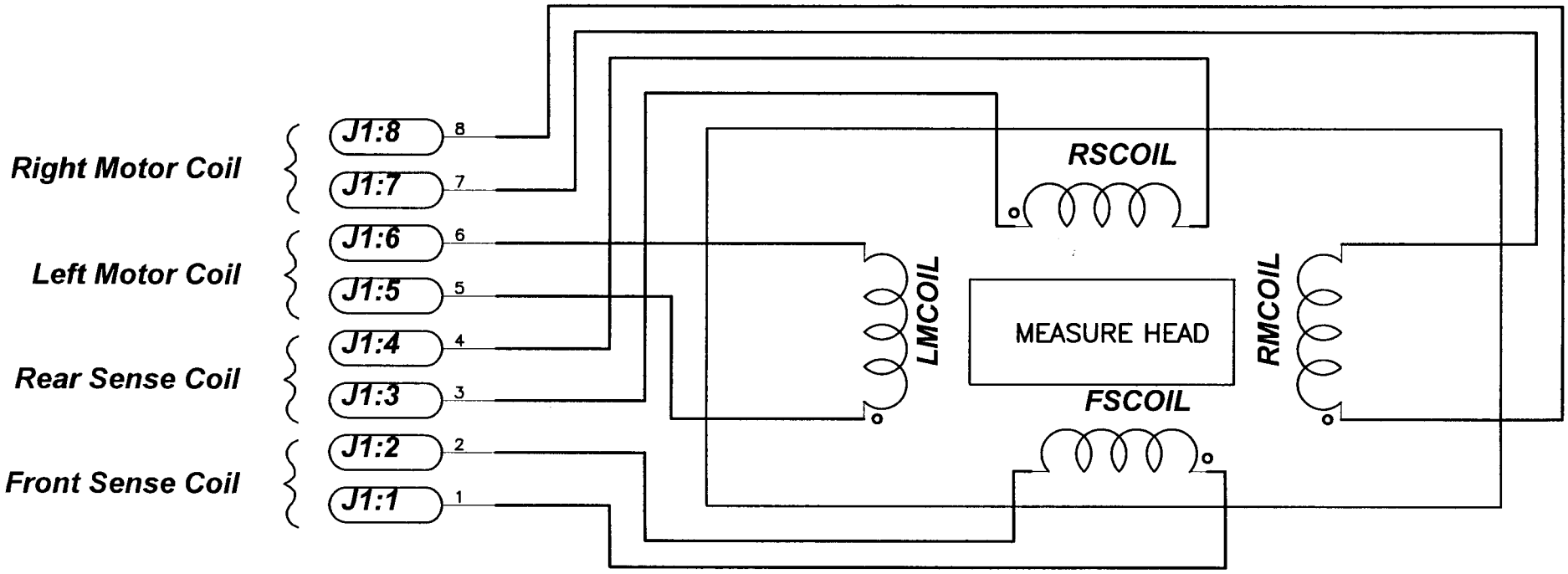

Dess.:	Date :	Fichier :	Page	
F.SANQUER	18/04/98	0231079.sch	1 / 1	023.1079

Carte Tête de mesure

PCB Mesure Head

This sheet: Main

DIAGNOSTICA STAGO

8.3.2. Cell Layout

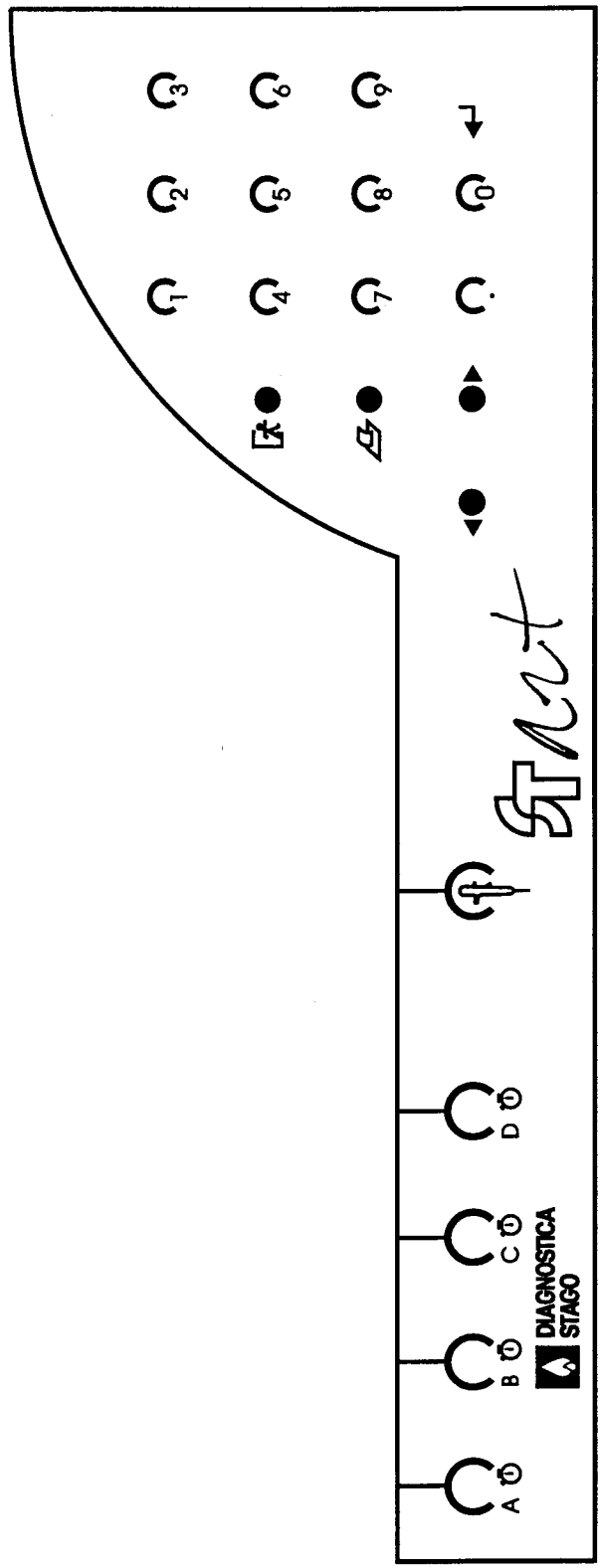

9. SPARE PARTS LIST

9.1. Spare Part List

Part Number = reference as used in technical drawings and in the ST art Service Manual and for ordering spare parts to Diagnostica Stago.

Part Number	English Part Name
S-0012455	CONDUCTOR THERMAL GREY
S-0012456	SPACER MOTHER BOARD ST ART
S-0012523	BLOCK MEASUREMENT / 8 CELLS (**)
S-0012524	BLOCK MEASUREMENT / 4 CELLS (*)
S-0012614	CONDUCTOR THERMAL BLUE
S-0012621	INSULATING THERMAL
S-0012623	CUVETTE TEMPERATURE ST ART
S-0021062	COVER UPPER / 4 CELLS (*)
S-0021068	COVER UPPER / 8 CELLS (**)
S-0032405	COVER LOWER
S-0032406	COVER REAR
S-0032407	CUT PAPER ST ART
S-0091019	THERMAL PAPER (25M)
S-0091186	PIPETTE ST ART
S-0091187	FINNTIPS 1.25ML (X100)
S-0091188	FINNTIPS 2.50ML (X100)
S-0091208	PROTECTIVE BAG ST ART
S-0091209	FOOT ST ART (X4)
S-0091210	EXTRACTOR EPROM PLCC
S-0231053	PCB MOTHER ONLY / 4 CELLS (*)
S-0231054	PCB HEATING / 4 & 8 CELLS(*)
S-0231060	KEYBOARD ST ART
S-0231091	HEAD MEASUREMENT V2
S-0231079	HEAD MEASUREMENT
S-0231081	PCB MOTHER ONLY / 8 CELLS (**)
S-0246016	SOCKET PIPETTE
S-0250386	CABLE GROUND L=100
S-0254073	CABLE RS232
S-0254078	ADAPTOR FO R DUAL PIPETTE

Part Number	English Part Name
S-0301024	POWER CORD EUROPEAN
S-0301041	FUSE HOLDER 6.3X32
S-0301048	BATTERY
S-0301073	POWER CORD US ST4/-ART
S-0301216	FUSE (T) 3A 6.3X32 UL (X10)
S-0301232	PLUG RS232
S-0301256	FILTER MAINS
S-0301257	POWER SUPPLY (+24V)
S-0301258	POWER SUPPLY (+5/+12/-12V)
S-0301259	FAN +24V 62X62X15
S-0301263	MAINS BLOCK
S-0321020	PROBE TEMPERATURE
S-0931047	MANUAL OP. STF-4 FR/GB 27638
S-0931048	MANUAL OP. STF-8 FR/GB 27639
S-40001037	MEMORY DATA NOVRAM
S-5100GSTFB210	EPROM "CSTFB VER. 2.10 GESTION"
S-5100GSTFU115	EPROM "GSTFU VER.1.15"
S-5100GSTUF113	EPROM MANAGE "GSTUF VER.1.15"
S-5100MSTFB210	EPROM "MSTFB VER.2.10 MEASURE"
S-99VC001	DISPLAY LCD
S-99VC002	PRINTER THERMAL
S-999AV14	MOTOR STIRRING
S-99VC003	POWER CORD EUROPEAN
S-99VC009	BLOCK 4 MEASURE HEAD V2

(*) : To command only the version 4 channels
(**) : To command only the version 8 channels

9.2. Illustrated Spare Part List

Actually non available, this list have to be communicate via a technical service bulletin.
Refer to "Technical Informations" chapter 10 of this manual.

10. TECHNICAL INFORMATION

☞ **Note:** A technical bulletin is used to communicate a technical information.
Use the document "How to read a technical bulletin" appended to read this bulletin.

The technical bulletin have to be preserved absolutely either in the service manual or in a specific binder.

A "Service Flash" will be used to communicate an ***urgent*** technical information.
This document is used to:

- Warn to a using, maintenance or transport hazardous;
- Inform to a systematic fault identified after expedition with the solution to solve the fault.

These informations contained in these "Service Flashs have to be preserved but are generally temporary.

11. USER'S RS232-C INTERFACE

11.1. Physical Characteristics

- Interface : Serial, RS232 C Standard.
- Connector on ST art : Male, 9-pin connector.
- handshaking : no control line is used.
- Baud rate : 9600 Bauds.
- Parity : no
- Data bit : 8
- Stop bit : 1

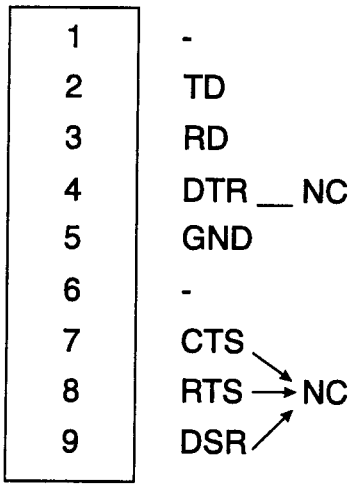

11.2. Exchange Protocol

The data are sent on line as soon as the results are obtained with a specific format without ST art control.

- ***Format:***

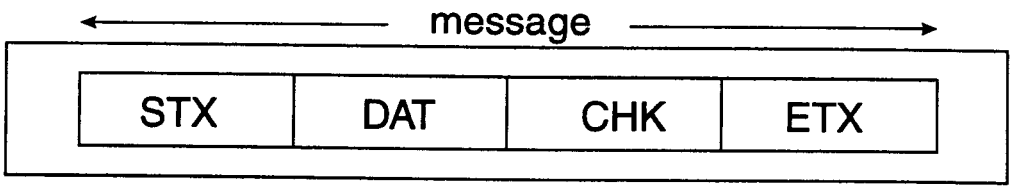

STX : ASCII character 2, marker of the beginning of the message.

DAT : Data to be transmitted.

CHK : Checksum, result from an exclusive OR of all the characters of the DAT block, followed by a logic OR with the 40h value.

EXT : ASCII character, marker of the end of the message.

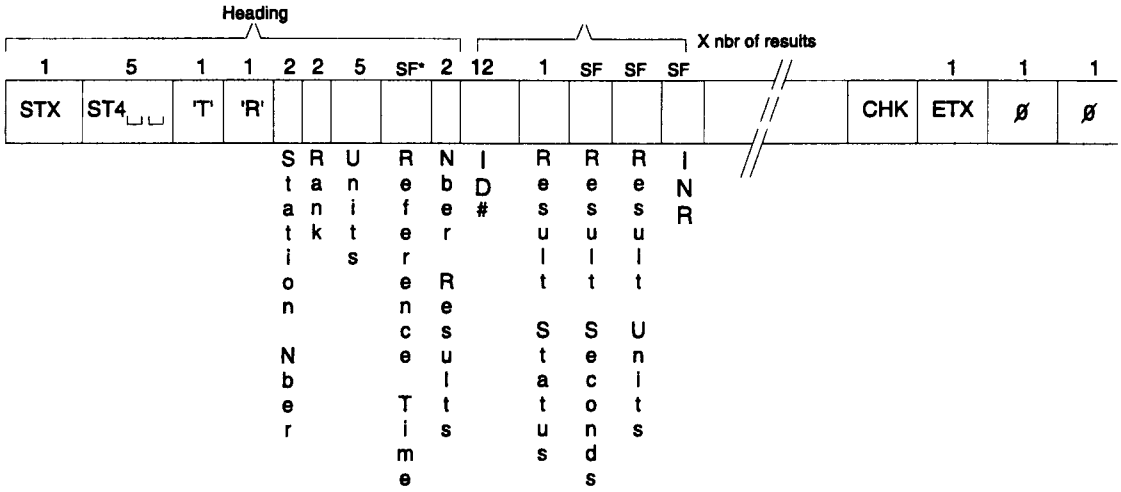

* SF : Standard Format (8) ####.###

- ***Station number:***

Number of 2 figures, all station number less than 10 are justified on the left by a space.

- ***Patient Identification Numbers (ID#)***:

Number of 4 figures, justified on the left by spaces.

- ***Analysis Rank:***

Number of 2 figures, all rank numbers less than 10 are justified on the left by a zero.

Table 1 : RANK ——————————> ANALYSIS

Rank	Analysis	Rank	Analysis
01	PT	16	VII-X
02	APTT	17	X
03	Fibrinogen	18	Staclot PNP
04	Unfractionated Heparin	19	VIII
05	Thrombin Time	20	IX
06	SPA	21	XI
07	Reptilase Time	22	XII
08	Staclot LA	23	Protein S
09	LMWH	24	Protein C
10	Mode 1	25	Mode 3
11	Mode 2	26	Mode 4
12	II	27	Not used
13	Not used	28	Not used
14	V	29	Mode 5
15	VII		

- ***Result:***

Fixed format : ####.###, justified on the left by spaces.

- ***Unit:***

The unit is given on a text format (5 characters).

- ***Result status:***

Is given by an ASCII code :

ASCII code	Result status on ST art
"S"	Single determination, completed
"D"R "F"	duplicate determination, completed
"E"	greater than the maximum time
"R"	less than the minimum time
"I"	refused result greater than the given margin.

12. LABORATORY ACCREDITATIONS

Identification	Title
QC-ST4-014	Verification of the temperature
QC-ST4-015	Verification of timing
QC-ST4-016	Validation of automatic pipettes

ACCREDITATION OF LABORATORIES		
DIAGNOSTICA STAGO INSTRUMENTATION DIVISION	**VERIFICATION OF THE TEMPERATURES OF THE ST4/ST4BIO/ST2/ ST art**	Identification No.: **QC-ST4-014-B** Sheet: 1/2
Author: Name: B. LUCET Date: 2/12/99	**Checked:** Name: J.P. MERCEREAU Date: 02/02/99	**Approved:** Name: P. JEANDAUX Date: 02/02/99

ISSUE	DATE	NATURE OF MODIFICATION	Circulation	
A	27/10/1997	First issue	Manufacture	☐
B	15/01/1999	ST art introduction	Service Dpt	☐
			Spec.	☐

- PURPOSE

This procedure is for the verification of the temperatures of the ST4, ST4BIO, ST2 and ST art:

- in the measurement zone (channel 2);
- as well in the measurement zone (channel 7) for the 8 channels ST art;
- in the reagent 1 zone (hot).

- PRINCIPLE

The temperature is measured using a thermistor and a multimeter used as an ohmmeter.

Note: the results given in kilohms (kΩ) are inversely proportional to the temperature.
An increase in resistance of 0.1 kΩ is equivalent approximately to a fall of 0.05°C in temperature.

I - APPARATUS USED

- 1 temperature cuvette (Ref.: 0012231),
- 1 DIN 22 vial containing 5 ml of water,
- 1 temperature probe (Ref.: thermometer UT 443 SX1) with the relevant chart,
- 1 multimeter with minimum precision ± 0.3%,
- thermal grease (Ref.: 0911002).

V - CALIBRATION OF MEASUREMENT INSTRUMENTS

- The multimeter should be calibrated with its probe (thermistor) at least once a year by an organisation associated with an international standard (for example: the Bureau National de Métrologie).
- The multimeter and the thermistor cannot be used if they have not been calibrated in the last year.

- CUMULATIVE ERRORS

Multimeter	=	0.008°C
Probe	=	0.050°C
Other errors related to the procedure	=	0.042°C
Total systematic error	=	0.1°C

his document is the exclusive property of DIAGNOSTICA STAGO and may not be communicated to third parties or reproduced without prior permission.

VI - VERIFICATION CONDITIONS

- Ambient temperature between + 15 and + 32°C;
  Note: Wait 1 hour at ambient temperature if the instrument is coming out from the heating room.
- No ventilation close to or above the apparatus.

VII - PROCEDURE

- Switch on the instrument;
- Place the temperature cuvette in the test channel (2nd channel counting from the back of the apparatus);
- Place a temperature test vial in the test position;
- Wait 30 minutes;
- Immerse the end of the temperature probe in the temperature cuvette (the end of the probe should be smeared with thermal grease), wait the display stabilisation at ± 20Ω (0.02kΩ at least 10 seconds and note the result on the results sheet;
- Immerse the end of the temperature probe in the temperature test vial, wait the display stabilisation at 20Ω (0.02kΩ at least 10 seconds, and note the result obtained on the results sheet).

- *Only for 8 channels ST art:*
- Place a temperature cuvette in the other test channel (7th channel, counting from the back of the apparatus);
- Immerse the end of the temperature probe in the temperature cuvette (the end of the probe should be smeared with thermal grease), wait the display stabilisation at ± 20Ω (0.02kΩ at least 10 seconds, and note the result on the results sheet).

VI - ACCEPTANCE CRITERION

The resistance R should be as follows:

- On measurement position:

$$53.00\ k\Omega \leq R_{MEAS} \leq 55.00\ k\Omega$$

(i.e., a temperature T_{MEAS} such that $36.8°C \leq T_{MEAS} \leq 37.8°C$)

- On reagent position:

$$R_{MEAS} - 3.00\ k\Omega \leq R_{REA} \leq R_{MEAS} + 2.00\ k\Omega$$

(i.e., a temperature T_{REA} such that $T_{MEAS} - 1.0°C \leq T_{REA} \leq T_{MEAS} + 1.5°C$)

This document is the exclusive property of DIAGNOSTICA STAGO and may not be communicated to third parties or reproduced without prior permission.

QC-ST4-014-B
Appendix 1

VALIDATION OF TEMPERATURES

Apparatus ST4/ST4BIO/ST2/ST art No.

Date: .. / .. / ..

Multimeter No. Probe No.:

	Result (kΩ)	Acceptance criterion
Temperature channel 2 measurement unit		$53.00\ k\Omega \leq R_{MEAS2} \leq 55.00\ k\Omega$
Temperature channel 7 measurement unit (only for the 8 channels ST art)		$53.00\ k\Omega \leq R_{MEAS7} \leq 55.00\ k\Omega$
Reagent temperature (hot)		$R_{MEAS2} - 3.00\ k\Omega \leq R_{REA} \leq R_{MEAS2} + 2.00\ k\Omega$

Name of Technician:

Signature:

ACCREDITATION OF LABORATORIES		
DIAGNOSTICA STAGO INSTRUMENTATION DIVISION	**VERIFICATION OF TIMING OF THE ST4/ST4BIO/ ST2/ST art**	Identification No.: **QC-ST4-015-B** Sheet: 1/4

Author:	Checked:	Approved:
Name: B. LUCET Date: 2/2/99	Name: J.P. MERCEREAU Date: 2/2/99	Name: P. JEANDAUX Date: 02/02/99

ISSUE	DATE	NATURE OF MODIFICATION	Circulation	
A	27/10/1997	First issue	Manufacture	☐
B	15/01/1999	ST art intoduction	Service Dpt	☐
			Spec.	☐

I - PURPOSE

The aim of this procedure is to verify the times measured by the ST4/ST4BIO/ST2/ST art.
The measured deviation between the ST4/ST4BIO/ST2/ST art and a calibrated manual timer should match the specifications of the ST4/ST4BIO/ST2/ST art.

II - APPARATUS USED

- 1 strip with 4 cuvettes of consumables,
- Balls,
- 1 calibrated manual timer.

III - CALIBRATION

Manual timer, precision: 1/10 second.

The manual timer should be calibrated at least once every 6 months by an organisation using an international standard (in France, procedure QUAL065 - Reagent division, procedure for verifying and maintaining timers)

IV - CUMULATIVE ERRORS

Errors on timer:	:	0.1 s
Operator error:	:	0.1 s
Cumulative errors:	:	0.2 s for a measurement of 100 s
Accuracy of measurement:	:	0.2%

This document is the exclusive property of DIAGNOSTICA STAGO and may not be communicated to third parties or reproduced without prior permission.

V - TEST OF ST art TIMER

- Switch on the instrument,
- 1: Analysis [ent],
- 1: TP [ent],
- [ent],
- Simultaneously start the first incubation position timer and the manual timer,
- Stop the manual timer when the instrument displays 60 s of incubation,
- Note the result on the results sheet,
- Acceptance criterion: Time measured by the manual timer = 60 s ± 1,
- Return to the main menu using [Ret].

VI - TEST OF MEASUREMENT CHANNELS

6.1. Disconnection of the Pipette and Automatic Identification Mode

- **From the main menu:**
- 4: Set up [ent],
- 1: system parameters [ent],
- Go to **No. Patients** with the [ent] key,
- Change to automatic using the ▷ key if necessary,
- Validate with [ent]
- Change the status of the pipette connection using the ▷ key if necessary, to go to the unconnected state,
- Validate with [ent]
- [Ret],
- [Ret] to return to the main menu.

6.2. Changing the Parameters of the PT Test

The aim is to perform the tests with two determinations with a maximum time exceeding 60 s. Take care to note the status of the determination (single or double) and the max. time in order to return to it at the end of this procedure.

- **On the main menu:**
- 3: parameters [ent],
- 1: PT [ent],
- Change the maximum time to 70 s if necessary,
- If necessary, change the status of the determination to obtain a second measurement,
- Validate each change with the [ent] key,
- [Ret] to return to the main menu.

This document is the exclusive property of DIAGNOSTICA STAGO and may not be communicated to third parties or reproduced without prior permission.

6.3. Test of the 4 Timing Channels

- Place 1 strip of 4 cuvettes containing 1 ball and 300 µl of water per cuvette in the test position,
- 1: analysis [ent],
- 1: PT [ent],
- [ent].

The strip of cuvettes will be replaced after each test.

6.3.1. Test of the 1st Channel

- Simultaneously start the test (by pressing the Pipette key) and the manual timer,
- When the manual timer shows precisely 60 seconds, quickly remove the strip of cuvettes,
- Note the time indicated by the instrument on the results sheet.

6.3.2. Test of the 2nd Channel

Proceed as for channel 1.

6.3.3. Test of the 3rd Channel

- Press the Pipette key twice to cancel channels 1 and 2,
- Simultaneously start the test on channel 3 and the manual timer,
- When the manual timer indicates 60 seconds precisely, quickly remove the strip of cuvettes,
- Note the time indicated by the instrument on the results sheet for channel 3.

6.3.4. Test of the 4th Channel

- Simultaneously start the test of channel 4 and the manual timer,
- When the manual timer indicates 60 seconds precisely, remove the strip of cuvettes,
- Note the time indicated by the instrument on the results sheet.

6.4. Return to the Initial Status of the PT Parameters and the System Parameters

- Return to the main menu by [Ret],
- 3: Parameters [ent],
- 1: PT [ent],
- Reset the max. time and the single/double determination to the same status as before the modification (if any),
- Validate each change with the [ent] key,
- Return to the main menu by [Ret],
- 4: Set up [ent],
- 1: system parameters [ent],
- If necessary, change the mode of identification and status of the pipette connection using the ▷ key to return them to the initial state,
- Validate each change with the [ent] key.

This document is the exclusive property of DIAGNOSTICA STAGO and may not be communicated to third parties or reproduced without prior permission.

6.5. Results

* The time displayed for each channel should be 60 s ± 1
* The difference between the maximum and minimum times should be 3%

$$D = \frac{T\,max - T\,min}{T\,max} \times 100$$

Note: correspondence of keys between ST4/ST4BIO/ST2/ ST art

ST4/ST2	ST4BIO	ST art
ent	↵	↵
Ret		
▶	▷	▶

This document is the exclusive property of DIAGNOSTICA STAGO and may not be communicated to third parties or reproduced without prior permission.

QC-ST4-015-B
Appendix 1

RESULTS SHEET

VALIDATION OF TIMING

Apparatus ST4/ST4BIO/ST2/ST art No.

Date: .. / .. / ..

I - TEST OF TIMER

Time measured by the manual timer:

Acceptance criterion: 60 s ± 1

II - TEST OF MEASUREMENT CHANNELS

Channel	Result (T)
1	
2	
3	
4	
5	
6	
7	
8	

$$D = \frac{T\ max. - T\ min.}{T\ max.} \times 100 =$$

Acceptance criterion: $T = 60\ s \pm 1$
$D \leq 3\%$

S = standard deviation n = number of measurements (minimum 10)
$\overline{V}$ = mean volume Vi = individual volume

$$CV\% = \frac{S \times 100}{\overline{V}}$$

CV = coefficient of variation.

IV - PROCEDURE FOR VERIFYING PIPETTES BY GRAVIMETRY

4.1. Apparatus

- Electronic precision balance with sensitivity of at least 0.1 mg,
- Deionised water (for example: Biosedra water),
- Weighing container (capacity 10 to 50 times greater than the test container),
- Syringes suitable for the pipette (1.25 ml and/or 2.50 ml syringe),
- Use the same syringe for all measurements in a given series.

4.2. Procedure

- Switch on the balance;
- Put some water-soaked cottonwool in the balance enclosure;
- Close the balance door;
- Leave to saturate for 10 minutes;
- Place a small quantity of water in the weighing container;
- Select the desired volume on the pipette;
- Position the syringe;
- Pre-rinse twice;
- Place the weighing container on the balance plate;
- Set the zero;
- Distribute the required volume;
- Read the weight and enter the value on the results sheet;
- Perform a total of 10 distributions and weighings.

V - POSITIONS TO BE CHECKED

5.1. 1.25-ml Syringe

- Determine:
  - 1 set of 10 values in position 1, or 25 µl;
  - 1 set of 10 values in position 5, or 125 µl.

This document is the exclusive property of DIAGNOSTICA STAGO and may not be communicated to third parties or reproduced without prior permission.

5.2. 2.5-ml Syringe

- Determine:
  - 1 set of 10 values in position 1, or 50 µl;
  - 1 set of 10 values in position 5, or 250 µl.

VI - SPECIFICATIONS

* *Error on precision*

  The maximum tolerated error on precision is ± 2%

* *Error on reproducibility*

  The coefficient of variation should be ≤ 1%.

This document is the exclusive property of DIAGNOSTICA STAGO and may not be communicated to third parties or reproduced without prior permission.

ACCREDITATION OF LABORATORIES		
DIAGNOSTICA STAGO INSTRUMENTATION DIVISION	**VALIDATION OF AUTOMATIC PIPETTES OF THE ST4/ST4BIO/ ST2/ST art**	Identification No.: **QC-ST4-016-B** Sheet: 1/3

Author:	Checked:	Approved:
Name: B. LUCET P.O Date: 02/02/99	Name: J.P. MERCEREAU Date:02/02/99	Name: P. JEANDAUX Date: 02/02/99

ISSUE	DATE	NATURE OF MODIFICATION	Circulation		
A	27/10/1997	First issue		Manufacture	o
B	15/01/1999	ST art introduction		Service Dpt	o
				Spec.	o

I - PURPOSE

To check the accuracy and reproducibility of all volume measurements made using an Eppendorf® or Finnpipette® multiple automatic pipette.

II - SCOPE OF APPLICATION

Eppendorf® or Finnpipette® multiple automatic pipettes, that may or may not be connected to the intrument.

III - DEFINITIONS

* *Error on precision*

This is the difference between the mean value of a set of consecutive measurements of a given volume and its nominal value.
This difference, whether positive or negative, is expressed in the unit of the value measured.

$E = V - V_0$ $\qquad$ V_0 = Nominal volume

V = Mean volume

$$E\% = \frac{(V - V_0) \times 100}{V_0}$$

* *Error on reproducibility*

This is reflected quantitatively in the random dispersion of a series of similar measurements.
It is expressed as the standard deviation, or the coefficient of variation.

It concerns a group of results within a series (repeatability).

$$S = \sqrt{\frac{\Sigma_{i=1}^{n} (\overline{V} - V_i)^2}{n - 1}} = \sqrt{\frac{\text{Sum of the squares of the deviations from the mean}}{\text{Number of values} - 1}}$$

This document is the exclusive property of DIAGNOSTICA STAGO and may not be communicated to third parties or reproduced without prior permission.

QC-ST4-016-B
Appendix 1

RESULTS SHEET

VALIDATION OF AUTOMATIC PIPETTES

Apparatus ST4/ST4BIO/ST2/ST art No.

Identification of Pipette:

Date: .. / .. / ..

1. 1.25-ml Syringe:

	25 µl series		125 µl series	
	Weighings	Differences	Weighings	Differences
MEAN				
Error on precision				
SD				
CV%				

2. 2.5-ml Syringe:

	50 µl series		250 µl series	
	Weighings	Differences	Weighings	Differences
MEAN				
Error on precision				
SD				
CV%				

Acceptance criterion: Error on precision ± 2%
CV ≤ 1%