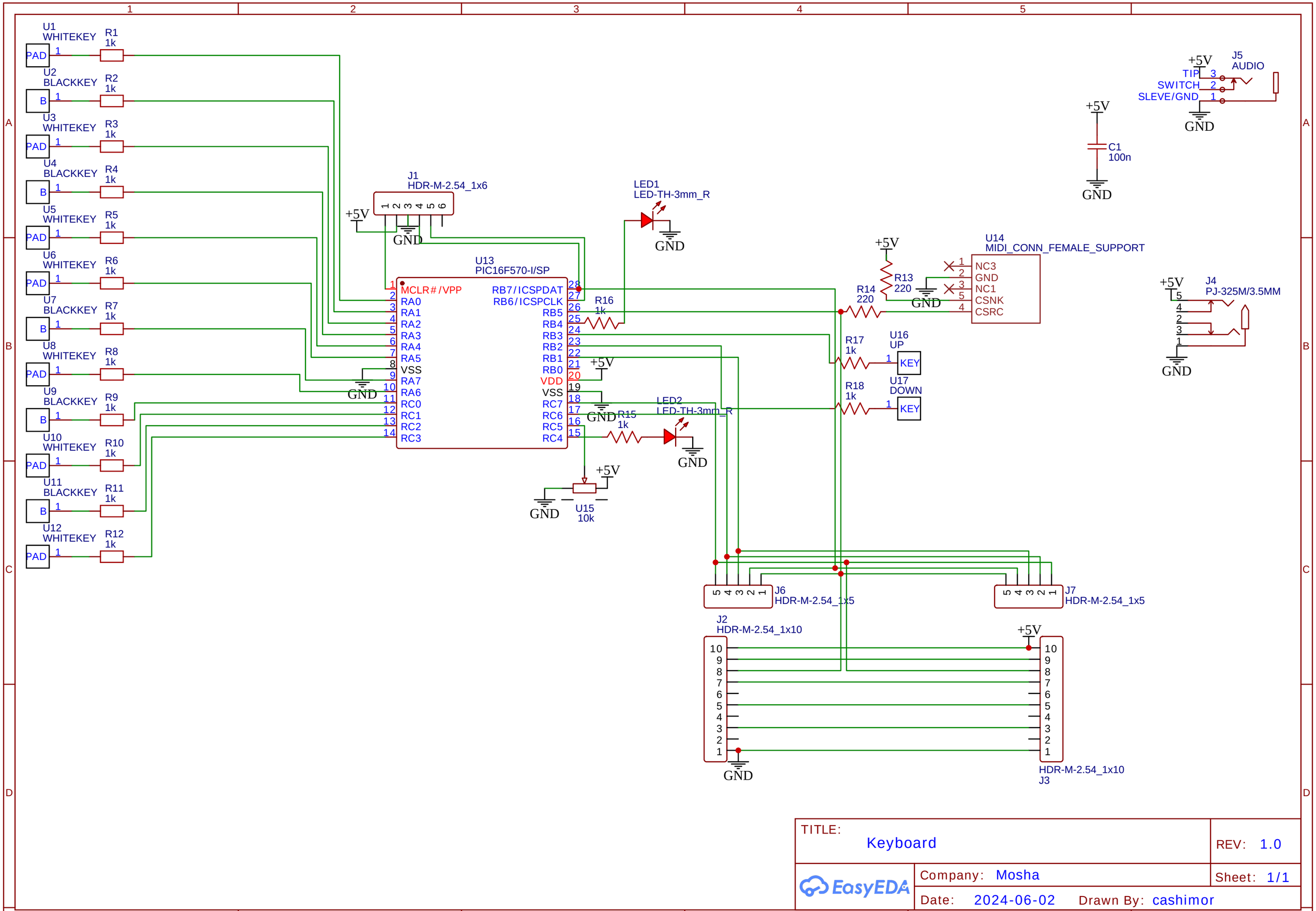

TITLE: Keyboard		REV: 1.0
EasyEDA	Company: Mosha	Sheet: 1/1
	Date: 2024-06-02 Drawn By: cashimor	