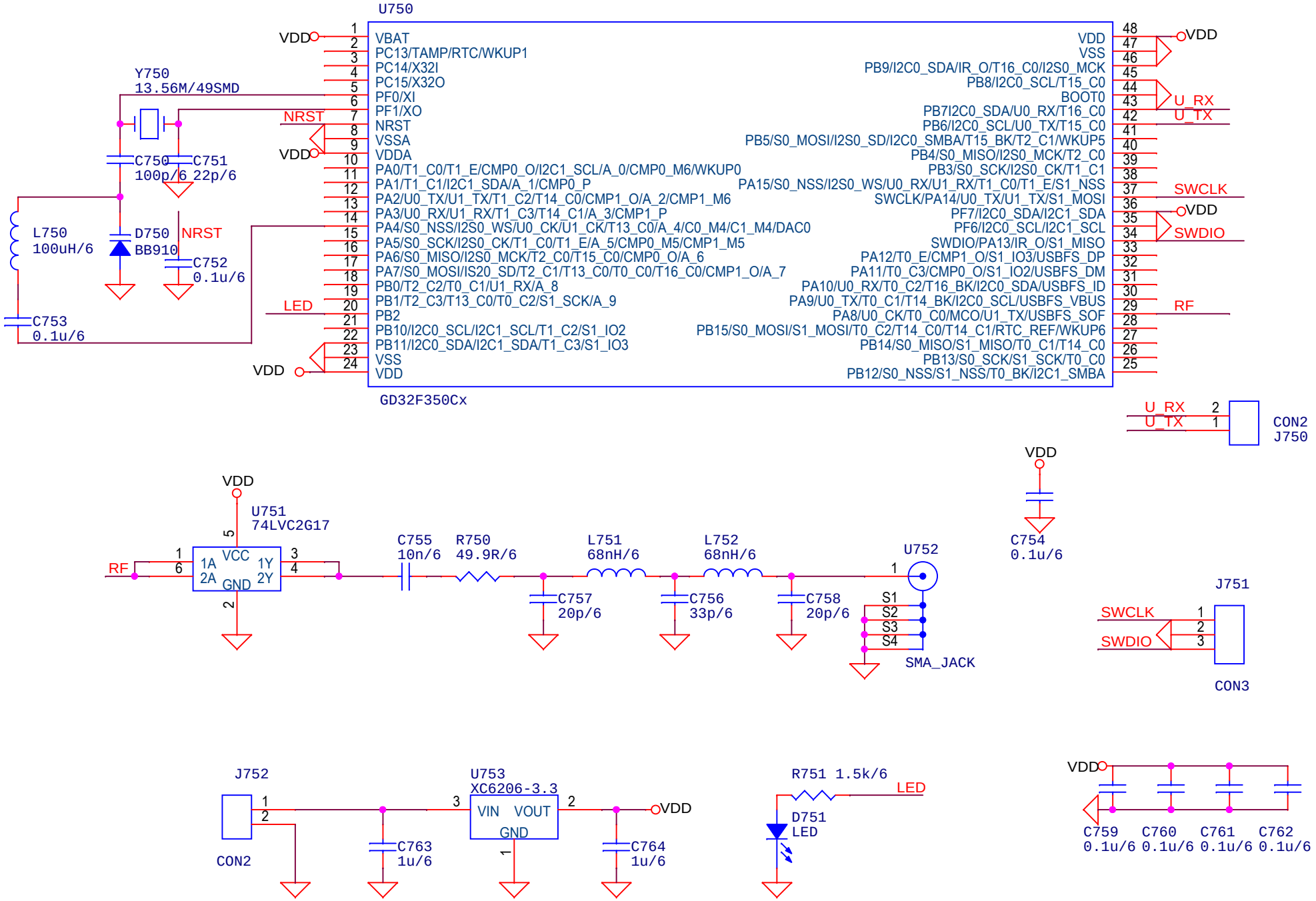

Size	Document Number	Rev
A	<Doc>	1.0
Date: Tuesday, September 06, 2022	Sheet 1 of 1	