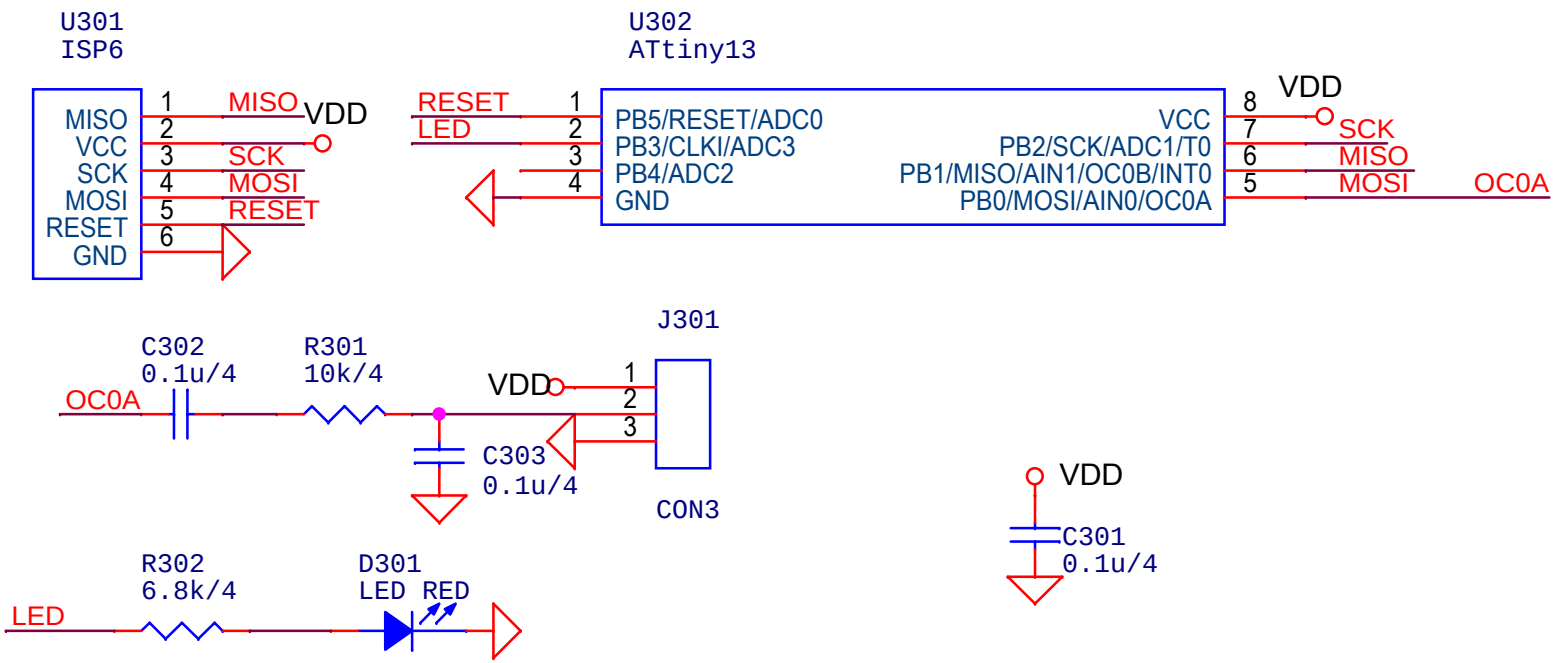

Size	Document Number	Rev
Custom	<Doc>	4.0
Date: Wednesday, February 17, 2021	Sheet 1 of 1	