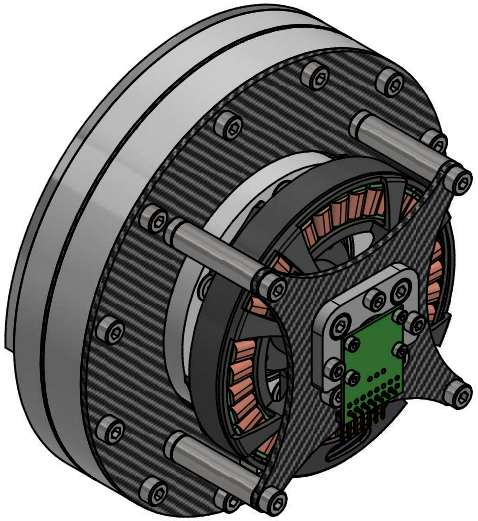

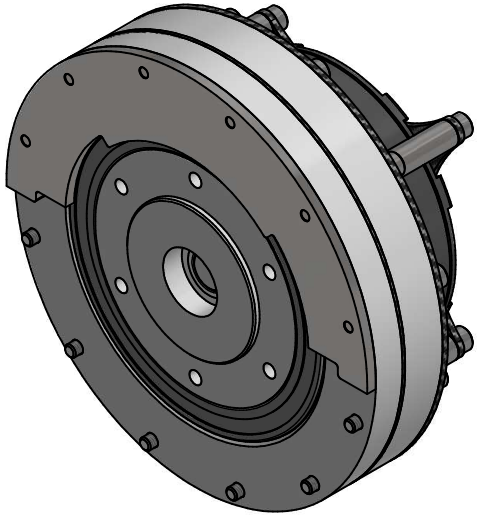

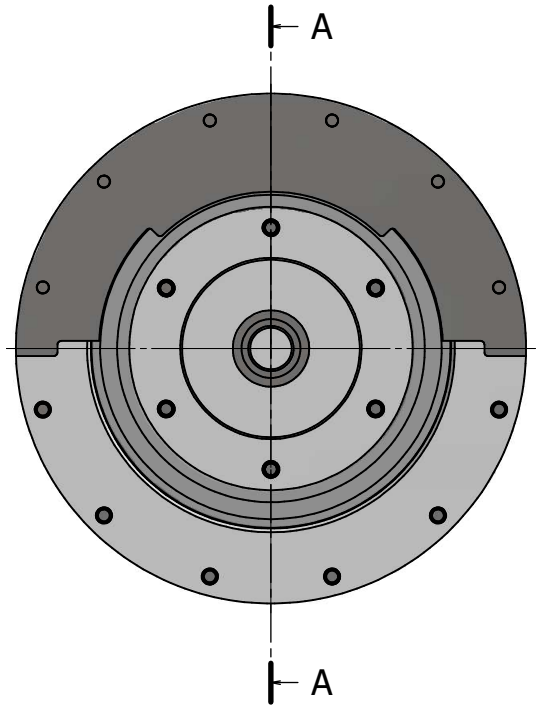


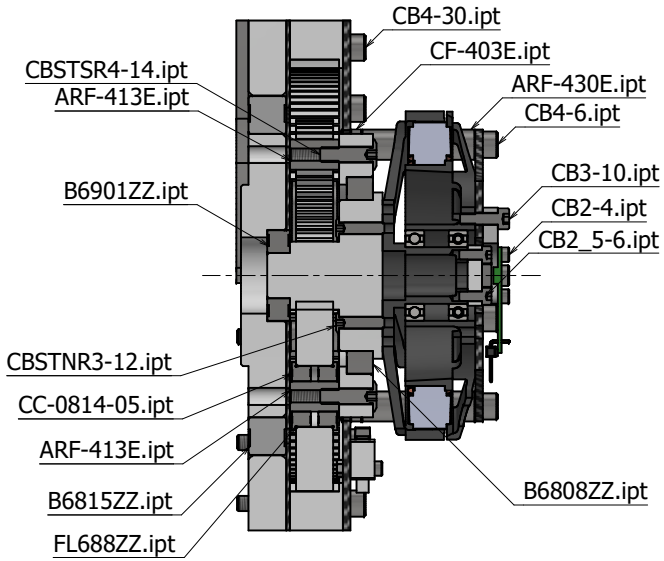


A-A

部品表

| ファイル名 | 数量 |
|---|---|
| 010_U8_ROTOR.ipt | 1 |
| 020_U8_STATOR_HOUSING.ipt | 1 |
| 021_U8_STATOR_COILS.ipt | 1 |
| 5972K155_BALL BEARING.ipt | 2 |
| ARF-413E.ipt | 6 |
| ARF-430E.ipt | 4 |
| AS5047P-TS_EK_AB.ipt | 1 |
| B6808ZZ.ipt | 1 |
| B6815ZZ.ipt | 1 |
| B6901ZZ.ipt | 1 |
| base16.ipt | 1 |
| base24.ipt | 1 |
| base26.ipt | 1 |
| base28.ipt | 1 |
| base29.ipt | 1 |
| base31.ipt | 1 |
| base32.ipt | 3 |
| base33.ipt | 1 |
| carbon_plate9.ipt | 1 |
| carbon_plate10.ipt | 1 |
| carbon_plate11.ipt | 1 |
| carbon_plate13.ipt | 1 |
| CB2_5-6.ipt | 2 |
| CB2-4.ipt | 4 |
| CB2-10.ipt | 2 |
| CB3-10.ipt | 3 |
| CB4-6.ipt | 8 |
| CB4-30.ipt | 12 |
| CBSTNR3-12.ipt | 4 |
| CBSTSR4-14.ipt | 10 |
| CC-0814-05.ipt | 6 |
| CF-403E.ipt | 4 |
| FL688ZZ.ipt | 6 |
| LBNR2.ipt | 2 |
| magnet.ipt | 1 |
| Pin Header 1x8 TH Angle Pitch 2.54mm.ipt | 1 |
| SB-203040.ipt | 4 |
| SS_5GL_ACTUATOR.ipt | 1 |
| SS_5GL_BASE.ipt | 1 |
| steel_plate2.ipt | 1 |

| | 名前 | 日付 |
|---|---|---|
| 作成者 | Yuta Kage | 2021/08/12 |
| 確認者 | | |
| 承認者 | | |

s-assy-unit-j2

1 / 3

A2