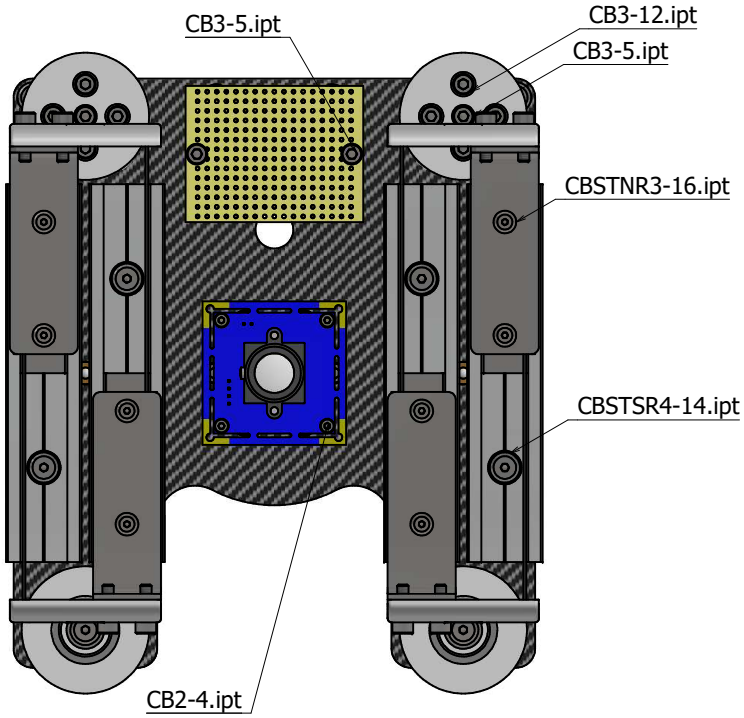

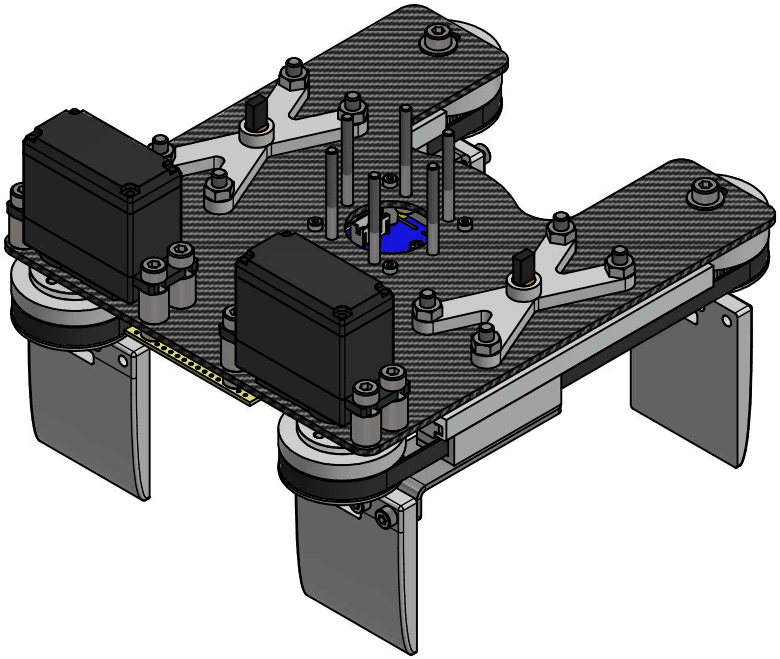

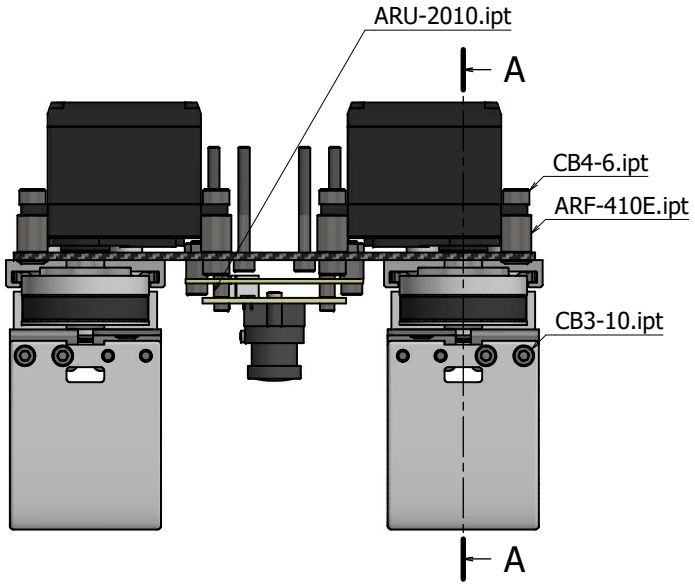

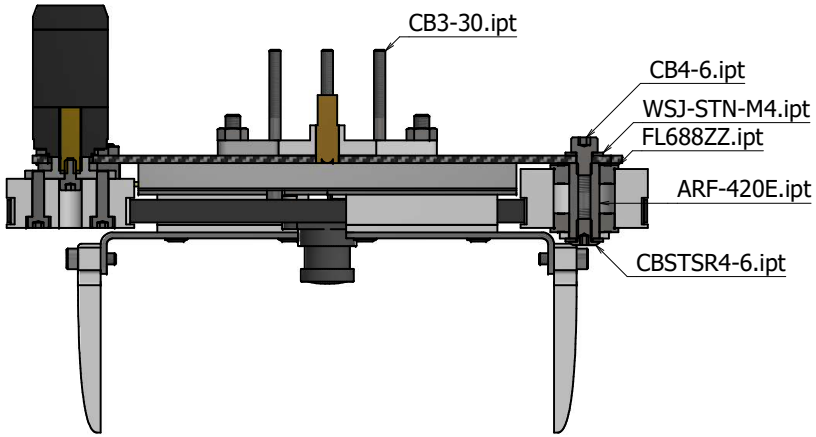

A-A (1 : 1)

部品表

ファイル名	数量
ARF-410E.ipt	8
ARF-420E.ipt	2
ARU-2010.ipt	4
base21.ipt	2
base22.ipt	4
base35.ipt	2
base36.ipt	2
base37.ipt	4
base38.ipt	4
base39.ipt	2
belt4.ipt	2
carbon_plate14.ipt	1
CB2-4.ipt	8
CB3-5.ipt	4
CB3-10.ipt	8
CB3-12.ipt	8
CB3-30.ipt	6
CB4-6.ipt	14
CBSTNR3-16.ipt	8
CBSTSR4-6.ipt	6
CBSTSR4-14.ipt	8
CC-0814-05.ipt	2
d_type_board.ipt	1
Eje.ipt	2
FL688ZZ.ipt	4
FU650AD5-C6.ipt	2
hexagonal_spacer_M3_5mm.ipt	2
horn.ipt	2
LBNR3.ipt	2
LBNR4.ipt	8
Medio.ipt	2
MR-20CS.ipt	4
mrs20-100.ipt	4
SC180-09687_MR-20CS.ipt	4
servo_Base.ipt	2
steel_plate1.ipt	4
Top.ipt	2
USB Cam model ELP-USBFHD01M-L21.ipt	1
WSJ-STN-M4.ipt	4

	名前	日付
作成者	Yuta Kage	2021/08/13
確認者		
承認者		

s-assy-gripper

1 / 1

A2