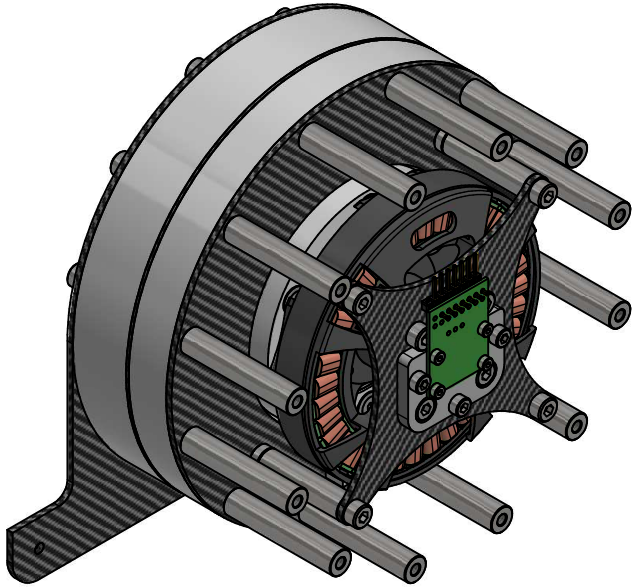

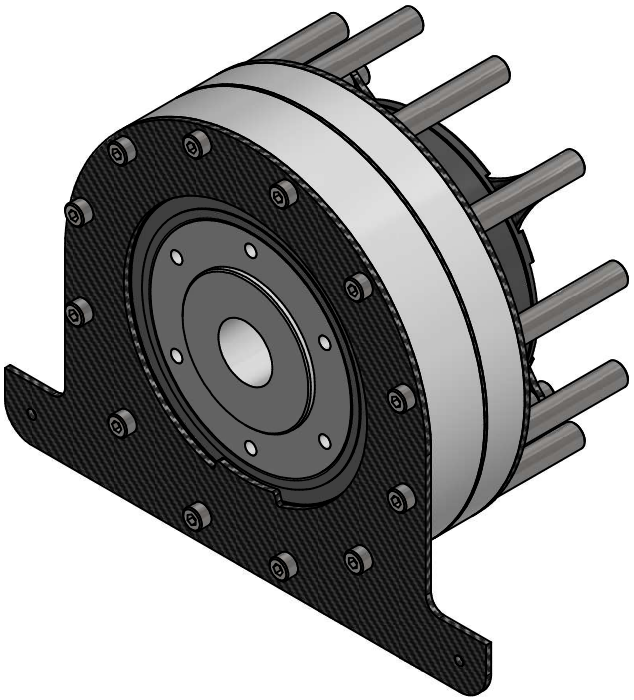

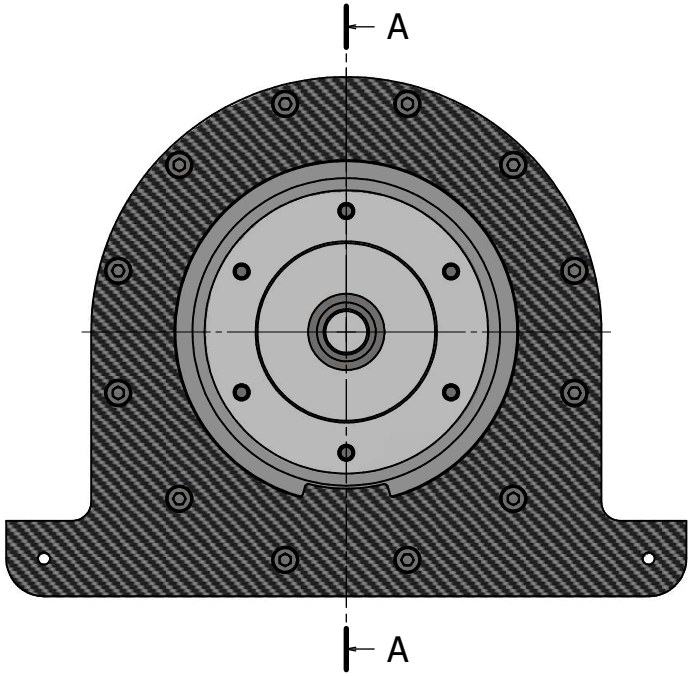

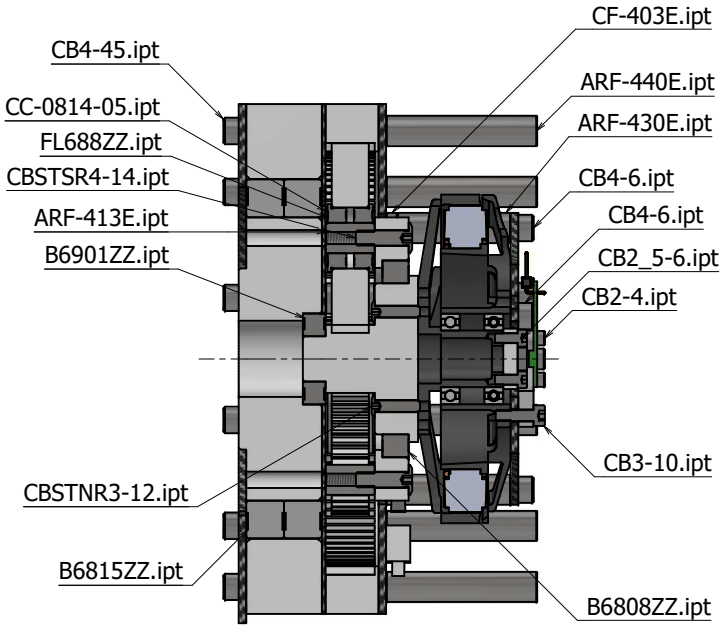

A-A

部品表

ファイル名	数量
010_U8_ROTOR.ipt	1
020_U8_STATOR_HOUSING.ipt	1
021_U8_STATOR_COILS.ipt	1
5972K155_BALL BEARING.ipt	2
ARF-413E.ipt	6
ARF-430E.ipt	4
ARF-440E.ipt	12
AS5047P-TS_EK_AB.ipt	1
B6808ZZ.ipt	1
B6815ZZ.ipt	2
B6901ZZ.ipt	1
base16.ipt	1
base24.ipt	1
base25.ipt	1
base27.ipt	1
base28.ipt	1
base29.ipt	1
base32.ipt	3
base33.ipt	1
carbon_plate1.ipt	1
carbon_plate9.ipt	1
carbon_plate10.ipt	1
carbon_plate11.ipt	1
carbon_plate13.ipt	1
CB2_5-6.ipt	2
CB2-4.ipt	4
CB3-10.ipt	3
CB4-6.ipt	8
CB4-45.ipt	12
CBSTNR3-12.ipt	4
CBSTSR4-14.ipt	6
CC-0814-05.ipt	6
CF-403E.ipt	4
FL688ZZ.ipt	6
magnet.ipt	1
Pin Header 1x8 TH Angle Pitch 2.54mm.ipt	1
SB-203040.ipt	4
SS_5GL_ACTUATOR.ipt	1
SS_5GL_BASE.ipt	1

	名前	日付
作成者	Yuta Kage	2021/08/12
確認者		
承認者		

s-assy-unit-j1

1 / 1

A2