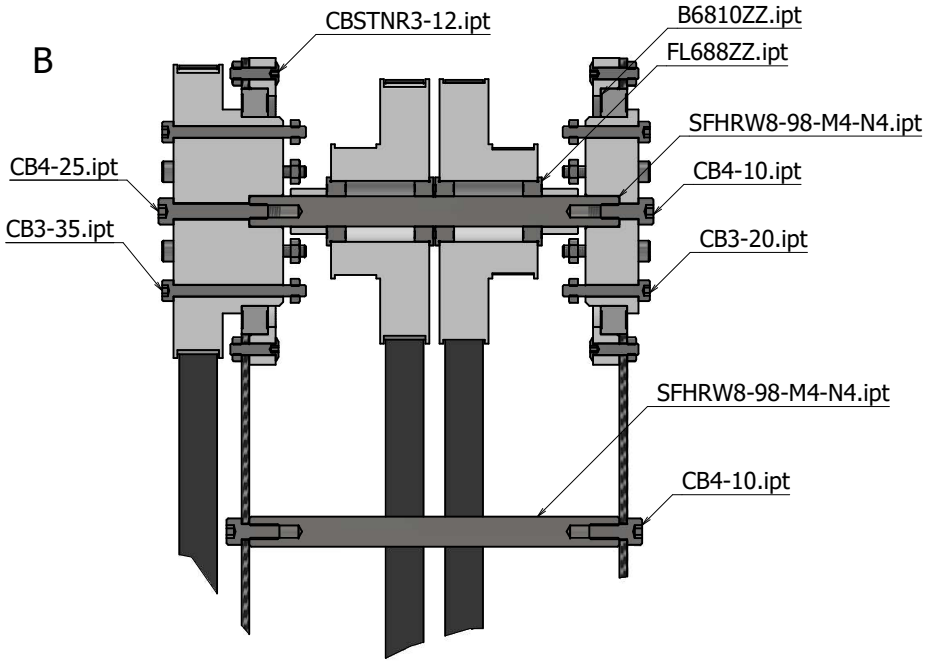

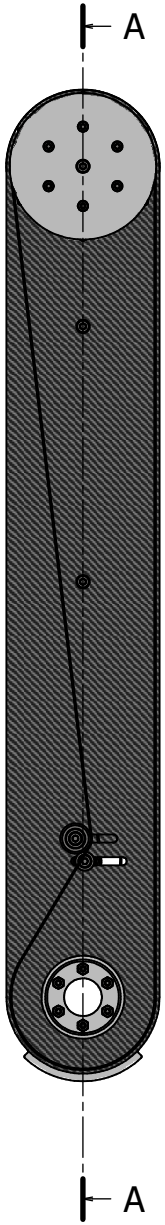

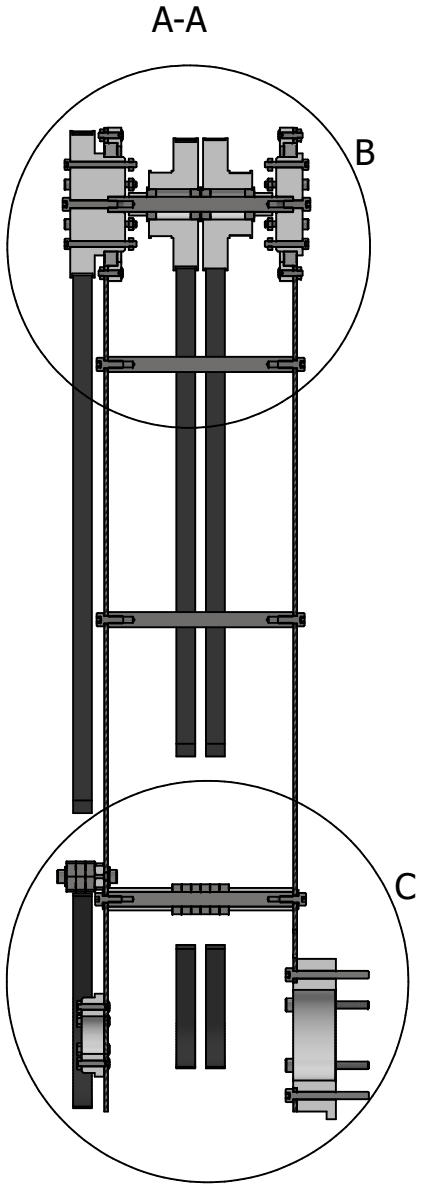

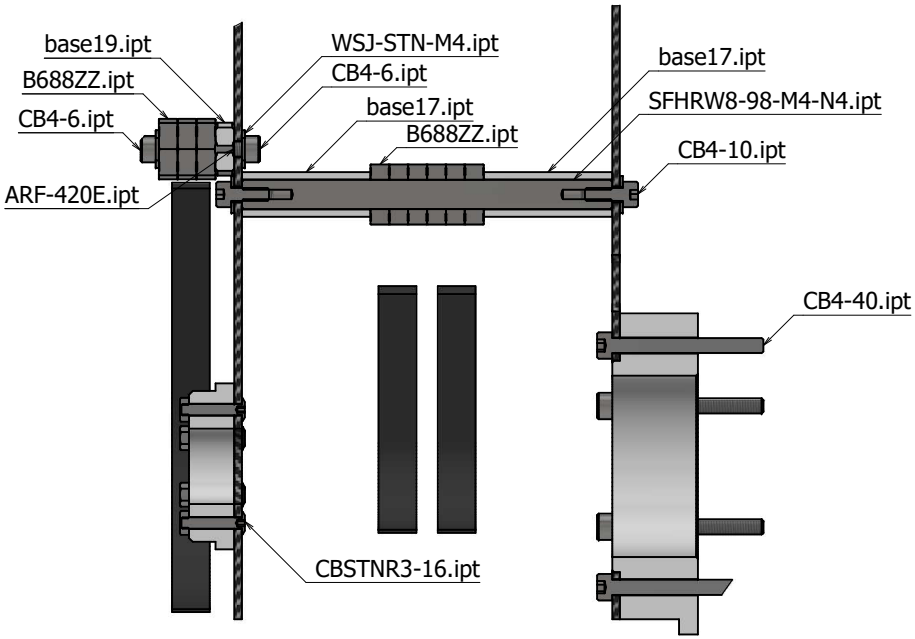

部品表

ファイル名	数量
ARF-420E.ipt	1
B688ZZ.ipt	9
B6810ZZ.ipt	2
base1.ipt	1
base2.ipt	2
base3.ipt	1
base14.ipt	1
base15.ipt	2
base17.ipt	2
base18.ipt	2
base19.ipt	1
base30.ipt	1
belt_1.ipt	1
belt_2.ipt	2
carbon_plate2.ipt	1
carbon_plate3.ipt	1
CB3-20.ipt	6
CB3-35.ipt	6
CB4-6.ipt	2
CB4-10.ipt	7
CB4-25.ipt	1
CB4-40.ipt	6
CBSTNR3-12.ipt	12
CBSTNR3-16.ipt	6
CC-0814-05.ipt	1
FL688ZZ.ipt	4
LBNR3.ipt	30
SFHRW8-98-M4-N4.ipt	4
WSJ-STN-M4.ipt	4

	名前	日付
作成者	Yuta Kage	2021/08/13
確認者		
承認者		

s-assy-link2

1 / 1

A2