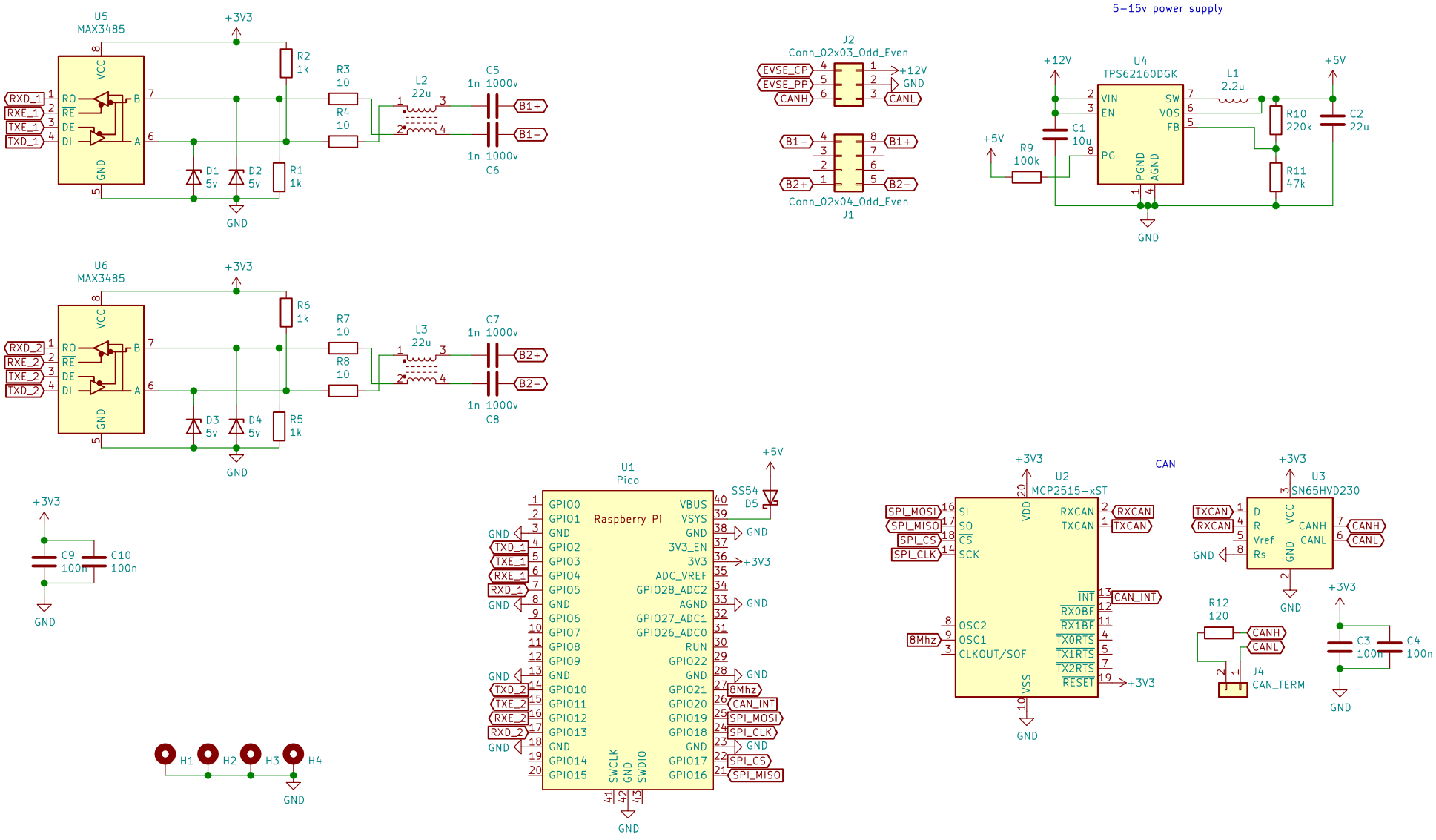
U5
MAX3485
+3V3
VCC
GND
RO
RE
DE
DI
A
B
RXD_1
RXE_1
TXE_1
TXD_1
R2
1k
R1
1k
D1
5v
D2
5v
R3
10
R4
10
L2
22u
C5
1n 1000v
C6
B1+
B1−
U6
MAX3485
RXD_2
RXE_2
TXE_2
TXD_2
R6
1k
R5
1k
D3
5v
D4
5v
R7
10
R8
10
L3
22u
C7
C8
B2+
B2−
J2
Conn_02x03_Odd_Even
EVSE_CP
EVSE_PP
CANH
+12V
CANL
J1
Conn_02x04_Odd_Even
5−15v power supply
U4
TPS62160DGK
VIN
EN
PG
SW
VOS
FB
PGND
AGND
L1
2.2u
C1
10u
R9
100k
R10
220k
R11
47k
C2
22u
C9
100n
C10
100n
U1
Pico
Raspberry Pi
VBUS
VSYS
3V3_EN
3V3
ADC_VREF
GPIO28_ADC2
GPIO27_ADC1
GPIO26_ADC0
RUN
SWCLK
SWDIO
SS54
D5
8Mhz
CAN_INT
SPI_MOSI
SPI_CLK
SPI_CS
SPI_MISO
CAN
U2
MCP2515−xST
SI
SO
CS
SCK
VDD
VSS
RXCAN
TXCAN
INT
RX0BF
RX1BF
TX0RTS
TX1RTS
TX2RTS
RESET
OSC2
OSC1
CLKOUT/SOF
U3
SN65HVD230
D
R
Vref
Rs
VCC
GND
CANH
CANL
R12
120
J4
CAN_TERM
C3
100n
C4
100n
H1
H2
H3
H4