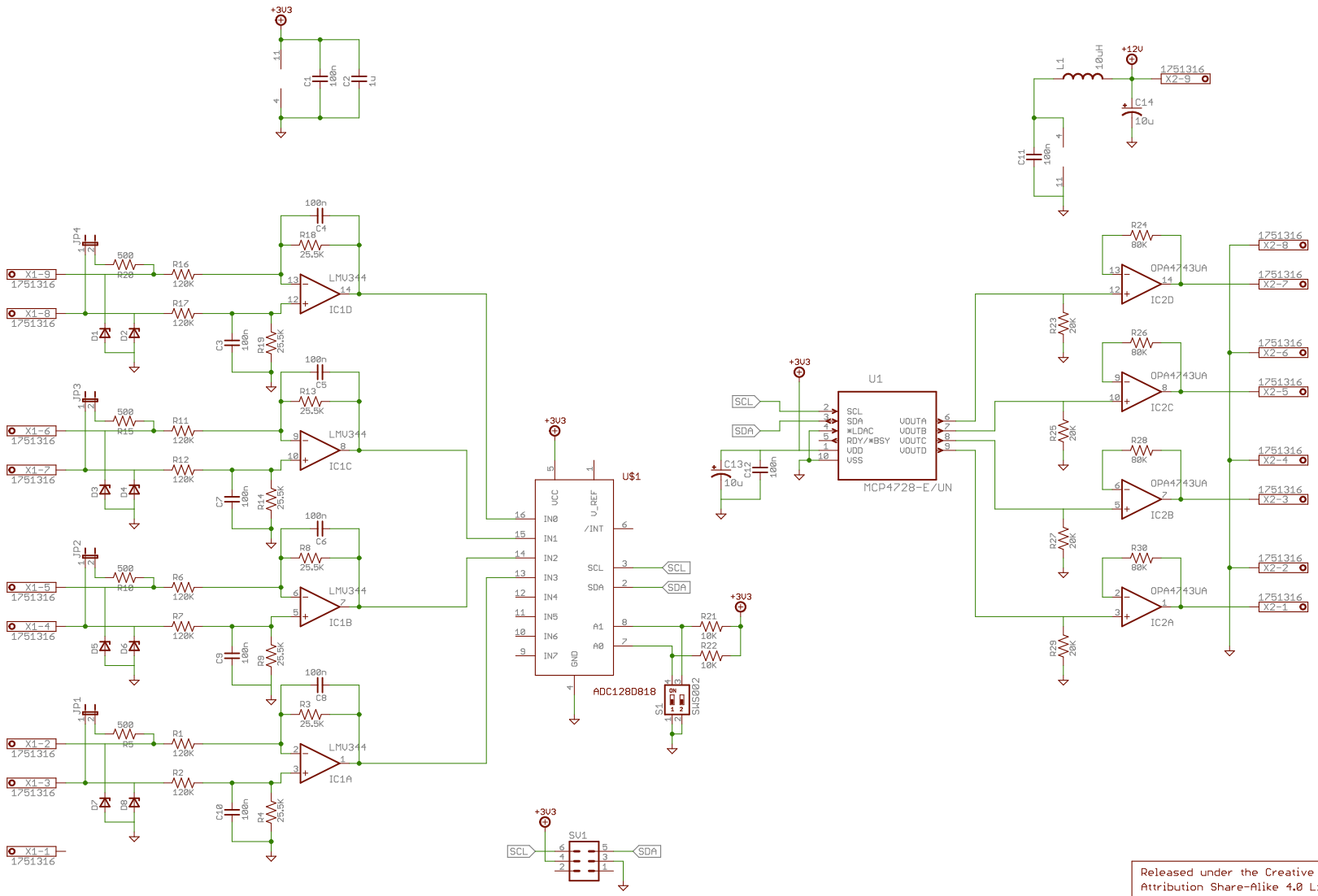

Released under the Creative Commons
Attribution Share-Alike 4.0 License
https://creativecommons.org/licenses/by-sa/4.0/

TITLE: DMB-4770-4-Analog_4-DAC

Design by:

REV:

Date: 14-10-22 23:11

Sheet: 1/1