测试说明

此处提供了三个MAC示例工程：

- 工程MAC_FREERTOS_DOUBLE测试基于FreeRTOS操作系统的双MAC功能
- 工程MAC_NO_RTOS测试无操作系统的MAC0功能
- 工程MAC_FREERTOS测试基于FreeRTOS操作系统的MAC0功能

测试组网

PC机的网口和V32F20XXX的网口接到交换机上，PC机上配置同网段的两个IP地址

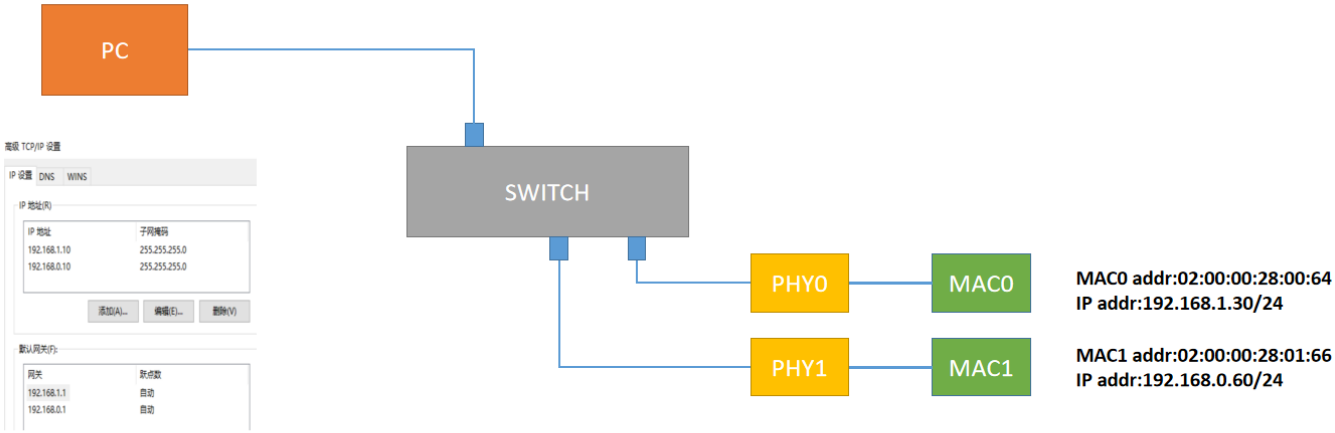

测试步骤

1 全速运行测试MAC_FREERTOS_DOUBLE/MAC_NO_RTOS/MAC_FREERTOS工程

2 使用SSCOM 发送UDP报文，远程的IP地址和UDP端口号必须和V32F20XXX的配置一致

先点击SSCOM上的连接按钮，然后点击发送按钮，可以看到原始报文被环回回来

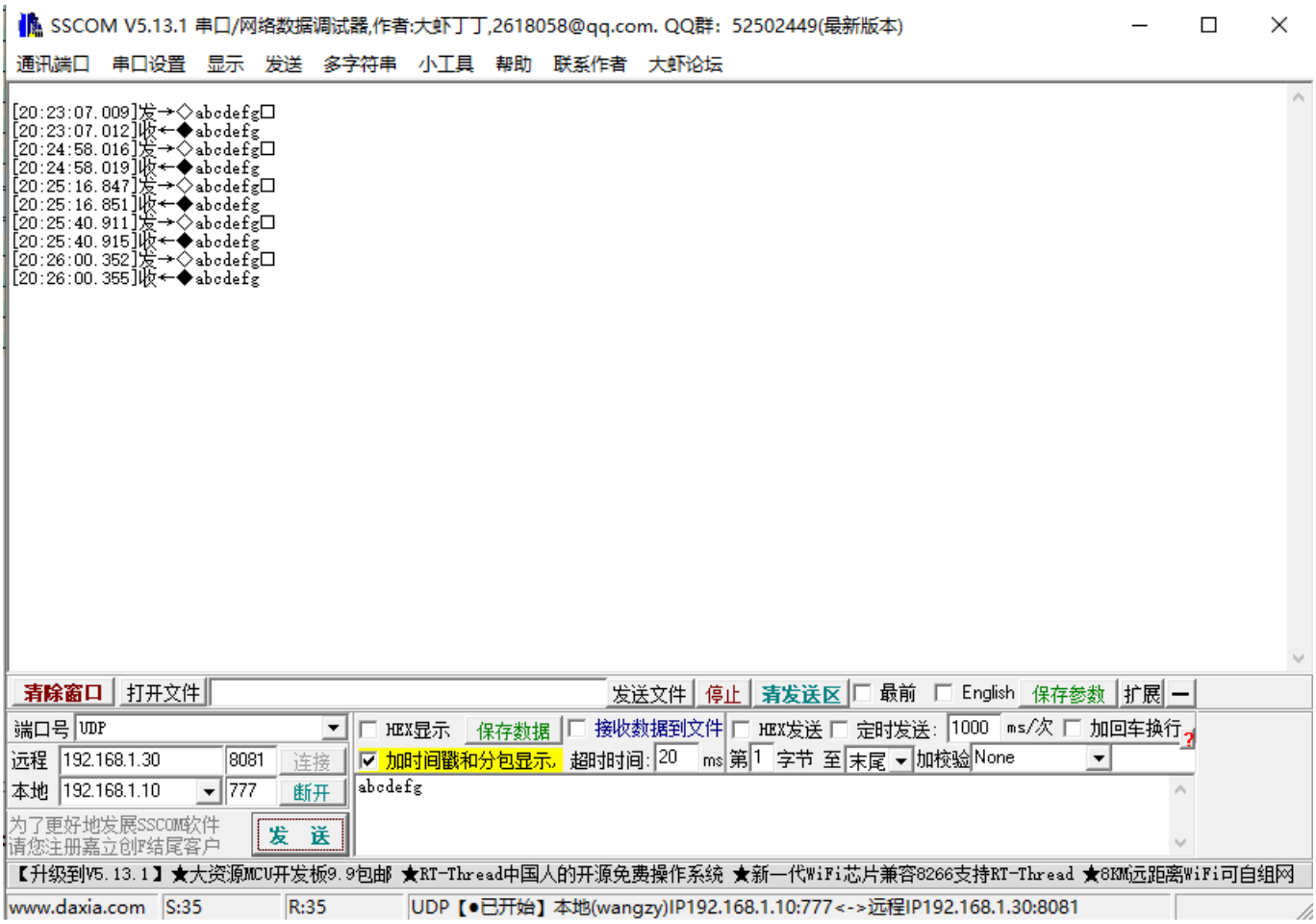

我们可以通过PC机上的wireshark抓到UDP收发过程。

No.	Time	Source	Destination	Protocol	Length	Info
4	11.239634	192.168.0.10	192.168.0.60	UDP	49	777→8081 Len=7
5	11.242647	192.168.0.60	192.168.0.10	UDP	60	8081→777 Len=7
9	15.948888	AsixElec_81:60:d2	02:00:00:28:01:66	ARP	42	Who has 192.168.0.60? Tell 192.168.0.10
24	21.783765	AsixElec_81:60:d2	Broadcast	ARP	42	Who has 192.168.1.1? Tell 192.168.1.10
25	22.457057	AsixElec_81:60:d2	Broadcast	ARP	42	Who has 192.168.1.1? Tell 192.168.1.10
26	23.449517	AsixElec_81:60:d2	Broadcast	ARP	42	Who has 192.168.1.1? Tell 192.168.1.10
27	24.949946	AsixElec_81:60:d2	Broadcast	ARP	42	Who has 192.168.0.1? Tell 192.168.0.10
28	25.945927	AsixElec_81:60:d2	Broadcast	ARP	42	Who has 192.168.0.1? Tell 192.168.0.10
29	26.958127	AsixElec_81:60:d2	Broadcast	ARP	42	Who has 192.168.0.1? Tell 192.168.0.10
30	30.680103	192.168.1.10	192.168.1.30	UDP	49	777→8081 Len=7
31	30.683057	192.168.1.30	192.168.1.10	UDP	60	8081→777 Len=7
32	34.456034	AsixElec_81:60:d2	Broadcast	ARP	42	Who has 192.168.1.1? Tell 192.168.1.10
33	35.458451	AsixElec_81:60:d2	02:00:00:28:00:64	ARP	42	Who has 192.168.1.30? Tell 192.168.1.10
34	35.458473	AsixElec_81:60:d2	Broadcast	ARP	42	Who has 192.168.1.1? Tell 192.168.1.10
35	36.454403	AsixElec_81:60:d2	02:00:00:28:00:64	ARP	42	Who has 192.168.1.30? Tell 192.168.1.10

使用SSCOM 发送TCP报文，远程的IP地址和UDP端口号必须和V32F20XXX的配置一致

先点击SSCOM上的连接按钮，然后点击发送按钮，可以看到原始报文被环回回来

No.	Time	Source	Destination	Protocol	Length	Info
8	2.938127	192.168.1.10	192.168.1.30	TCP	66	63305→8081 [SYN] Seq=0 Win=64240 Len=0 MSS=1460 WS=256 SACK_PERM=1
9	2.940876	192.168.1.30	192.168.1.10	TCP	60	8081→63305 [SYN, ACK] Seq=0 Ack=1 Win=2920 Len=0 MSS=1460
10	2.940939	192.168.1.10	192.168.1.30	TCP	54	63305→8081 [ACK] Seq=1 Ack=1 Win=64240 Len=0
16	5.925668	192.168.1.10	192.168.1.30	TCP	61	63305→8081 [PSH, ACK] Seq=1 Ack=1 Win=64240 Len=7
17	5.928610	192.168.1.30	192.168.1.10	TCP	60	8081→63305 [ACK] Seq=1 Ack=8 Win=2913 Len=0
18	5.928611	192.168.1.30	192.168.1.10	TCP	61	8081→63305 [PSH, ACK] Seq=1 Ack=8 Win=2913 Len=7
19	5.930380	192.168.1.30	192.168.1.10	TCP	60	8081→63305 [FIN, ACK] Seq=8 Ack=8 Win=2913 Len=0
20	5.930437	192.168.1.10	192.168.1.30	TCP	54	63305→8081 [ACK] Seq=8 Ack=9 Win=64233 Len=0
21	5.931480	192.168.1.10	192.168.1.30	TCP	54	63305→8081 [FIN, ACK] Seq=8 Ack=9 Win=64233 Len=0
22	5.934051	192.168.1.30	192.168.1.10	TCP	60	8081→63305 [ACK] Seq=9 Ack=9 Win=2912 Len=0

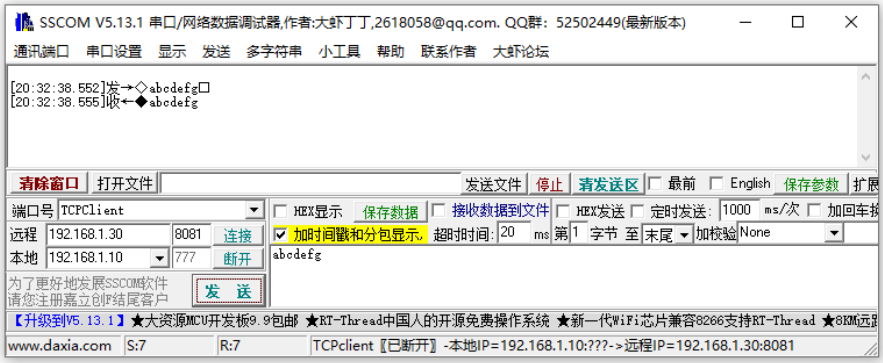

No.	Time	Source	Destination	Protocol	Length	Info
34	17.314721	192.168.0.10	192.168.0.60	TCP	66	52146→8081 [SYN] Seq=0 Win=64240 Len=0 MSS=1460 WS=256 SACK_PERM=1
35	17.317745	192.168.0.60	192.168.0.10	TCP	60	8081→52146 [SYN, ACK] Seq=0 Ack=1 Win=2920 Len=0 MSS=1460
36	17.317807	192.168.0.10	192.168.0.60	TCP	54	52146→8081 [ACK] Seq=1 Ack=1 Win=64240 Len=0
43	21.752696	192.168.0.10	192.168.0.60	TCP	61	52146→8081 [PSH, ACK] Seq=1 Ack=1 Win=64240 Len=7
44	21.755709	192.168.0.60	192.168.0.10	TCP	60	8081→52146 [ACK] Seq=1 Ack=8 Win=2913 Len=0
45	21.755709	192.168.0.60	192.168.0.10	TCP	61	8081→52146 [PSH, ACK] Seq=1 Ack=8 Win=2913 Len=7
46	21.757547	192.168.0.60	192.168.0.10	TCP	60	8081→52146 [FIN, ACK] Seq=8 Ack=8 Win=2913 Len=0
47	21.757597	192.168.0.10	192.168.0.60	TCP	54	52146→8081 [ACK] Seq=8 Ack=9 Win=64233 Len=0
48	21.758137	192.168.0.10	192.168.0.60	TCP	54	52146→8081 [FIN, ACK] Seq=8 Ack=9 Win=64233 Len=0
49	21.760632	192.168.0.60	192.168.0.10	TCP	60	8081→52146 [ACK] Seq=9 Ack=9 Win=2912 Len=0