V32F20x
V32H20x
Datasheet

Specifications are subject to change without notice.

© 2022 Vango Technologies, Inc.

This document contains information that is proprietary to Vango Technologies, Inc.

Unauthorized reproduction of this information in whole or in part is strictly prohibited.

Declaration

THIS DOCUMENTATION IS THE ORIGINAL WORK AND COPYRIGHTED PROPERTY OF VANGO ("VANGO"). REPRODUCTION IN WHOLE OR IN PART MUST OBTAIN THE WRITTEN APPROVAL OF VANGO AND GIVE CLEAR ACKNOWLEDGEMENT TO THE COPYRIGHT OWNER.

THE PURCHASED PRODUCTS, SERVICES AND FEATURES ARE STIPULATED BY THE CONTRACT MADE BETWEEN VANGO AND THE CUSTOMER. PLEASE READ THE TERMS AND CONDITIONS OF THE CONTRACT AND RELEVANT INSTRUCTIONS CAREFULLY BEFORE USING, AND FOLLOW THE INSTRUCTIONS IN THIS DOCUMENTATION STRICTLY. VANGO ASSUMES NO RESPONSIBILITY FOR THE CONSEQUENCES OF IMPROPER USE (INCLUDING BUT NOT LIMITED TO OVERVOLTAGE, OVERCLOCK, OR EXCESSIVE TEMPERATURE).

THE INFORMATION FURNISHED BY VANGO IS PROVIDED JUST AS A REFERENCE OR TYPICAL APPLICATIONS, ALL STATEMENTS, INFORMATION, AND RECOMMENDATIONS IN THIS DOCUMENT DO NOT CONSTITUTE A WARRANTY OF ANY KIND, EXPRESS OR IMPLIED. VANGO RESERVES THE RIGHT TO MAKE CHANGES IN CIRCUIT DESIGN AND/OR SPECIFICATIONS AT ANY TIME WITHOUT NOTICE. NOR FOR ANY INFRINGEMENTS OF PATENTS OR OTHER RIGHTS OF THE THIRD PARTIES WHICH MAY RESULT FROM ITS USE. NO LICENSE IS GRANTED BY IMPLICATION OR OTHERWISE UNDER ANY PATENT OR PATENT RIGHTS OF VANGO. THIRD PARTY LICENCES MAY BE REQUIRED TO IMPLEMENT THE SOLUTION/PRODUCT. CUSTOMERS SHALL BE SOLELY RESPONSIBLE TO OBTAIN ALL APPROPRIATELY REQUIRED THIRD PARTY LICENCES. VANGO SHALL NOT BE LIABLE FOR ANY LICENCE FEE OR ROYALTY DUE IN RESPECT OF ANY REQUIRED THIRD PARTY LICENCE. VANGO SHALL HAVE NO WARRANTY, INDEMNITY OR OTHER OBLIGATIONS WITH RESPECT TO MATTERS COVERED UNDER ANY REQUIRED THIRD PARTY LICENCE.

Revision History

Revision	Date	Description
1.0	12-May-2022	Initial Version
1.1	13-May-2022	Delete I2S_SCLK_IN signal;
1.2	31-May-2022	Modify signal name I2S0_SCLK/ I2S1_SCLK to I2S0_SCK/ I2S1_SCK; Add power consumption; Add module transmission speed; Only support 1 ETH for 100/ 144 pinouts(lacking RMII1_TX_EN)

Vangotech

Contents

Declaration 2
Revision History 3
Contents 4
Figures 6
Tables 7
1 About This Documentation 8
1.1 Intended Audience 8
1.2 Purpose 9
2 Overview 9
2.1 Introduction 9
2.2 Features 9
2.3 Block Diagram 21
2.4 Clock Diagram 22
2.5 Power Supply 24
3 Functional overview 25
3.1 Arm® Cortex®-M33 core with TrustZone® and FPU (CORE0) 25
3.2 Embedded Flash memory (FLASH) 25
3.3 Embedded SRAM (SRAM) 25
3.4 Multi-AHB bus matrix 25
3.5 DMA controller (DMA) 26
3.6 Basic Direct Memory Access Controller (BDMA) 26
3.7 Watchdog Timer (WDT) 26
3.8 General-purpose inputs/outputs (GPIO) 26
3.9 Cyclic redundancy check calculation unit (CRC) 27
3.10 OSPI interface (OSPI) 27
3.11 Analog-to-digital converter (ADC) 27
3.12 Digital to analog converter (DAC) 27
3.13 Comparators (COMP) 28
3.14 Random Number Generator (RNG) 28
3.15 External ADC Interface Controller (EADC) 28
3.16 Ethernet (ETH) 28
3.17 Enhanced Timer (ETMR) 28
3.18 General Timer (GTMR) 29
3.19 Basic Timer Controller (BTMR, LPBTMR) 29
3.20 Basic PWM Controller (BPWM) 29
3.21 Universal serial high-speed (USB_HS) 30
3.22 Universal serial bus full-speed (USB_FS) 30
3.23 Digital Camera Interface (DCMI) 30
3.24 Secure Digital Input and Output (SDIO) 30
3.25 Serial Peripheral Interface (SPI) 30
3.26 Inter-integrated Circuit Interface (I2C) 31
3.27 Universal Asynchronous Receiver Transmitter (UART) 31
3.28 ISO7816 Controller (ISO7816) 32
3.29 Basic Direct Memory Access Controller (BDMA) 32
3.30 Basic Serial Peripheral Interface (BSPI) 32
3.31 UART32K Controller (UART32K) 32

3.32 HFM Coprocessor (HFM) 33
3.33 Software Define VGIO (VGIO) 33
4 Electrical Characteristics 34
4.1 Absolute Maximum Ratings 34
4.2 Recommended Operation Condition 34
4.3 ESD level 35
4.4 DC Specification 35
4.5 Clock 36
4.5.1 32K XOL 36
4.5.2 XOH 36
4.5.3 32K RC 37
4.5.4 48M RC 37
4.5.5 PLL0 Specifications 38
4.5.6 PLL1 Specifications 38
4.6 ADC Characteristics 39
4.7 DAC Characteristics 40
4.8 CMP Characteristics 41
4.9 USB Full Speed PHY 44
4.10 USB High Speed PHY 46
4.11 Power Consumption 49
4.12 Module Speed Rate 51
5 Pinouts and pin description 52
5.1 LQFP-176 Characteristics 52
5.2 LQFP-144 Characteristics 53
5.3 LQFP-100 Characteristics 54
5.4 LQFP-64 Characteristics 55
5.5 V32F20x/V32H20x pin definitions 56
6 Package Thermal Characteristics 98
7 Package Dimension 99
8 Reflow Profile 103
9 Part Marking 105
10 Ordering information 106

Figures

Figure 2-1 V32F20X/V32H20x Block Diagram 21
Figure 2-2 System Clock Source Distribution Diagram 22
Figure 2-3 System Clock Genaration Distribution Diagram 23
Figure 2-4 Power supply overview 24
Figure 4-1 V_{com} and V_{diff} graph 43
Figure 4-2 V_{hy} graph 43
Figure 4-3 T_{dly} graph 44
Figure 5-1 LQFP-176 Assignments 52
Figure 5-2 LQFP-144 Assignments 53
Figure 5-3 LQFP-100 Assignments 54
Figure 5-4 LQFP-64 Assignments 55
Figure 7-1 176-PIN Package Dimension 99
Figure 7-2 144-PIN Package Dimension 100
Figure 7-3 100-PIN Package Dimension 101
Figure 7-4 64-PIN Package Dimension 102
Figure 8-1 Typical Lead-free Reflow Profile 103
Figure 8-2 Measuring the Reflow Soldering Process 104
Figure 9-1 V32F207ZGT61A Marking 105
Figure 10-1 Ordering information 106

Vangotech

Tables

Table 2-1 V32F205x/V32H205x features and peripheral counts 13
Table 2-2 V32F207x/V32H207x features and peripheral counts 15
Table 2-3 V32F208x/V32H208x features and peripheral counts 17
Table 2-4 V32F209x/V32H209x features and peripheral counts 19
Table 2-5 AHBx and APBx Max Frequency 23
Table 4-1 Absolute Maximum Ratings 34
Table 4-2 Current characteristics 34
Table 4-3 Thermal characteristics 34
Table 4-4 Recommended operation conditions 34
Table 4-5 ESD/LU immunity level 35
Table 4-6 DC characteristics table of 3.3V I/O 35
Table 4-7 32K XOL Characteristics 36
Table 4-8 12M XOH Characteristics 36
Table 4-9 32K RC Characteristics 37
Table 4-10 RCH Characteristics Table 37
Table 4-11 PLL0 specifications table 38
Table 4-12 PLL1 specifications table 38
Table 4-13 ADC Characteristics 39
Table 4-14 DAC Characteristics 40
Table 4-15 CMP Characteristics 41
Table 4-16 Operating Conditions 44
Table 4-17 DC Characteristics of DP/DM 45
Table 4-18 Full-Speed Source Electrical Characteristics 45
Table 4-19 Low-Speed Source Electrical Characteristics 46
Table 4-20 Accepted Cable Characteristics 46
Table 4-21 Operating Conditions 46
Table 4-22 DC Characteristics of DP/DM 47
Table 4-23 High-Speed Source Electrical Characteristics 48
Table 4-24 Full-Speed Source Electrical Characteristics 48
Table 4-25 Low-Speed Source Electrical Characteristics 48
Table 4-26 Accepted Cable Characteristics 49
Table 4-27 Power consumption of the system in 3-core mode 49
Table 4-28 Power consumption of the system in 3-core mode 49
Table 4-29 Overall power consumption for different number of cores 50
Table 4-30 Power consumption of different RCH frequency division in dual core mode 50
Table 4-31 Digital power consumption under sleep and reset, analog power consumption 51
Table 4-32 Module Speed Rate 51
Table 5-1. Pin Characteristics 56
Table 6-1. V32F20X Thermal Resistance Characteristics 98
Table 8-1. Lead-free Reflow Profile Conditions 103
Table 9-1. Marking Definitions 105

1 About This Documentation

1.1 Intended Audience

The document is intended for:

- Design and maintenance personnel for electronics
- Sales personnel for electronic parts and components

Vangotech

1.2 Purpose

This document provides an overall description of the VANGO's V32F20X/ V32H20X application processor, which describes the overview, features, logical structures, functions and register listings of each module. The document also describes the interface timings and related parameters in diagrams. In addition, the document describes the pins, pin usages, performance parameters, and package dimension of V32F20X/ V32H20X in detail.

2 Overview

2.1 Introduction

V32F20X/ V32H20x is an ARM Cortex-M33 microcontroller for embedded applications, which can be equipped with an ARM Cortex-M0 coprocessor. These devices include up to 1024+80 KB of on-chip SRAM, up to 2048+256 KB on-chip flash, high-speed and full-speed USB host and device interface with crystal-less operation for full-speed, two Ethernet 10/100 MACs with RMII, two CAN interfaces, two SD/MMC/SDIO interfaces.

The Arm Cortex M33 provides a security foundation, offering isolation to protect valuable IP and data with TrustZone technology. It simplifies the design and software development of digital signal control systems with the integrated digital signal processing (DSP) instructions. To support security requirements, the V32F20X also offers support for RNG, SHA, HMAC, AES, SM2, SM3, SM4, CRC, ECC, RSA, UUID, dynamic encrypt and decrypt, debug authentication.

2.2 Features

The Key feature is as follows:

- Three types of Architecture
  - CM33 (V32F205x/ V32H205x/ V32F207x/ V32H207x)
  - Dual CM33 (V32F208x/ V32H208x)
  - Dual CM33 + CM0 (V32F209x/ V32H209x)
- ARM Cortex-M33 core (Core0)
  - Running at a frequency

    V32F20x up to 180 MHz (Typical: 144 MHz/ 180MHz)

V32H20x up to 220 MHz (Typical: 144 MHz/ 180MHz/ 192MHz/ 220MHz)

– Secure extension, TrustZone supported.

– Floating Point Unit (FPU) supported.

– Memory Protection Unit (MPU) supported.

– DSP Instruction supported.

– ARM Cortex M33 build-in Nested Vectored Interrupt Controller (NVIC).

– Non-Mask-able Interrupt (NMI) input with a selection of sources.

– System tick timer.

– Crypto co-processor is provided to enable hardware acceleration for various functions required for certain asymmetric cryptographic algorithms, such as, Elliptic Curve Cryptography (ECC), RSA etc.

• ARM Cortex-M33 core (Core 1)

– Running at a frequency as Core 0

– The Configuration of this instance does not include MPU, FPU, DSP, ETM and TrustZone

– Sys-Tick and WIC supported

• ARM Cortex-M0 core

– Running at a frequency of up to 64 MHz.

– Debug logic included, 4 breakpoints and comparators supported.

– Up to 2 Debug Watch Points supported.

– Single Cycle Multiply Logic.

– Sys-Tick and WIC supported.

• On-chip Memory

– Up to 2MB (support 2 bank) + 256KB on-chip flash, both with cache.

– Up to 1024KB total contiguous SRAM dedicate for CM33 on System Bus. Another 80 KB sharable for CM33 and CM0. All SRAM protect with ECC (1-bit error correct/ 2-bit error detect)

– All SRAM with ECC protection.

– 64KB ROM with boot code in CM33.

• External Interface

– Up to Flexcomm (I2C/ UART/ SPI) x 14

– Up to UART x 6

– Up to Basic SPI x 6

– Up to OSPI (QSPI) x 2

– Up to SDIO x 2

- Up to I2S x 2
- Up to I2C x 1
- Up to CAN 2.0 x 2
- Up to DCMI x 1
- USB 2.0 full-speed host/ device controller with on-chip PHY.
- USB 2.0 high-speed host/device controller with on-chip PHY.
- Up to ISO7816 x 4
- Up to Ethernet 10/100 MAC with RMII x 2
- Support RTC

• Other Digital Peripherals:

- Up to DMA controller with 8 channels x 2
- Up to 141 General Purpose IOs.
- Up to 32 GPIOs can be selected as Pin interrupts.
- Support CRC16/ CRC32.
- FFT with 128 point

• Security features:

- ARM TrustZone enabled.
- AES-128/ 196/ 256, SM4 encryption/ decryption engine.
- Secure Hash Algorithm (SHA1/ SHA256/ SM3) module supports secure boot.
- Random Number Generator.

• Timers:

- Up to BTMR x 8
- Up to GTMR x 4
- Up to ETMR x 2
- Up to LPBTMR x 2
- UP to Watchdog Timer x 3

• Analog Peripherals

- 12-bit x 16 Channels SAR-ADC x 2
- 12-bit DAC x 2
- 8 Channels EADC x 1
- COMP x 2 + RTC_COMP x 2

• WAVER + FFT

- Support IAP/ ISP
- Support crystal free applications
- On chip network for IO pad functional re-assignment.

Vangotech

Table 2-1 V32F205x/V32H205x features and peripheral counts

Peripherals		V32F205Rx/V32H205Rx			V32F205Vx/V32H205Vx			V32F205Zx/V32H205Zx		
Flash memory in Kbytes		256	512	1024	256	512	1536	768	1024	1536
SRAM memory in Kbytes		256+64	256+128	256+256+64	256+64	256+128	256+256+64	256+64	256+128	256+256+64
OSPI/QSPI		0			0			2		
Ethernet		0			0			0		
Timers	General-purpose	4			4			4		
	Advanced-control	2			2			2		
	Basic	8			8			8		
	IWDG/ WWDG	3			3			3		
	Lowpower Basic	2			2			2		
RTC		1			1			1		
Random number generator		1			1			1		
Comm. interfaces	I2S	2			2			2		
	Flexcomm (SPI/I2C/UART)	6			7			12		
	USB OTG FS	1			1			1		
	USB OTG HS	1			1			1		
	CAN	2			2			2		
	UART	1			4			6		
	Basic SPI	2			3			5		

	I2C	0	0	0
Camera interface		0	0	0
GPIOs		50	81	113
SDIO		1	1	1
12-bit ADC		2	2	2
Number of channels		32	32	32
12-bit DAC		YES	YES	YES
Number of channels		2	2	2
Maximum CPU frequency		180/220 MHz		
Operating voltage		2.7 V to 3.6 V		
Operating temperatures		Ambient temperatures: –40 to +105 °C		
		Junction temperature: –40 to + 125 °C		
Package		LQFP64	LQFP100	LQFP144

Vangotech

Table 2-2 V32F207x/V32H207x features and peripheral counts

Peripherals		V32F207Vx/V32H207Vx				V32F207Zx/V32H207Zx				V32F207Ix/V32H207Ix			
Flash memory in Kbytes		256	512	768	1024	256	512	768	1024	256	512	768	1024
SRAM memory in Kbytes		256+64			256+256+128	256+128	256+256	256+64	256+256+128	256+128	256+256		256+256+128
OSPI/QSPI		0				2				2			
Ethernet		1				1				2			
Timers	General-purpose	4				4				4			
	Advanced-control	2				2				2			
	Basic	8				8				8			
	IWDG/ WWDG	3				3				3			
	Lowpower Basic	2				2				2			
RTC		1				1				1			
Random number generator		1				1				1			
Comm. interfaces	I2S	2				2				2			
	Flexcomm (SPI/I2C/UART)	7				12				14			
	USB OTG FS	1				1				1			
	USB OTG HS	1				1				1			
	CAN	2				2				2			
	UART	4				6				6			
	Basic SPI	3				5				6			

	I2C	0	0	1
Camera interface		1	1	1
GPIOs		81	113	139
SDIO		1	1	2
12-bit ADC		2	2	2
Number of channels		32	32	32
12-bit DAC		YES	YES	YES
Number of channels		2	2	2
Maximum CPU frequency		180/220 MHz		
Operating voltage		2.7 V to 3.6 V		
Operating temperatures		Ambient temperatures: –40 to +105 °C		
		Junction temperature: –40 to + 125 °C		
Package		LQFP100	LQFP144	LQFP176/ UFBGA176

Vangotech

Table 2-3 V32F208x/V32H208x features and peripheral counts

Peripherals		V32F208Vx/V32H208Vx		V32F208Zx/V32H208Zx		V32F208Ix/V32H208Ix	
Flash memory in Kbytes		1024	2048	1024	2048	1024	2048
SRAM memory in Kbytes		256*2	256*4	256*2	256*4	256*2	256*4
OSPI/QSPI		0		2		2	
Ethernet		1		1		2	
Timers	General-purpose	4		4		4	
	Advanced-control	2		2		2	
	Basic	8		8		8	
	IWDG/ WWDG	3		3		3	
	Lowpower Basic	2		2		2	
RTC		1		1		1	
Random number generator		1		1		1	
Comm. interfaces	I2S	2		2		2	
	Flexcomm (SPI/I2C/UART)	7		12		14	
	USB OTG FS	1		1		1	
	USB OTG HS	1		1		1	
	CAN	2		2		2	
	UART	4		6		6	
	Basic SPI	3		5		6	

	I2C	0	0	1
Camera interface		1	1	1
GPIOs		81	113	139
SDIO		1	1	2
12-bit ADC		2	2	2
Number of channels		32	32	32
12-bit DAC		YES	YES	YES
Number of channels		2	2	2
Maximum CPU frequency		180/220 MHz		
Operating voltage		2.7 V to 3.6 V		
Operating temperatures		Ambient temperatures: –40 to +105 °C		
		Junction temperature: –40 to + 125 °C		
Package		LQFP100	LQFP144	LQFP176/ UFBGA176

Vangotech

Table 2-4 V32F209x/V32H209x features and peripheral counts

Peripherals		V32F209Vx/V32H209Vx		V32F209Zx/V32H209Zx		V32F209Ix/V32H209Ix	
Flash memory in Kbytes		1024+256	2048+256	1024+256	2048+256	1536+256	2048+256
SRAM memory in Kbytes		256*3 + 64	256*4 + 64	256*3 + 64	256*4 +64	256*3 + 64	256*4 +64
OSPI/QSPI		0		2		2	
Ethernet		1		1		2	
Timers	General-purpose	4		4		4	
	Advanced-control	2		2		2	
	Basic	8		8		8	
	IWDG/WWDG	3		3		3	
	Lowpower Basic	2		2		2	
RTC		1		1		1	
Random number generator		1		1		1	
Comm. interfaces	I2S	2		2		2	
	Flexcomm (SPI/I2C/UART)	7		12		14	
	USB OTG FS	1		1		1	
	USB OTG HS	1		1		1	
	CAN	2		2		2	
	UART	4		6		6	
	Basic SPI	3		5		6	

	I2C	0	0	1
Camera interface		1	1	1
GPIOs		81	113	139
SDIO		1	1	2
12-bit ADC		2	2	2
Number of channels		32	32	32
12-bit DAC		YES	YES	YES
Number of channels		2	2	2
Maximum CPU frequency		180/220 MHz		
Operating voltage		2.7 V to 3.6 V		
Operating temperatures		Ambient temperatures: –40 to +105 °C		
		Junction temperature: –40 to + 125 °C		
Package		LQFP100	LQFP144	LQFP176/ UFBGA176

Vangotech

2.3 Block Diagram

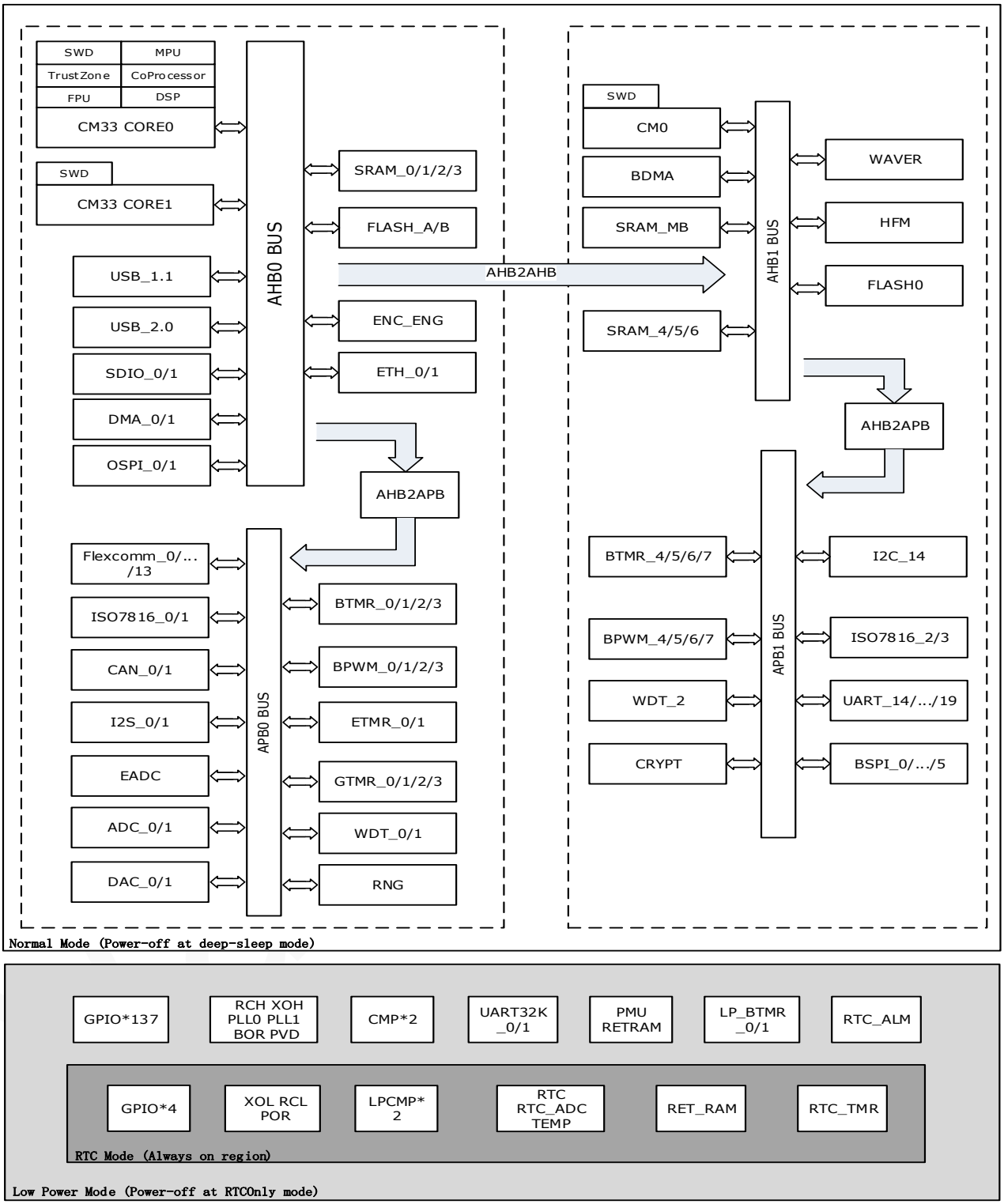

Figure 2-1 V32F20X/V32H20x Block Diagram

2.4 Clock Diagram

Provides a wide choice of clock generators:

- RCH (high-speed internal oscillator) clock: 48 MHz
- XOH (high-speed external oscillator) clock: 12 MHz
- XOL (low-speed external oscillator) clock: 32 kHz
- RCL (low-speed internal oscillator) clock: 32 kHz

The Clock generator offers a high flexibility for the application to select the appropriate clock for CPU and peripherals, in particular for peripherals that require a specific clock such as USB_FS, USB_HS, SPI, I2S and SDIO.

To optimize the power consumption, each clock source can be switched ON or OFF independently.

The Clock generator provides up to 2 PLLs; each of them can be configured with integer or fractional ratios.

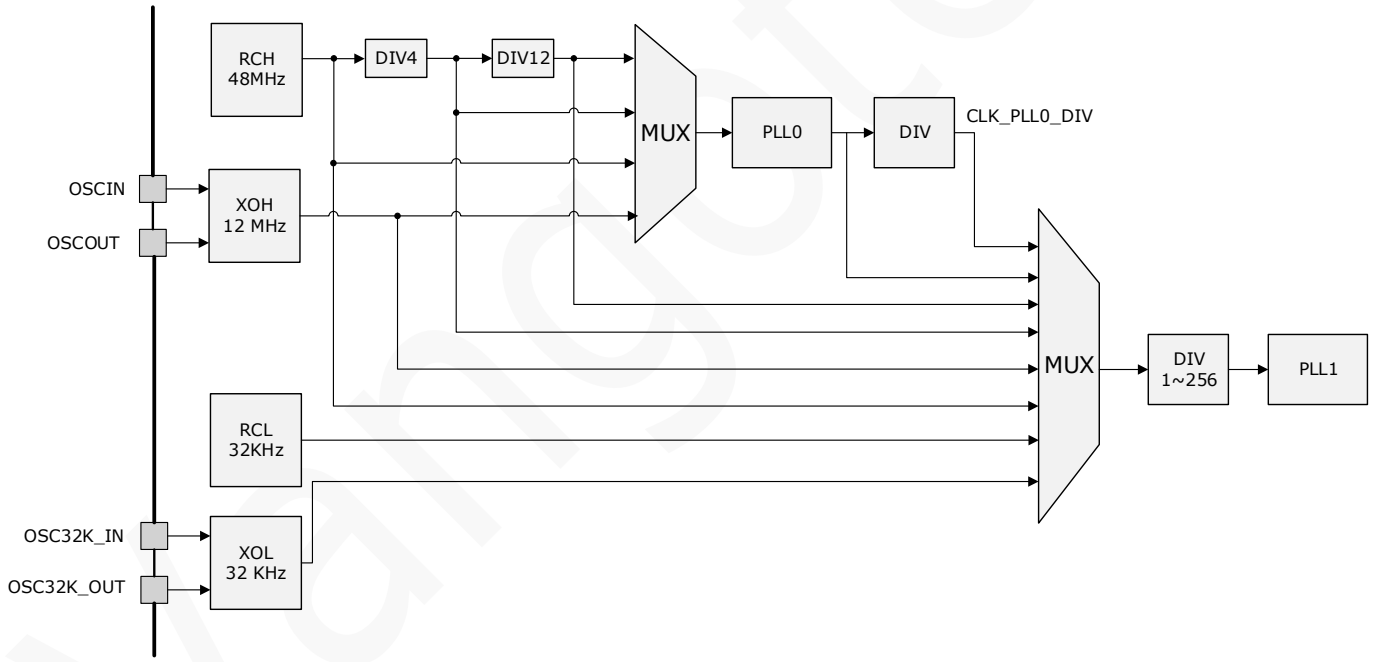

Figure 2-2 System Clock Source Distribution Diagram

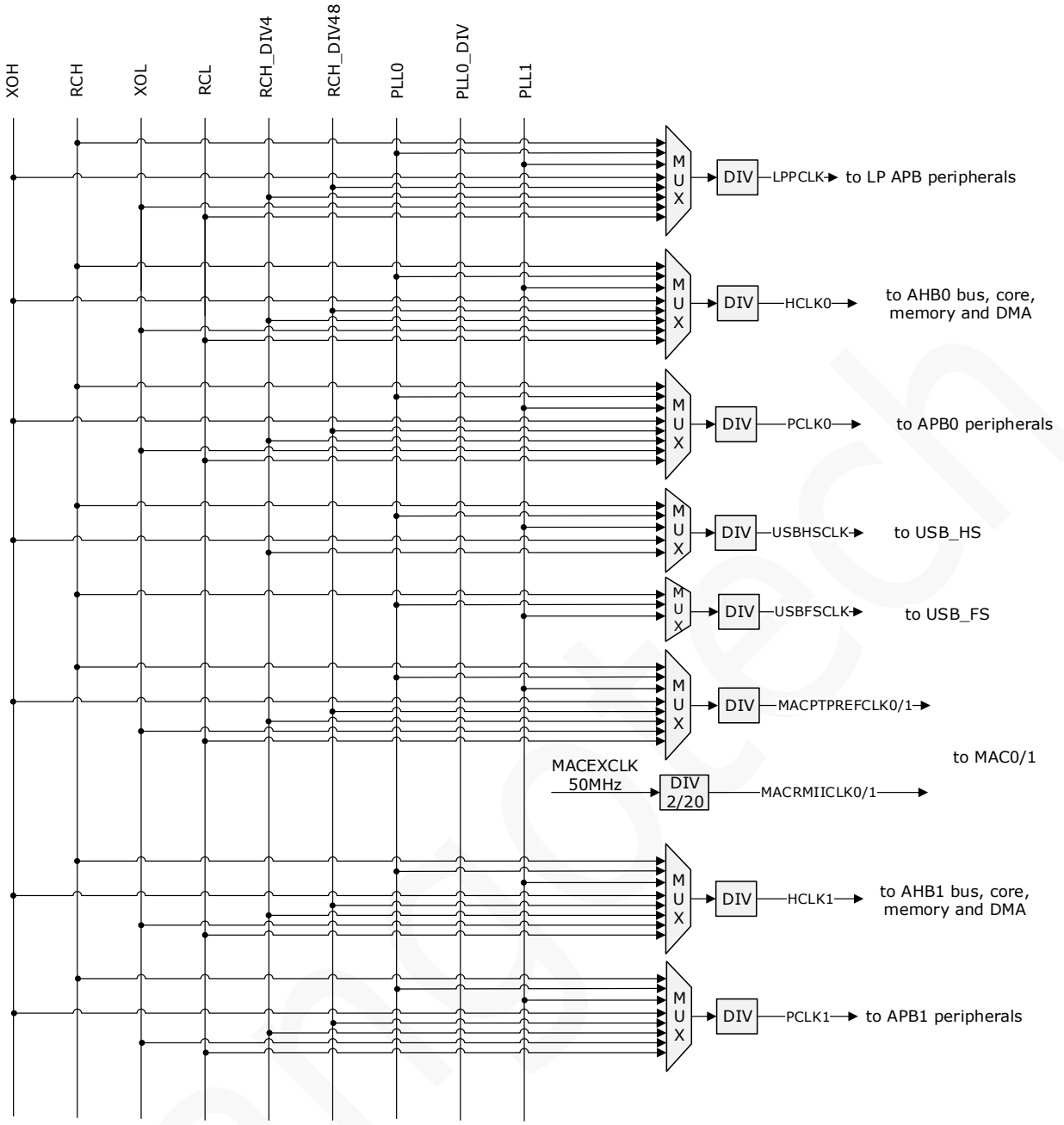

Figure 2-3 System Clock Genaration Distribution Diagram

Table 2-5 AHBx and APBx Max Frequency

Clock Source	Max Frequency	Unit
AHB0	180/220	MHz
APB0	64	MHz
AHB1	64	MHz
APB1	24	MHz

2.5 Power Supply

The device requires a 2.3-to-3.6 V operating voltage supply (VDD). An embedded linear voltage regulator is used to supply the internal 1.1 V digital power. Only single power supply is supported. V32F20x/ V32H20x can enter the ultra-low power consumption mode by entering the RTCOnly mode, at this time, most modules enter the power down state except RTC module.

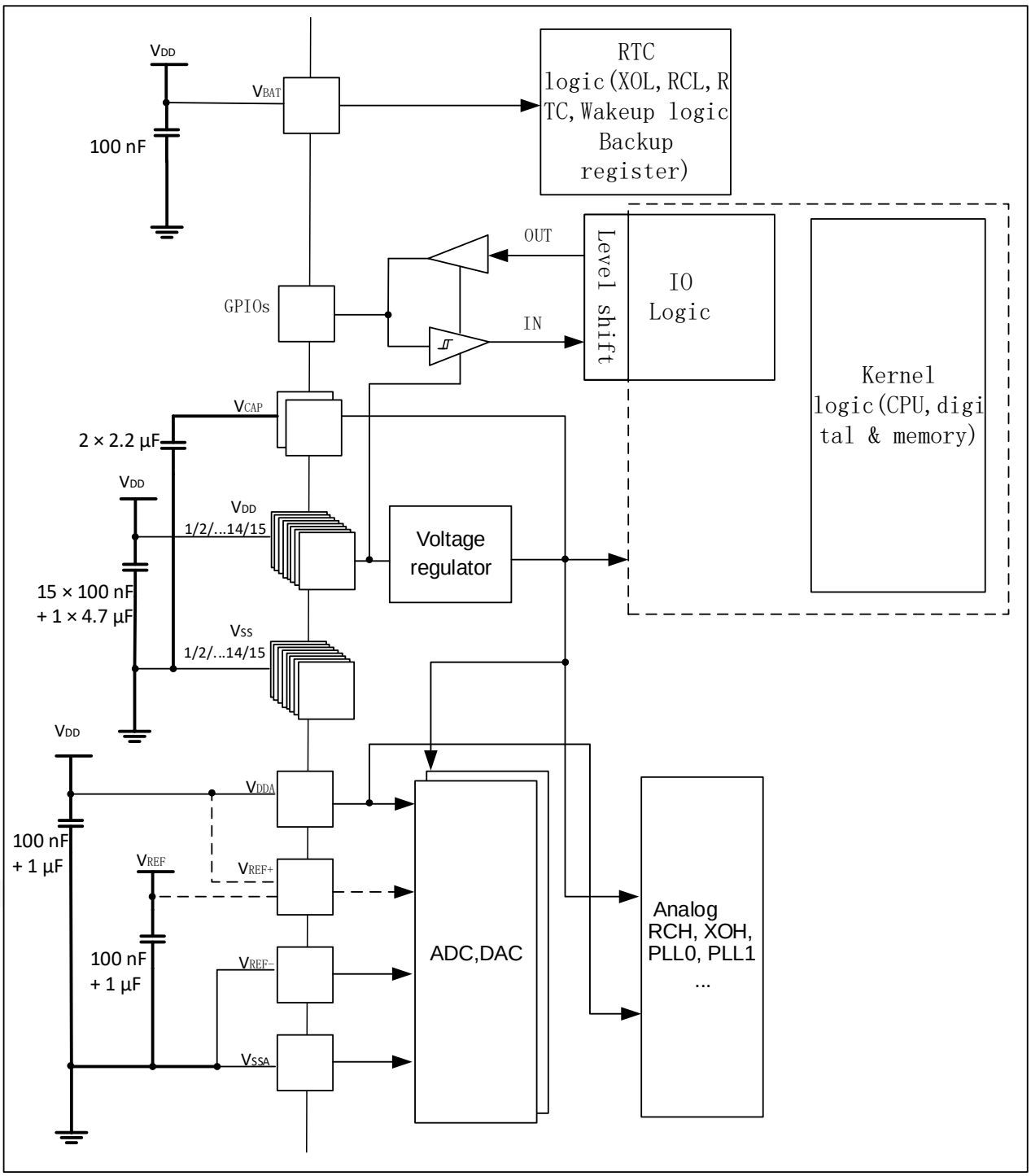

Figure 2-4 Power supply overview

3 Functional overview

3.1 Arm® Cortex®-M33 core with TrustZone® and FPU (CORE0)

The Cortex®-M33 with TrustZone and FPU is a highly energy efficient processor designed for microcontrollers and deeply embedded applications, especially those requiring efficient security.

The Cortex®-M33 processor delivers a high computational performance with low-power consumption and an advanced response to interrupts. it features:

The processor supports a set of DSP instructions that allows an efficient signal processing and a complex algorithm execution.

3.2 Embedded Flash memory (FLASH)

The STM32F20x devices embed 3 Flash memories available for storing programs and data.

– Up to 2MB (support 2 bank) + 256KB on-chip flash, both with cache.

3.3 Embedded SRAM (SRAM)

V32F20x/ V32H20x products embed:

Up to 1024KB total contiguous SRAM dedicate for CM33 on System Bus. Another 80 KB sharable for CM33 and CM0. All SRAM protect with ECC (1-bit error correct/ 2-bit error detect), and 64KB ROM with boot code in CM33.

3.4 Multi-AHB bus matrix

The 32-bit multi-AHB bus matrix interconnects all the masters (CPU, DMAs, Ethernet, USB HS) and the slaves (Flash memory, SRAM, OSPI, AHB and APB peripherals) and ensures a seamless and efficient operation even when several high-speed peripherals work simultaneously

3.5 DMA controller (DMA)

The devices feature two general-purpose dual-port DMAs (DMA0 and DMA1) with 8 streams each. They are able to manage memory-to-memory, peripheral-to-memory and memory-to-peripheral transfers. They share some centralized FIFOs for APB/AHB peripherals, support burst transfer and are designed to provide the maximum peripheral bandwidth (AHB/APB).

The two DMA controllers support circular buffer management, so that no specific code is needed when the controller reaches the end of the buffer. The two DMA controllers also have a double buffering feature, which automates the use and switching of two memory buffers without requiring any special code.

Each stream is connected to dedicated hardware DMA requests, with support for software trigger on each stream. Configuration is made by software and transfer sizes between source and destination are independent.

3.6 Basic Direct Memory Access Controller (BDMA)

The BDMA controller is used to transfer data from memory to memory or transfer data from memory to IO or from IO to memory. There are total 4 channels integrated in V32F20x/ V32H20x and each channel's priority is round-robin.

3.7 Watchdog Timer (WDT)

The WDT offer a combination of high safety level, timing accuracy and flexibility of use. The WDT (Independent and Window) serve to detect and resolve malfunctions due to software failure, and to trigger system reset or an interrupt (window watchdog only) when the counter reaches a given timeout value.

3.8 General-purpose inputs/outputs (GPIO)

Each of the GPIO pins can be configured by software as output (push-pull or open-drain), as input (with or without pull-up or pull-down) or as peripheral alternate function. Most of the GPIO pins are shared with digital or analog alternate functions.

After reset, all GPIOs are in Analog mode to reduce power consumption.

The I/Os alternate function configuration can be locked if needed following a specific sequence in order to avoid spurious writing to the I/Os registers.

3.9 Cyclic redundancy check calculation unit (CRC)

The CRC (cyclic redundancy check) calculation unit is used to get a CRC code using a configurable generator with polynomial value and size.

Among other applications, the CRC-based techniques are used to verify data transmission or storage integrity. In the scope of the EN/IEC 60335-1 standard, they offer a mean to verify the Flash memory integrity.

The CRC calculation unit helps to compute a signature of the software during runtime, which can be ulteriorly compared with a reference signature generated at link-time and which can be stored at a given memory location.

3.10 OSPI interface (OSPI)

OSPI is a programmable Synchronous Serial Interface peripheral.

The host processor accesses data, control, and status information on the OSPI through the AHB interface. The OSPI may also interface with a DMA Controller using an optional set of DMA signals, which can be selected during configuration.

3.11 Analog-to-digital converter (ADC)

The 12-bit ADC is a successive approximation analog-to-digital converter. A/D conversion of the various channels can be perform in single, continuous, scan or discontinuous mode. The result of the ADC is stored in a left-aligned or right-aligned 16-bit data register.

The analog watchdog feature allows the application to detect if the input voltage goes outside the user-defined high or low thresholds.

3.12 Digital to analog converter (DAC)

The DAC module is a 12-bit, voltage output digital-to-analog converter. The DAC may be used in

conjunction with the DMA controller. In 12-bit mode, the data could be left- or right-aligned. The DAC has two output channels, each with its own converter. In dual DAC channel mode, conversions could be done independently or simultaneously when both channels are grouped together for synchronous update operation. An input reference pin V_{REF+} is available for better resolution.

3.13 Comparators (COMP)

The device can compare two different set of voltages at the same time. User can control speed and power of both the comparators. It can be only turned on when needed by using trigger enable signal, and can be a wake up source in deep-sleep. All comparators can generate interrupt on the greater or less than values.

3.14 Random Number Generator (RNG)

The RNG enables generation and collection of truly random bit stream from digital logics. The typical usage of RNG is key generation with seeding approved deterministic random numbers.

3.15 External ADC Interface Controller (EADC)

The External ADC Interface Controller is a dedicated application function interface used for capturing the 8 channels of external DSM ADC, converting from serial to parallel for further analysis.

3.16 Ethernet (ETH)

The Ethernet peripheral enables the V32F20x/ V32H20x to transmit and receive data over Ethernet in compliance with the IEEE 802.3-2002 standard.

The Ethernet provides a configurable, flexible peripheral to meet the needs of various applications and customers. It supports the reduced media independent interface (RMII). It can be used in number of applications such as switches, network interface cards, etc.

3.17 Enhanced Timer (ETMR)

The enhanced timer consist of a 16-bit auto-reload counter driven by a programmable prescaler.

It may be used for a variety of purpose, including measuring the pulse lengths of input signals (input

capture) or generating output waveform (output compare, PWM, complementary PWM with dead-time insertion).

Pulse length and waveform periods can be modulated from a few microseconds to several milliseconds using the timer prescaler and the clock controller prescalers.

The enhanced and general timers are completely independent, and do not share any resources.

They can be synchronized.

3.18 General Timer (GTMR)

The super timer consist of a 16-bit auto-reload counter driven by a programmable prescaler.

It may be used for a variety of purpose, including measuring the pulse lengths of input signals (input capture) or generating output waveform (output compare, PWM, complementary PWM with dead-time insertion).

Pulse length and waveform periods can be modulated from a few microseconds to several milliseconds using the timer prescaler and the clock controller prescalers.

The general timers are completely independent, and do not share any resources. They can be synchronized.

3.19 Basic Timer Controller (BTMR, LPBTMR)

There totally 10 32bits basic timers in V32F20x/ V32H20x. Among them, 8 timers are in the main power domain and can be used as regulate interrupt sources for CPU. The low power domain of two timers can work in deep sleep and can be used as the wake-up source of deep sleep.

3.20 Basic PWM Controller (BPWM)

There totally 8 16bits basic PWM timers in V32F20x/ V32H20x. The 16bits basic timer has the PWM and capture function. Each timer can generate individual interrupt to CPU. Each PWM can output 3 outputs with different output waveform, and each BPWM timer input can be selected to be the capture signal.

3.21 Universal serial high-speed (USB_HS)

The devices embed a USB high-speed (up to 480 Mb/s) device/host peripheral with integrated transceivers.

The USB HS supports both full-speed and high-speed operations. It integrates the transceivers for full-speed operation (12 MB/s) and high-speed operation (480 MB/s).

The USB HS peripheral is compliant with the USB 2.0 specification. It has software-configurable endpoint setting and supports suspend/resume. The USB high-speed controller requires a dedicated 12 MHz clock that is generated by a PLL connected to the HSE oscillator.

3.22 Universal serial bus full-speed (USB_FS)

The devices embed an USB full-speed device/host peripheral with integrated transceivers. The USB FS peripheral is compliant with the USB 1.1 specification.

It has software-configurable endpoint setting and supports suspend/resume. The USB full-speed controller requires a dedicated 48 MHz clock that is generated by a PLL connected to the HSE oscillator.

3.23 Digital Camera Interface (DCMI)

DCMI is a digital camera synchronous parallel interface able to receive 8/10/12/14 bit data flow from external CMOS camera module. It supports different data formats and compressed data (JPEG).

3.24 Secure Digital Input and Output (SDIO)

This document contains the User Specification of the SD Host core compatible with SD Host Controller Standard Specification version 4.00. The host controller serves devices compatible with SD Memory version 4.00 (SD, SDHC, SDXC), SDIO version 4.00, MMC/eMMC version 5.1. This host controller does not support the UHS-II Interface which was introduced in version 4.00 as optional. The document provides the core architecture description, register set description and sub-modules specification.

3.25 Serial Peripheral Interface (SPI)

■ Motorola SPI support

■ Full-duplex standard SPI

■ Master mode or slave mode operation

■ Programmable SPI clock parity and phase

■ Bidirectional and unidirectional transfer modes

■ 4 to 32 bits data size selection

■ With 32 bytes RX FIFO and 32 bytes TX FIFO

■ With 4 slave select lines

■ DMA controller interface – Enables the SPI to interface to a DMA controller over the bus using a handshaking interface for transfer requests.

■ Independent masking of interrupts

■ Frequency up to half of APB clock frequency

3.26 Inter-integrated Circuit Interface (I2C)

The I2C is a configurable, synthesizable, and programmable control bus that provides support for the communications link between integrated circuits in a system. It is a simple two-wire bus with a software-defined protocol for system control, which is used in temperature sensors and voltage level translators to EEPROMs, general-purpose I/O, A/D and D/A converters, CODECs, and many types of microprocessors.

3.27 Universal Asynchronous Receiver Transmitter (UART)

The UART controller is used to transmit/ receive data via UART protocol. Each UART controller can be program individually and has its own interrupt to CPU. The UART controller can support 8 bits transfer without parity or 9-bit transfer with even or odd parity. One 16bytes FIFO and one shift register are used for transmit engine, and another set of 16bytes FIFO and shift buffer are used for receive engine. For integration in systems where Infrared SIR serial data format is required, the UART can be configured for a software-programmable IrDA SIR Mode. If this mode is not selected, only the UART (RS232 standard) serial data format is available.

3.28 ISO7816 Controller (ISO7816)

The ISO7816 controller is an enhance UART protocol which is able to do half-duplex communication on the 2-wires bus. Each ISO7816 controller can be program individually and has its own interrupt to CPU. A clock divider is also included inside the IP which is capable to generate a 1~5 MHz clock for ISO7816 device. The setting in ISO7816 controller will be reset after wake-up from deep-sleep mode, programmer should restore the setting manually after wake-up from this state.

3.29 Basic Direct Memory Access Controller (BDMA)

The BDMA controller is used to transfer data from memory to memory or transfer data from memory to IO or from IO to memory. There are total 4 channels integrated in V32F20x/ V32H20x and each channel's priority is round-robin.

3.30 Basic Serial Peripheral Interface (BSPI)

A Basic Serial Peripheral Interface (BSPI) controller is built in V32F20x/ V32H20x to facilitate communicating with other devices and components. The setting in BSPI controller will be reset after wake up from deep-sleep mode, programmer should restore the setting manually after wake up from this state. The BSPICLK range supported by BSPI host mode is APBCLK/ 2/ 4/ 8/ 16/ 32/ 64/ 128. The maximum BSPICLK clock supported by BSPI slave mode is APBCLK /2.

3.31 UART32K Controller (UART32K)

The UART32K Controller is an APB-based slave which used to receive frame data from external. UART32K and RETRAM form a data transmission system in deep-sleep mode.

The UART32K controller is used to detect the active of UART14 ~ 19 bus and receive data via UART protocol. There is two UART_32K controllers in V32F20x/ V32H20x, which can select input from UART14~19 RX. UART_32K controller can operate at 32K RC or crystal frequency, so it can work under sleep or deep sleep mode. The maximum baud rate UART32K can support is 9600. The UART32K Controller can support 8 bits transfer without parity or 9bits transfer with even or odd parity. One data buffer and one shift register are used for receive engine. Receive data counts to generate wakeup source

can be configured to reduce power consumption.

3.32 HFM Coprocessor (HFM)

HFM Coprocessor is a dedicated module for processing the harmonic voltage and current in application. This engine is dedicated for system, offloading the calculation overload on CPU core. It has AHB slave interface that the system could configure and submit the command through this slave interface. It has an AHB Master for data fetch and processing. The T2F Engine could start fetching the waveform sampling and do the FFT calculation. The energy bucket can accumulate energy and output energy pulses by setting a threshold.

3.33 Software Define VGIO (VGIO)

The VGIO is a Vango properity special function module. It is use to remap the IO through the reconfiguration of registers. In V32F20x/ V32H20x, the VGIO is 32-32. That means in every 32 pins group, any IO could reassign to any IO in this group. The configuration to the register should be aided with a program to auto generated.

Vangotech

4 Electrical Characteristics

4.1 Absolute Maximum Ratings

Table 4-1 Absolute Maximum Ratings

Symbol	Parameters	Min	Max	Unit
$V_{DD}-V_{SS}$	External main supply voltage	–0.3	4	V
V_{IN}	Input voltage on any other pin	V_{SS}–0.3	4	
$\|V_{DDx}\|$	Variations between different VDD power pins	-	50	mV
$\|V_{SSX} - V_{SS}\|$	Variations between all the different ground pins	-	50	
$V_{ESD(HBM)}$	Electrostatic discharge voltage (human body model)			-

Table 4-2 Current characteristics

Symbol	Ratings	Max	Unit
I_{VDD}	Total current into VDD power lines (source)	120	mA
I_{VSS}	Total current out of VSS ground lines (sink)	120	
I_{IO}	Output current sunk by any I/O and control pin	25	
	Output current source by any I/Os and control pin	25	
$I_{INJ(PIN)}$	Injected current on any other pin	±5	
$\Sigma I_{INJ(PIN)}$	Total injected current (sum of all I/O and control pins)	±25	

Table 4-3 Thermal characteristics

Symbol	Ratings	Value	Unit
T_{STG}	Storage temperature range	–65 to +150	°C
T_J	Maximum junction temperature	125	°C

4.2 Recommended Operation Condition

Table 4-4 Recommended operation conditions

Symbol	Parameters	Min	Typ	Max	Unit

V_{DD}	External main supply voltage	2.3	3.3	3.63	V
V_{DDA}	Analog supply voltage	2.3	3.3	3.63	
V_{BAT}	RTC supply voltage	2.3	3.3	3.63	
V_{CAP}	Power supply for core (1.1V)	0.91	1.1	1.21	
V_{IN}	Input voltage on RST pins	–0.3		5.5	
	Input voltage on TTa pins	–0.3		V_{DD}+0.3	
	Input voltage on BOOT0 pin	0		9	
T_A	Ambient temperature	-40	25	125	℃
T_J	Junction temperature range	-40	25	125	
f_{HCLK0}	Internal AHB0 clock frequency	0	128	180/220	MHz
f_{PCLK0}	Internal APB0 clock frequency	0	128	128	
f_{PCLK1}	Internal AHB1 clock frequency	0	48	64	
f_{PCLK1}	Internal APB1 clock frequency	0	48	64	

4.3 ESD level

Table 4-5 ESD/LU immunity level

Symbol	Parameters	Test Method	Min	Max	Unit
$V_{ESD(HBM)}$	Electrostatic discharge (Human body model)		±2000	-	V
$V_{ESD(MM)}$	Electrostatic discharge (Machine model)		±200	-	V
$V_{ESD(CDM)}$	Electrostatic discharge (Charged device model)		±500	-	V
I_{LAT}	Latch up current		±150	-	mA

4.4 DC Specification

Table 4-6 DC characteristics table of 3.3V I/O

Parameters	Symbol	Power domain	Min	Typ	Max	Unit
I/O input high voltage	V_{IH}	V_{DD}	0.65*V_{DD}			V

I/O input low voltage	V_{IL}	V_{DD}			$0.2*V_{DD}$	V
Digital input high voltage	V_{IH}	V_{DD}	$0.65*V_{DD}$			V
Digital input low voltage	V_{IL}	V_{DD}			$0.2*V_{DD}$	V
Schmitt trigger hysteresis	V_{HYS}	V_{DD}	---	$0.1*V_{DD}$	$0.2*V_{DD}$	V
I/O output high voltage	V_{OH}	3.3V	$0.8*V_{DDIO}$	---	---	V
I/O output low voltage	VOL	3.3V	---	---	$0.2*V_{DD}$	V
Pull-up/Pull-down resister	R_{PUP}/R_{PDW}	V_{DD}	24	32	40	Kohm
Input leakage current of analog I/O	I_{L-ANA}	V_{DD}	---	5	---	nA
Input leakage current of digital I/O	I_{L-DIG}	V_{DD}	---	5	---	nA
Tri-State output leakage current	I_{OZ}	V_{DD}	---	5	---	nA
I/O input capacitance	C_{IN}	V_{DD}	---	---	10	pF

4.5 Clock

4.5.1 32K XOL

Table 4-7 32K XOL Characteristics

Symbol	Parameter	Condition	MIN	TYP	MAX	Unit
T_{su}	Start up time	CL=12pF; RF=10MΩ;		400	1000	ms
T_{stb}	Settling time	CL=12pF; RF=10MΩ;		800	2000	ms
I_{OP}	Operating current	CL=12pF; RF=10MΩ;		100		nA

4.5.2 XOH

Table 4-8 12M XOH Characteristics

Symbol	Parameter	Conditions	Min	Typ	Max	Unit
f_{HSE_ext}	External user clock source		-	12M	-	MHz

	frequency(1)	-				
V_{HSEH}	OSC_IN input pin high level voltage		$0.7V_{DD}$	-	V_{DD}	V
V_{HSEL}	OSC_IN input pin low level voltage		V_{SS}	-	$0.3V_{DD}$	
$t_{w(HSE)}$ $t_{w(HSE)}$	OSC_IN high or low time(1)		5	-	-	ns
$t_{r(HSE)}$ $t_{f(HSE)}$	OSC_IN rise or fall time(1)		-	-	20	
$C_{in(HSE)}$	OSC_IN input capacitance(1)	-	-	5	-	pF
$DuCy_{(HSE)}$	Duty cycle	-	45	-	55	%
I_L	OSC_IN Input leakage current	$V_{SS} \leqslant V_{IN} \leqslant V_{DD}$	-	-	±1	μA

(1) Guaranteed by design, not tested in production.

4.5.3 32K RC

Table 4-9 32K RC Characteristics

Symbol	Parameter	Conditions	Min	Typ	Max	Unit
f_{RC_trim}	frequency of output clock	-40℃~100℃	31.52	32.0	32.48	KHz
		-40℃~125℃	31.36	32.0	32.64	KHz
η_{RC}	Frequency variation ratio of oscillator	-40℃~100℃	-1.5	-	1.5	%
		-40℃~125℃	-2		2	
I_{OP_32K}	Static current of 32KHz oscillator	V_{CCA_OSC}=3.30V	-	90	-	nA
T_{SU}	32KHz clock delay time for set up		-	100	400	us
T_{STB}	32KHz clock delay time for stable		-	150	600	us

4.5.4 48M RC

Table 4-10 RCH Characteristics Table

Symbol	Parameter	Conditions	Min	Typ	Max	Unit
$f_{RC\text{-}trim}$	Trimming frequency of	-40℃~100℃ (All PV)	-	48	-	MHz

	output clock	-40℃~125℃ (All PV)	-	48	-	MHz
h_{RC}	Frequency variation ratio of oscillator	-40℃~100℃	-1.5	-	1.5	%
		-40℃~125℃	-3	-	3	
I_{OP-OSC}	Operating current of oscillator	CLKOUT=48MHz	-	91	164	uA
T_{ostb}	Clock delay time for stable	OSC_EN from "0" to "1"	-	12	14	us
T_{su}	Clock set up time for set up	OSC_EN from "0" to "1"	-	4	6	us

Note(1): This power down current is the result at the condition of ff corner, high voltage and high temperature.

4.5.5 PLL0 Specifications

Conditions: V_{DDA}=3.3V, V_{CAP}=1.1V, TA=-40°C~125°C.

Table 4-11 PLL0 specifications table

Symbol	Parameter	Conditions	MIN	TYP	MAX	Unit
f_{CKIN}	Frequency range of input clock		5	-	80	MHz
f_{CKI_PFD}	Input frequency range of PLL loop		5	-	10	MHz
f_{OUT_HF}	The frequency range of high frequency output clock which VCO directly generates		100	-	300	MHz
T_{LOCK}	PLL lock time		-	100	150	us
I_{OP_INT}	The operation current of 3.3V power supply	f_{OUT_HF} =100MHz~800MHz	-	5.7	-	uA/MHz

4.5.6 PLL1 Specifications

Table 4-12 PLL1 specifications table

Symbol	Parameter	MIN	TYP	MAX	Unit
f_{DIV}	Divided reference frequency range	30		375000	KHz
f_{OUT}	Total output frequency range	1.88		375	MHz

P_P	Period jitter (P-P) (max)			+/-2.5% output cycle	ps
I_{PD}	Power dissipation (nom)		20@ 30MHz (/1 output)		uA
t_{RST}	Reset pulse width (min)	5			μs
t_{LOCK}	Lock time (min allowed)	500 div. reference cycles			us

4.6 ADC Characteristics

The condition of typical performance is V_{DDA}=3.3V, V_{CAP}=1.1V, samplerate=1Mhz, 10KHz input signal, 25℃

Table 4-13 ADC Characteristics

Parameter	Conditions	MIN	TYP	MAX	Unit
Analog Input					
Full scale range	SDIF=0	V_{REFN}		V_{REFP}	V
	SDIF=1	2*(V_{REFP}-V_{REFN})			V
Input signal common mode	-	(V_{REFP}+V_{REFN})/2			V
ADC clock frequency (f_{ADC})	-	0.6		30	pF
External trigger frequency (f_{TRIG})				1764	kHz
Input sample capacitance	-		5		pF
Input switch equivalent impendence (Rs)	-			1000	ohm
Analog biasing					
Negative reference voltage	-	0	0	0	
Positive reference voltage	-	1.8	3.3	V_{DDA}	V
Power Supply Requirements					
Analog Supply voltage(V_{DDA})	-	1.8	3.3	3.6	V
Power Dissipation	@1Msps		385		uA
Timing characteristics					
The time of sample(ts)	Single conversion		NA		t_{clkp}

	Successive conversion		1.5		t_{clkp}
The time of Sampling and converting (tsp+con)			14		t_{clkp}
The time of channel and EOC(tsain)		1.5		11	t_{clkp}
Performance of SAR SDIF=0					
THD	-		-72		dB
ENOB			10.5		
SNDR	-		65		dB
DNL			±1		LSB
INL			±1.5		LSB
Offset error		-16		16	LSB
Performance of SAR SDIF=1					
THD	-		-72		dB
ENOB			11		
SNDR	-		68		dB
DNL			±1		LSB
INL			±1.5		LSB
Offset error		-16		16	LSB

4.7 DAC Characteristics

The condition of typical performance is V_{DDA}=3.3V, V_{CAP}=1.1V, samplerate=1Mhz, 25℃ without BUFFER.

Table 4-14 DAC Characteristics

Parameter	Conditions	MIN	TYP	MAX	Unit
Output stage					
Output voltage range	Capacitive load only	0		V_{REFP}	V
Output load	-	5			Kohm
				50	pf
Output Current				2	mA

Equivalent impedance to ground	disable mode (EN=0)	1			Mohm
Analog biasing					
Positive reference voltage (V_{REFP_DAC})	-	1.8	3.3	V_{REFP}	V
Negative reference voltage (V_{REFN_DAC})	-	0	0	0	V
Power Supply Requirements					
Analog Supply voltage (V_{DDA})	-	1.8	3.3	3.6	V
Work Current	BUF_EN=1		1300		uA
	BUF_EN=0		550		
Timing characteristics DAC capacitance load is 50pF and resistance load is 5Kohm					
The delay of DAC(t_d)	-		200		ns
The max rising respond(t_{sr})	-			350	ns
The max falling respond(t_{sf})	-			350	ns
The ring of DAC output(t_{ri})	-			60	ns
Performance of DAC					
THD	-		-65		dB
SNR	-		62		dB
ENOB	@12bit		10		Bit
DNL	@12bit	-1.2		+1.2	LSB
INL	@12bit	-1.6		+1.6	LSB
Gain	-		1		
Offset	@12bit	-10		+10	LSB

4.8 CMP Characteristics

Table 4-15 CMP Characteristics

Typical case: V_{DDA}=3.3V, V_{CAP} =1.1V, TEMP=25℃.

Symbol	Parameter	Condition	Min	Typ	Max	Unit
V_{DDA}	Input analog power voltage	-	1.80	3.3	3.63	V
V_{com}	put common voltage of	$\|V_{INP}-V_{INN}\| \geq 10mV$	0	-	V_{DDA}	V

	V_{INP}/V_{INN}					
V_{diff}	Effective differential voltage is $\|V_{INP}-V_{INN}\|$	V_{INP}/V_{INN} input range 0~V_{DDA} COMP_HYST = 0	5	-	-	mV
		V_{INP}/V_{INN} input range COMP_HYST = 1	25	-	-	mV
T_s	Caparator setup time	-		10		ns
V_{hy}	Hysteresis voltage of comparator	COMP_HYST = 0	-		1	mV
		COMP_HYST = 1		25		mV
I_{OP}	perating current of comparator (CMP_EN=1)	COMP_SPDPWR = 2'b00	-	2.5	-	uA
		COMP_SPDPWR = 2'b01	-	3	-	
		COMP_SPDPWR = 2'b10	-	20	-	
		COMP_SPDPWR = 2'b11	-	100	-	
T_{dly}	The flip delay of comparator (without hysteresis voltage)	$|V_{INP}-V_{INN}|\geq$100mV COMP_SPDPWR = 2'b00 CL=1pf, F=100kHz	-	1.5	-	us
		$|V_{INP}-V_{INN}|\geq$100mV COMP_SPDPWR = 2'b01 CL=1pf, F=100KHz	-	1.4	-	us
		$|V_{INP}-V_{INN}|\geq$100mV COMP_SPDPWR = 2'b10 CL=1pf, F=100kHz	-	200	-	ns
		$|V_{INP}-V_{INN}|\geq$100mV COMP_SPDPWR = 2'b11 CL=1pf, F=100kHz	-	50	-	ns
		$|V_{INP}-V_{INN}|\geq$25mV	-	1.6	-	us

		COMP_SPDPWR = 2'b00 CL=1pf, F=100kHz				
		$\|V_{INP}-V_{INN}\| \geq 25mV$ COMP_SPDPWR = 2'b01 CL=1pf, F=100kHz	-	1.5	-	us
		$\|V_{INP}-V_{INN}\| \geq 25mV$ COMP_SPDPWR = 2'b10 CL=1pf, F=100kHz	-	400	-	ns
		$\|V_{INP}-V_{INN}\| \geq 25mV$ COMP_SPDPWR = 2'b11 CL=1pf, F=100kHz	-	150	-	ns

Note 1: V_{com} and V_{diff} is shown as Figure 4-1.

Note 2: V_{hy} is shown as Figure 4-2.

Note 3: T_{dly} is shown as Figure 4-3.

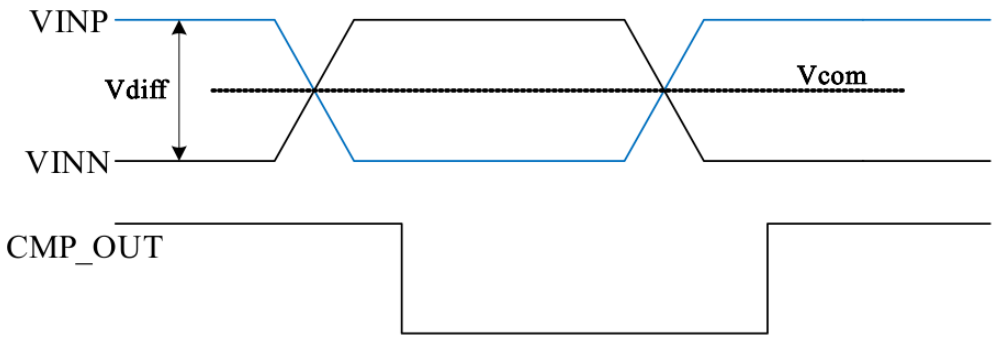

Figure 4-1 V_{com} and V_{diff} graph

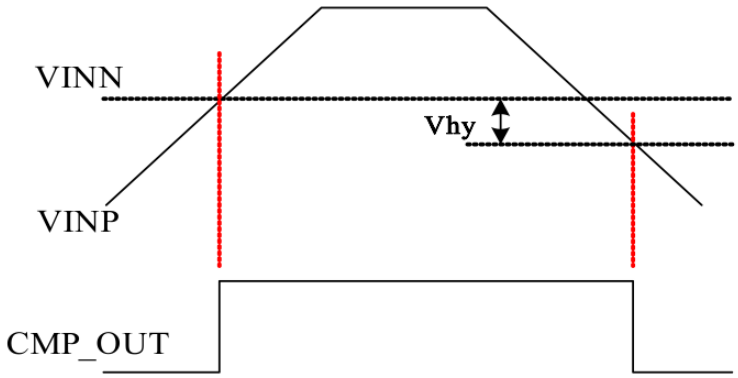

Figure 4-2 V_{hy} graph

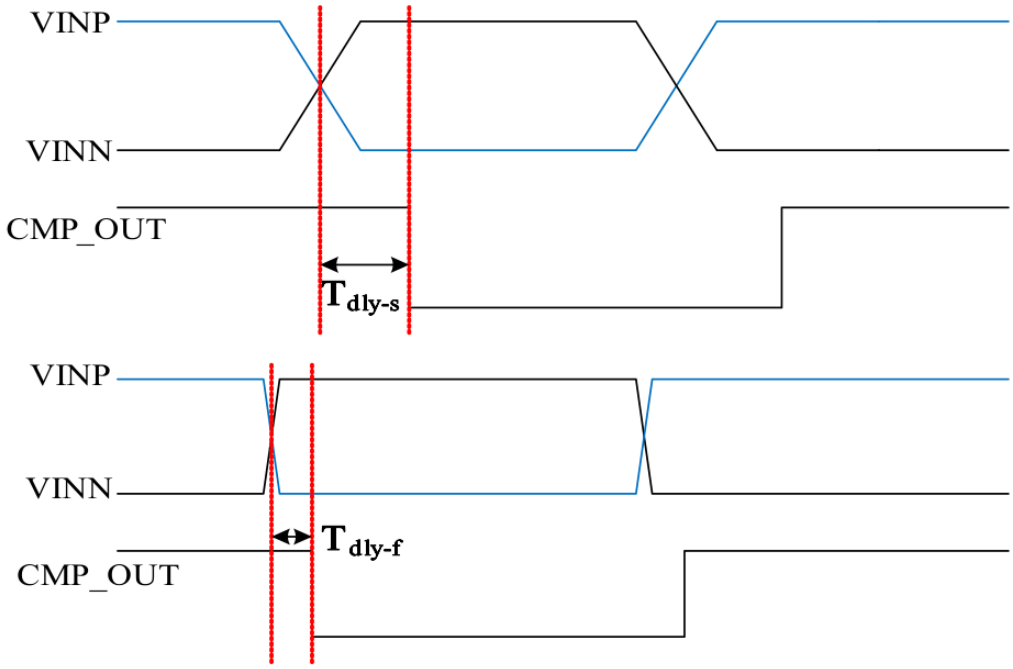

Figure 4-3 T_{dly} graph

4.9 USB Full Speed PHY

Table 4-16 Operating Conditions

Symbol	Description	Condition	Min.	Typ.	Max.	Unit
V_{DDA}	Analog power supply	-	3.0	3.3	3.6	V
I_{DDA}	Operating current of V_{DDA} domain under different modes.	Full-speed mode (12Mbps) (with 50pF load)	-	4.8	6	mA
		Full-speed mode (12Mbps) (with 5 meter cable)	-	33	38	mA
		Low-speed mode(1.5Mbps) (with 600pF load)	-	5	6	mA
		Suspend mode (With pull-up resistor connected on the DP)	-	-	250	uA
		Suspend mode (Without pull-up resistor connected on the DP)	-	-	2	uA
I_{CAP}	Operating current of VCAP domain under	Full-speed mode (12Mbps) (with 50pF load)	-	15	100	uA

	different modes.	Full-speed mode (12Mbnps) (with 5 meter cable)	- l	30	100	uA
		Low-speed mode(1.5Mbps) (with 600pF load)	-	5	15	uA
		Suspend mode (With pull-up resistor connected on the DP)	-	-	5	uA
		Suspend mode (Without pull-up resistor connected on the DP)	-	-	5	uA

Table 4-17 DC Characteristics of DP/DM

Symbol	Description	Condition	Min.	Typ.	Max.	Unit
USB 1.1 transceiver (FS)						
Input levels						
V_{DI}	Differential input sensitivity	|VI(DP) - VI(DM)|	0.2	-	-	V
V_{CM}	Differential common mode voltage	-	0.8	-	2.5	V
Input levels (Single-ended receiver)						
V_{IH}	High (driven)	-	2.0	-	-	V
V_{IHZ}	High (floating)	-	2.7	-	3.6	V
V_{IL}	Low	-	-	-	0.8	V
Output levels						
V_{OL}	Low-level output voltage	-	0	-	0.3	V
V_{OH}	High-level output voltage	-	2.8	-	3.6	V
V_{CRS}	Cross point of DP/DM	-	1.3	-	2.0	V
Terminations						
R_{PUI}	Pull-up resistor on upstream ports (idle bus)	-	0.9	1.2	1.575	KΩ
R_{PUA}	Pull-up resistor on upstream ports (upstream ports receiving)	-	1.425	2.3	3.090	KΩ

Table 4-18 Full-Speed Source Electrical Characteristics

Symbol	Description	Condition	Min.	Typ.	Max.	Unit
Driver characteristics						

t_{FR}	Rise time	CL=50 pF 10% ~ 90% of |VOH – VOL|	4	-	20	ns
t_{FF}	Fall time	CL=50 pF 90% ~ 10% of |VOH – VOL|	4	-	20	ns
t_{FRMA}	Differential rise/fall time matching (tFR/tFF)	-	90	-	111	%

Table 4-19 Low-Speed Source Electrical Characteristics

Symbol	Description	Condition	Min.	Typ.	Max.	Unit
Driver characteristics						
t_{LR}	Rise time	CL = 200 pF~ 600 pF 10% ~ 90% of |VOH – VOL|	75	-	300	ns
t_{LF}	Fall time	CL = 200pF ~ 600pF 90% ~ 10% of |VOH – VOL|	75	-	300	ns
t_{LRMA}	Differential rise/fall time matching (t_{LR}/t_{LF})	-	80	-	125	%

Table 4-20 Accepted Cable Characteristics

Symbol	Description	Condition	Min.	Typ.	Max.	Unit
Z_O	Differential cable impedance	-	76.5	90	103.5	Ω
Z_{CM}	Common mode cable impedance	-	21	30	39	Ω
T_{SKEW}	Cable skew	-	-	-	100	ps
C_{UC}	Unmated contact capacitance	-	-	-	2	pF

4.10 USB High Speed PHY

Table 4-21 Operating Conditions

Symbol	Description	Condition	Min.	Typ.	Max.	Unit
V_{DD}	power supply	-	3.0	3.3	3.6	V
I_{DDD}	Operating current under different modes	HS mode (480Mbps)	-	28	32	mA
		FS mode (12Mbps)	-	9	10.5	mA
		LS mode (12Mbps)	-	9	10.5	mA

		Suspend mode (Without pull-up resistor connected on the DP)	-	0.7	33	uA
		BC1.2 DCD mode	-	530	743	uA
		BC1.2 PD mode (Device)	-	3.97	5.32	mA
		BC1.2 PD mode (Host)	-	3.97	5.32	mA
		BC1.2 2nd Detection mode (Device)	-	3.97	5.32	mA

Table 4-22 DC Characteristics of DP/DM

Symbol	Description	Condition	Min.	Typ.	Max.	Unit
USB 2.0 transceiver (HS)						
Input levels						
V_{HSCM}	High-speed data signaling common mode voltage range	-	−50	-	500	mV
V_{HSSQ}	High-speed squelch detection threshold	Squelch detected	-	-	100	mV
		No squelch detected	200	-	-	mV
Output levels						
V_{HSOI}	High-speed idle level output voltage	-	−10	-	10	mV
V_{HSOL}	High-speed low level output voltage	-	−10	-	10	mV
V_{HSOH}	High-speed high level output voltage	-	360	400	440	mV
V_{CHIRPJ}	Chirp-J output voltage (Differential)	-	700	-	1100	mV
V_{CHIRPK}	Chirp-K output voltage (Differential)	-	−900	-	−500	mV
USB 1.1 transceiver (FS)						
Input levels						
V_{DI}	Differential input sensitivity	|VI(DP) - VI(DM)|	0.2	-	-	V
V_{CM}	Differential common mode voltage	-	0.8	-	2.5	V
Input levels (Single-ended receiver)						
V_{IH}	High (driven)	-	2.0	-	-	V
V_{IHZ}	High (floating)	-	2.7	-	3.6	V
V_{IL}	Low	-	-	-	0.8	V
Output levels						
V_{OL}	Low-level output voltage	-	0	-	0.3	V

V_{OH}	High-level output voltage	-	2.8	-	3.6	V
V_{CRS}	Cross point of DP/DM	-	1.3	-	2.0	V
Terminations						
R_{PU}	Pull-up resistor on upstream ports	-	1.05	1.5	1.95	KΩ

Table 4-23 High-Speed Source Electrical Characteristics

Symbol	Description	Condition	Min.	Typ.	Max.	Unit
Driver characteristics						
t_{HSRLEW}	Slew rate of rising edge	-	-	-	2133	V/usec
t_{HSFLEW}	Slew rate of falling edge	-	-	-	2133	V/usec
Driver waveform	-	Specified by eye pattern template in USB2.0 spec.	-	-	-	-
Clock timings						
THSRDRATE	High-speed data rate	-	479.76	-	480.24	Mbps
High-Speed data timings						
T_J	Data source jitter	Source and receiver jitter specified by the eye pattern template defined in USB2.0 spec.				
RX_{JT}	Receiver jitter tolerance					

Table 4-24 Full-Speed Source Electrical Characteristics

Symbol	Description	Condition	Min.	Typ.	Max.	Unit
Driver characteristics						
t_{FR}	Rise time	CL = 50pF 10% ~ 90% of |VOH – VOL|	4	-	20	ns
t_{FF}	Fall time	CL = 50pF 90% ~ 10% of |VOH – VOL|	4	-	20	ns
t_{FRMA}	Differential rise/fall time matching (t_{FR}/t_{FF})	-	90	-	110	%
Clock timings						
$T_{FSTXDRATE}$	Full-speed TX data rate	-	11.994	-	12.006	Mbps
$T_{FSRXDRATE}$	Full-speed RX data rate	-	11.97	-	12.03	Mbps

Table 4-25 Low-Speed Source Electrical Characteristics

Symbol	Description	Condition	Min.	Typ.	Max.	Unit
Driver characteristics						

t_{FR}	Rise time	CL = 200 pF~ 600 pF 10% ~ 90% of $\|V_{OH} - V_{OL}\|$	75	-	300	ns
t_{FF}	Fall time	CL = 200pF ~ 600pF 90% ~ 10% of $\|V_{OH} - V_{OL}\|$	75	-	300	ns
t_{FRMA}	Differential rise/fall time matching (t_{FR}/t_{FF})	-	80	-	125	%
Clock timings						
$T_{LSTXDRATE}$	Low-speed TX data rate	-	1.49925	-	1.50075	Mbps
$T_{LSRXDRATE}$	Low-speed RX data rate	-	1.49925	-	1.50075	Mbps

Table 4-26 Accepted Cable Characteristics

Symbol	Description	Condition	Min.	Typ.	Max.	Unit
Z_O	Differential cable impedance (High-/full- speed)	-	76.5	90	103.5	Ω
Z_{CM}	Common mode cable impedance (High-/full- speed)	-	21	30	39	Ω
T_{SKEW}	Cable skew	-	-	-	100	ps
C_{UC}	Unmated contact capacitance	-	-	-	2	pF

4.11 Power Consumption

The total power consumption on VDD, digital power consumption on DVCC and power consumption on BATRTC under low power mode with all periphral clock off.

Table 4-27 Power consumption of the system in 3-core mode

Description	Condition	Min.	Typ.	Max.	Unit
Power_IDLE	Enter IDLE mode by WFE instruction.		33.2		mA
Power_SLEEP	Under sleep mode.		11.7		mA
Power_DSLEEP	Under deep sleep mode.		0.57		mA
Power_RTCONLY	Enter RTC only mode by program with VDD on.		11.3		uA

Power consumption of the system in 3-core mode under different pll0 clock frequencies, PCLK uses 2 frequency division.

Table 4-28 Power consumption of the system in 3-core mode

Description	Condition	Min.	Typ.	Max.	Unit

Power_128M_ALLON	With all periphral clock on.		64.7		mA
Power_144M_ALLON	With all periphral clock on.		69.9		mA
Power_180M_ALLON	With all periphral clock on.		81		mA
Power_192M_ALLON	With all periphral clock on.		85.3		mA
Power_128M	With all periphral clock off.		32.9		mA
Power_144M	With all periphral clock off.		35.1		mA
Power_180M	With all periphral clock off.		39.2		mA
Power_192M	With all periphral clock off.		40.8		mA

Power consumption of the system with different number of cores, which operated at RCH clock With all periphral clock off.

Table 4-29 Overall power consumption for different number of cores

Description	Condition	Min.	Typ.	Max.	Unit
CM33 core0,CM33 core1,CM0	HCLK and PCLK uses RCH, all periphral clock off.		25.3		mA
CM33 core0, CM33 core1	HCLK and PCLK uses RCH, all periphral clock off.		22		mA
CM33 core0	HCLK and PCLK uses RCH, all periphral clock off.		21.6		mA

Table 4-30 Power consumption of different RCH frequency division in dual core mode

Description	Condition	Min.	Typ.	Max.	Unit
RCH	HCLK and PCLK uses RCH, all periphral clock off.		25.3		mA
RCH_DV2	HCLK and PCLK uses RCH of divison 2, all periphral clock off.		22.7		mA
RCH_DV4	HCLK and PCLK uses RCH of divison 4, all periphral clock off.		20.6		mA
RCH_DV48	HCLK and PCLK uses RCH of divison 48, all periphral clock off.		18.7		mA

Table 4-31 Digital power consumption under sleep and reset, analog power consumption

Description	Condition	Min.	Typ.	Max.	Unit
I_{VCC}	Reset		19.4		mA
	Power_SLEEP		11.7		
I_{DVCC}	Reset		18.6		mA
	Power_SLEEP		8.9		

4.12 Module Speed Rate

Table 4-32 Module Speed Rate

Description	Condition	Min.	Typ.	Max.	Unit
UART Baudrate	uart_clk/16, uart_clk ≤ 64 MHz			4	MHz
SPI	Transfer Mode spi_clk/2, spi_clk ≤ 64 MHz			32	MHz
	Received mode spi_clk/8, spi_clk ≤ 64 MHz			8	MHz
BSPI	Transfer Mode bspi_clk/2, bspi_clk ≤ 24 MHz			12	MHz
	Received mode bspi_clk/2, bspi_clk ≤ 24 MHz			12	MHz
I2C	Standard mode			100	KHz
	Fast mode			400	KHz
	Fast mode plus			1000	KHz
OSPI	ospi_clk ≤ 180 MHz			90	MHz

5 Pinouts and pin description

5.1 LQFP-176 Characteristics

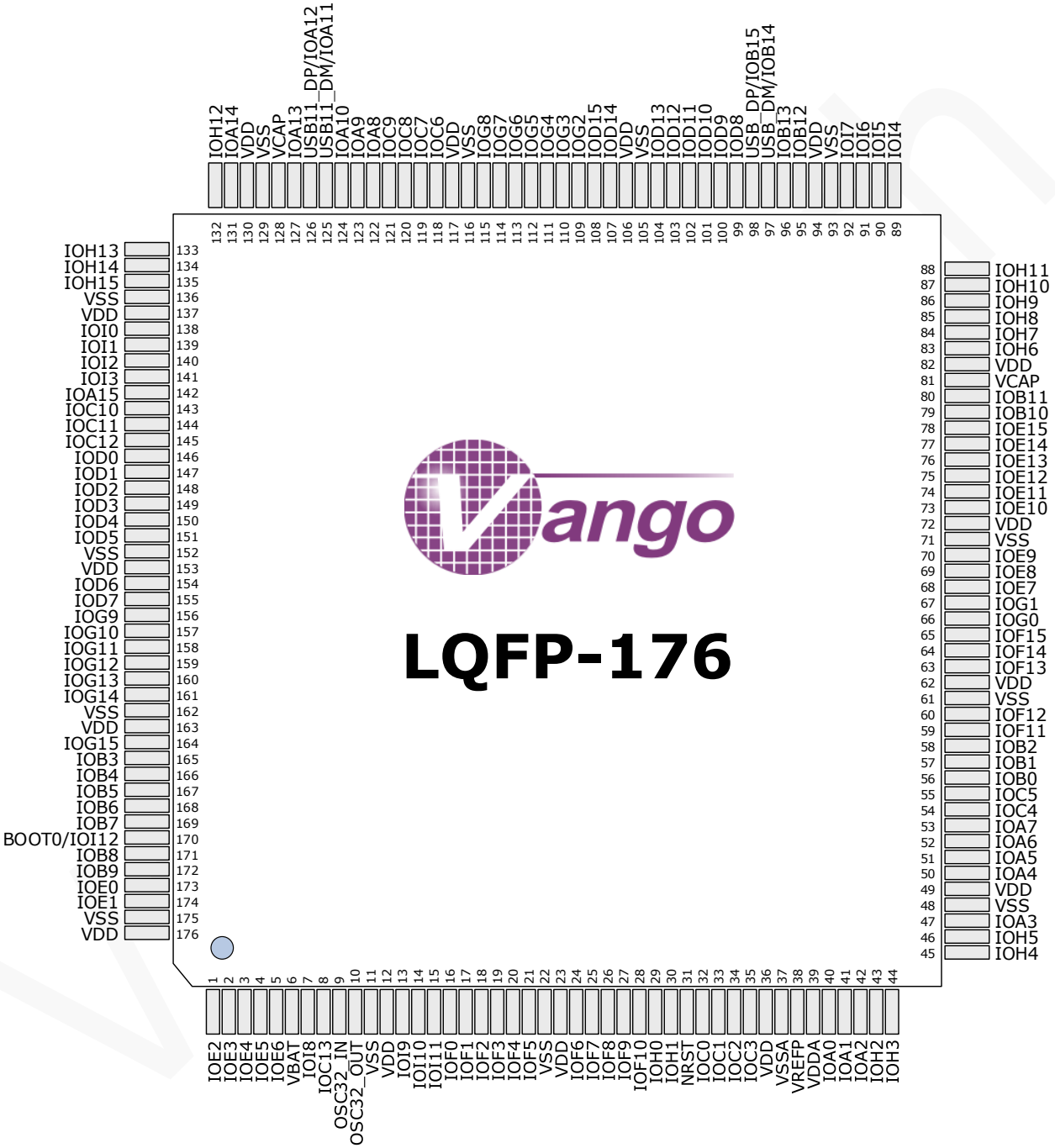

Figure 5-1 LQFP-176 Assignments

5.2 LQFP-144 Characteristics

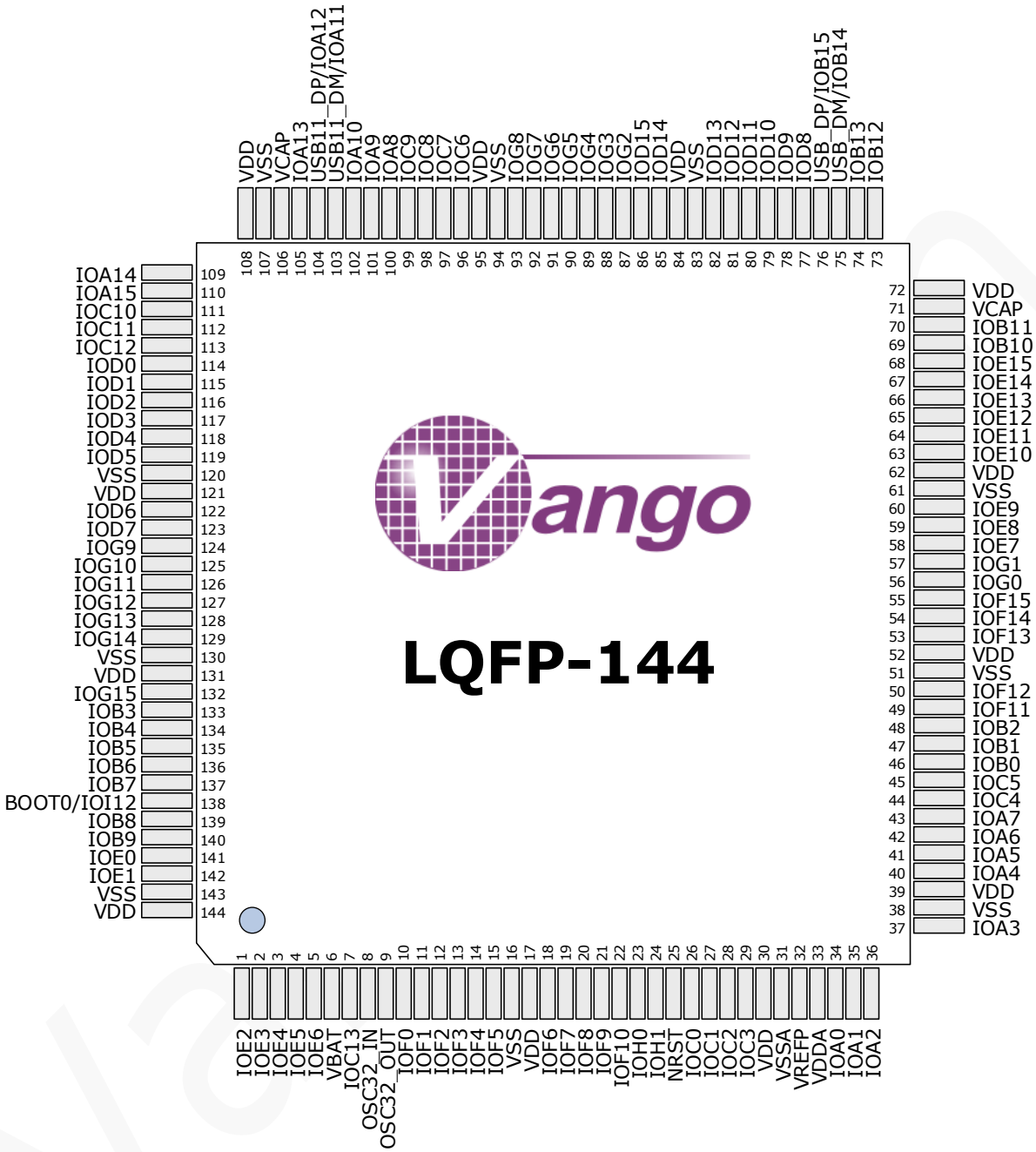

Figure 5-2 LQFP-144 Assignments

5.3 LQFP-100 Characteristics

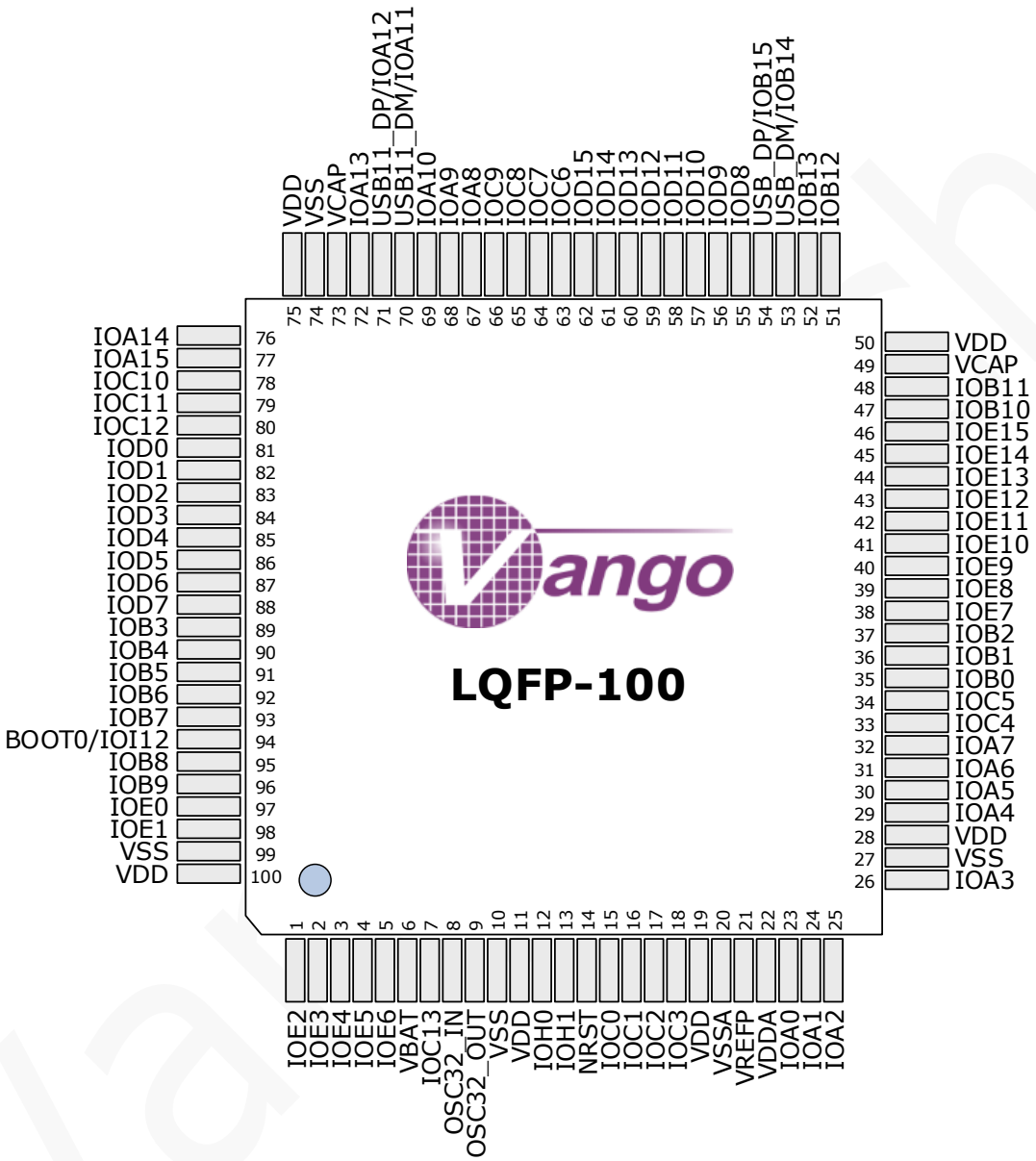

Figure 5-3 LQFP-100 Assignments

5.4 LQFP-64 Characteristics

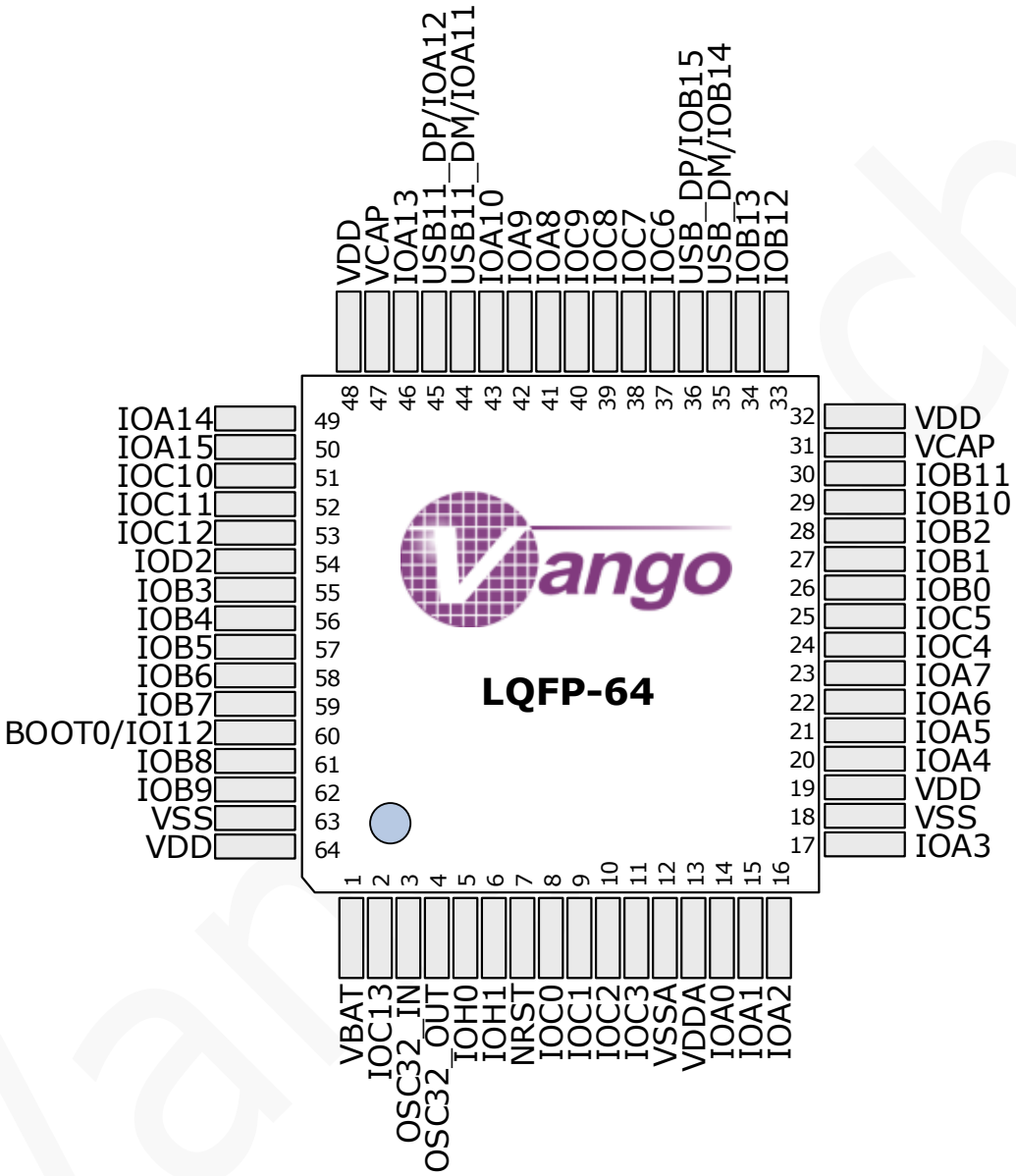

Figure 5-4 LQFP-64 Assignments

5.5 V32F20x/V32H20x pin definitions

Table 5-1 lists the characteristics of V32F20X/ V32H20x pins.

Table 5-1. Pin Characteristics

NO.	V32F207IGT61A	V32F207ZGT61A	V32F207VGT61A	V32F205RGT61A	Type	Description
1	3	3	3		I/O	IOE4/ FC11_SCL_SSEL1/ DCMI_D4/ EVENTOUT
2	4	4	4		I/O	IOE5/ BTMR0_3_EXT_CLK/ DCMI_D6/ EVENTOUT
3	5	5	5		I/O	IOE6/ DCMI_D7/ EVENTOUT
4	6	6	6	1	I	VBAT, decouple by 0.1 uF cap. It must be connected to VDD.

5	7				I/O	IOI8/ RTC_DET2/ RTC_CMP1_ANA
6	8	7	7	2	I/O	IOC13/ RTC_DET1/ RTC_CMP1_OUT
7					I/O	IOC14/ RTC_SP_0/ RTC_CMP2_ANA
8					I/O	IOC15/ RTC_CMP2_OUT
9					G	VSS_RTC
10					P	VCC_RTC, decouple by 0.1 uF cap
11					P	VCAP_RTC
12					P	VCC_PMU, decouple by 0.1 uF cap
13					P	VBAT, decouple by 0.1 uF cap
14					P	VCC_RTC, decouple by 0.1 uF cap
15	9	8	8	3	I	OSC32_IN
16	10	9	9	4	O	OSC32_OUT
17					G	AGND_PMU

18					G	AGND_IO
19					O	TM0_64K
20					O	TM1_64K
21					I	VPP_64K, power for 64K Flash
22	11				G	VSS
23	12				P	VDD, decouple by 0.1 uF capacitor
24	13				I/O	IOI9/ FC11_SCK/ CAN0_RX/ EVENTOUT
25	14				I/O	IOI10/ FC11_SSEL3/ SDIO1_CMD/ EVENTOUT
26	15				I/O	IOI11/ FC1_SSEL3/ FC11_SSEL2/ SDIO1_D3/ EVENTOUT
27	16	10			I/O	IOF0/ FC1_SDA_SSEL0*/

						SDIO1_D0/ EVENTOUT
28	17	11			I/O	IOF1/ FC1_SCL_SSEL1*/ SDIO1_D1/ EVENTOUT
29	18	12			I/O	IOF2/ FC1_SSEL2*/ SDIO1_D2/ EVENTOUT
30	19	13			I/O	IOF3/ FC1_SCK/ SDIO1_CLK/ EVENTOUT
31	20	14			I/O	IOF4/ FC1_RXD_SDA_MOSI/ SDIO1_D4/ EVENTOUT
32	21	15			I/O	IOF5/ FC1_TXD_SCL_MISO/ SDIO1_D5/

						EVENTOUT
33	22	16	10		G	VSS
34	23	17	11		P	VDD, decouple by 0.1 uF capacitor
35	24	18			I/O	IOF6/ BPWM0/ FC10_SCL_SSEL1/ SDIO1_D6/ EVENTOUT
36	25	19			I/O	IOF7/ BPWM1/ FC10_SDA_SSEL0/ SDIO1_D7/ EVENTOUT
37	26	20			I/O	IOF8/ BPWM2/ FC10_SCK/ RMDCLK1/ EVENTOUT
38	27	21			I/O	IOF9/ BPWM3/ FC10_SSEL2/

						RMDIO1/ EVENTOUT
39	28	22			I/O	IOF10/ FC10_SSEL3/ RMII1_CRS_DV / EVENTOUT
40	29	23	12	5	I/O	IOH0/ OSC_IN
41	30	24	13	6	I/O	IOH1/ OSC_OUT
42					P	VCAP, decouple by 0.1 uF capacitor.
43	31	25	14	7	I	NRST
44	32	26	15	8	I/O	IOC0/ RMII1_CLK_IN/ EVENTOUT/ ADC01_IN10
45	33	27	16	9	I/O	IOC1/ RMDCLK0/ EVENTOUT/ ADC01_IN11
46	34	28	17	10	I/O	IOC2/

						FC4_TXD_SCL_MISO*/ RMII1_RXD0/ EVENTOUT/ ADC01_IN12
47	35	29	18	11	I/O	IOC3/ FC4_RXD_SDA_MOSI*/ RMII1_RXD1/ EVENTOUT/ ADC01_IN13
48	36	30	19		P	VDD, decouple by 0.1 uF capacitor
49	37	31	20	12	G	VSSA
50					G	VREF-, connect to ground
51	38	32	21	13	I	VREFP+
52	39	33	22	13	P	VDDA, decouple by 0.1 uF capacitor. It must be connected to VDD.
53					P	VDD, decouple by 0.1 uF capacitor
54	40	34	23	14	I/O	IOA0/ GTMR0_IO1_ETR/ GTMR3_IO1/ ETMR1_ETR/ FC7_SDA_SSEL0*/

						FC10_TXD_SCL_MISO*/ EVENTOUT/ ADC01_IN0/
55	41	35	24	15	I/O	IOA1/ GTMR0_IO2/ GTMR3_IO2/ FC7_SCL_SSEL1*/ FC10_RXD_SDA_MOSI*/ RMII0_CLK_IN/ EVENTOUT/ ADC01_IN1/
56	42	36	25	16	I/O	IOA2/ GTMR0_IO3/ GTMR3_IO3/ FC7_TXD_SCL_MISO*/ RMDIO0/ EVENTOUT/ ADC01_IN2/
57	43				I/O	IOH2/ FC7_SSEL3/ RMII1_TX_EN/

						EVENTOUT
58	44				I/O	IOH3/ FC7_SSEL2/ RMII1_TXD0/ EVENTOUT
59	45				I/O	IOH4/ FC1_SCL_SSEL1*/ ISO78160_CLK/ SDIO1_WR_PRT/ EVENTOUT
60	46				I/O	IOH5/ FC1_SDA_SSEL0*/ ISO78160_DAT/ SDIO1_CARD_DET/ EVENTOUT
61	47	37	26	17	I/O	IOA3/ GTMR0_IO4/ GTMR3_IO4/ FC7_RXD_SDA_MOSI*/ RMII1_TXD1/ EVENTOUT/

						ADC01_IN3
62					P	VCAP, decouple by 0.1 +10 uF capacitor.
63	48	38	27	18	G	VSS
64	49	39	28	19	P	VDD, decouple by 0.1 uF capacitor
65	50	40	29	20	I/O	IOA4/ I2S1_WS/ FC3_SDA_SSEL0*/ FC5_SDA_SSEL0*/ FC7_SCK*/ DCMI_HSYNC/ EVENTOUT/ ADC01_IN4/ DAC_OUT1
66	51	41	30	21	I/O	IOA5/ GTMR0_IO1_ETR/ ETMR1_O1_N/ FC3_SCK*/ EVENTOUT/ ADC01_IN5/ DAC_OUT2

67	52	42	31	22	I/O	IOA6/ ETMR0_BKIN/ GTMR1_IO1/ ETMR1_BKIN/ FC3_TXD_SCL_MISO*/ DCMI_PIXCLK/ EVENTOUT/ ADC01_IN6
68	53	43	32	23	I/O	IOA7/ ETMR0_O1_N/ GTMR1_IO2/ ETMR1_O1_N/ FC3_RXD_SDA_MOSI*/ RMII0_CRS_DV / EVENTOUT/ ADC01_IN7
69	54	44	33	24	I/O	IOC4/ FC3_SCL_SSEL1/ RMII0_RXD0/ EVENTOUT/ ADC01_IN14

70	55	45	34	25	I/O	IOC5/ FC3_SSEL2/ RMII0_RXD1/ EVENTOUT/ ADC01_IN15
71	56	46	35	26	I/O	IOB0/ ETMR0_O2_N/ GTMR1_IO3/ ETMR1_O2_N/ FC3_SSEL3/ EVENTOUT/ ADC01_IN8
72	57	47	36	27	I/O	IOB1/ ETMR0_O3_N/ GTMR1_IO4/ ETMR1_O3_N/ EVENTOUT/ ADC01_IN9
73	58	48	37	28	I/O	IOB2/ EVENTOUT
74	59	49			I/O	IOF11/

						MCO4/ GTMR3_ETR/ DCMI_D12/ EVENTOUT
75	60	50			I/O	IOF12/ FC13_SCK/ EADC_CLK/ OSPI1_CLK/ EVENTOUT
76	61	51			G	VSS
77	62	52			P	VDD, decouple by 0.1 uF capacitor
78	63	53			I/O	IOF13/ FC13_SDA_SSEL0/ EADC_D0/ OSPI1_IO3/ EVENTOUT
79	64	54			I/O	IOF14/ FC13_SCL_SSEL1/ EADC_D1/ OSPI1_IO4/ EVENTOUT

80	65	55			I/O	IOF15/ FC13_RXD_SDA_MOSI/ EADC_D2/ OSPI1_IO5/ EVENTOUT
81	66	56			I/O	IOG0/ FC13_TXD_SCL_MISO/ EADC_D3/ OSPI1_IO6/ EVENTOUT
82	67	57			I/O	IOG1/ FC13_SSEL2/ EADC_D4/ OSPI1_IO7/ EVENTOUT
83	68	58	38		I/O	IOE7/ ETMR0_ETR/ FC13_SSEL3/ EADC_D5/ OSPI1_IO2/ EVENTOUT

84	69	59	39		I/O	IOE8/ ETMR0_O1_N/ FC12_SCK/ EADC_D6/ OSPI1_CLK_N/ EVENTOUT
85	70	60	40		I/O	IOE9/ ETMR0_IO1/ FC12_SDA_SSEL0/ EADC_D7/ EVENTOUT
86	71	61			G	VSS
87	72	62			P	VDD, decouple by 0.1 uF capacitor
88	73	63	41		I/O	IOE10/ ETMR0_O2_N/ FC12_SCL_SSEL1/ OSPI1_CS_N/ EVENTOUT
89	74	64	42		I/O	IOE11/ ETMR0_IO2/ FC12_RXD_SDA_MOSI*/

						OSPI1_IO1/ EVENTOUT
90	75	65	43		I/O	IOE12/ MCO3/ ETMR0_O3_N/ FC12_TXD_SCL_MISO*/ EVENTOUT
91	76	66	44		I/O	IOE13/ ETMR0_IO3/ FC12_SSEL2/ OSPI1_TXDM_RXDS/ EVENTOUT
92	77	67	45		I/O	IOE14/ ETMR0_IO4/ FC12_SSEL3/ OSPI1_IO0/ EVENTOUT
93	78	68	46		I/O	IOE15/ ETMR0_BKIN/ FC2_SCK/ EVENTOUT

94	79	69	47	29	I/O	IOB10/ I2S0_SCK*/ GTMR0_IO3/ FC1_SCL_SSEL1*/ FC4_SCK*/ FC8_TXD_SCL_MISO*/ EVENTOUT
95	80	70	48	30	I/O	IOB11/ GTMR0_IO4/ FC1_SDA_SSEL0*/ FC8_RXD_SDA_MOSI*/ RMII0_TX_EN/ EVENTOUT
96	81	71	49	31	P	VCAP, decouple by 0.1 uF capacitor.
97	82	72	50	32	P	VDD, decouple by 0.1 capacitor
98	83				I/O	IOH6/ LPBTMR0_EXTIN/ FC1_SSEL2*/ EVENTOUT
99	84				I/O	IOH7/

						LPBTMR1_EXTIN/ FC2_SCL_SSEL1*/ EVENTOUT
100	85				I/O	IOH8/ FC2_SDA_SSEL0*/ DCMI_HSYNC/ EVENTOUT
101	86				I/O	IOH9/ FC2_SSEL2*/ DCMI_D0/ EVENTOUT
102	87				I/O	IOH10/ GTMR3_IO1/ FC2_RXD_SDA_MOSI/ DCMI_D1/ EVENTOUT
103	88				I/O	IOH11/ GTMR3_IO2/ FC2_TXD_SCL_MISO/ DCMI_D2/ EVENTOUT

104	89				I/O	IOI4/ ETMR1_BKIN/ FC0_TXD_SCL_MISO/ DCMI_D5/ EVENTOUT
105	90				I/O	IOI5/ ETMR1_IO1/ FC0_SSEL3/ DCMI_VSYNC/ EVENTOUT
106	91				I/O	IOI6/ ETMR1_IO2/ FC5_SCL_SSEL1/ DCMI_D6/ EVENTOUT
107	92				I/O	IOI7/ ETMR1_IO3/ FC5_SSEL2/ FC11_TXD_SCL_MISO*/ DCMI_D7/ EVENTOUT

108	93				G	VSS
109	94				P	VDD, decouple by 0.1 uF capacitor
110	95	73	51	33	I/O	IOB12/ I2S0_WS*/ ETMR0_BKIN/ FC1_SSEL2*/ FC4_SDA_SSEL0*/ FC8_SCK*/ CAN1_RX/ RMII0_TXD0/ EVENTOUT
111	96	74	52	34	I/O	IOB13/ I2S0_SCK*/ ETMR0_O1_N/ FC4_SCK*/ FC8_SDA_SSEL0*/ CAN1_TX/ RMII0_TXD1/ EVENTOUT
112	97	75	53	35	I/O	IOB14/ USB_DM/

						ETMR0_O2_N/ ETMR1_O2_N/ FC4_TXD_SCL_MISO*/ FC8_SCL_SSEL1*/ EVENTOUT
113					G	USB_GND
114					P	USB_VCC, decouple by 0.1 uF capacitor
115					O	USB_PG, power for USB11
116	98	76	54	36	I/O	IOB15/ USB_DP/ ETMR0_O3_N/ ETMR1_O3_N/ FC4_RXD_SDA_MOSI*/ I2S0_SD/ EVENTOUT
117	99	77	55		I/O	IOD8/ FC8_TXD_SCL_MISO*/ ISO78160_CLK/ OSPI0_IO3/ EVENTOUT
118	100	78	56		I/O	IOD9/

						FC8_RXD_SDA_MOSI*/ ISO78160_DAT/ OSPI0_IO2/ EVENTOUT
119					P	VDD, decouple by 0.1 uF capacitor
120					P	VPP_16K, power for 16K Flash
121					O	TM1_16K
122					O	TM0_16K
123	101	79	57		I/O	IOD10/ FC8_SCK*/ OSPI0_IO1/ EVENTOUT
124	102	80	58		I/O	IOD11/ FC8_SDA_SSEL0*/ OSPI0_IO0/ EVENTOUT
125	103	81	59		I/O	IOD12/ GTMR2_IO1/ FC8_SCL_SSEL1*/ OSPI0_IO6/ EVENTOUT

126	104	82	60		I/O	IOD13/ GTMR2_IO2/ FC8_SSEL2/ OSPI0_IO7/ EVENTOUT
127	105	83			G	VSS
128	106	84			P	VDD, decouple by 0.1 uF capacitor
129	107	85	61		I/O	IOD14/ GTMR2_IO3/ FC8_SSEL3/ OSPI0_IO4/ UART15_RX/ EVENTOUT
130	108	86	62		I/O	IOD15/ GTMR2_IO4/ FC4_SSEL2/ OSPI0_IO5/ UART15_TX/ EVENTOUT
131	109	87			I/O	IOG2/ FC4_SCK*/

Vangotech

						ISO78160_CLK/ OSPI0_CLK/ UART16_RX/ EVENTOUT
132	110	88			I/O	IOG3/ FC4_SCL_SSEL1/ ISO78160_DAT/ OSPI0_TXDM_RXDS/ UART16_TX/ EVENTOUT
133	111	89			I/O	IOG4/ FC4_SDA_SSEL0*/ ISO78161_CLK/ OSPI0_CLK_N/ BSPI4_CK/ EVENTOUT
134	112	90			I/O	IOG5/ FC4_SSEL3/ ISO78161_DAT/ OSPI0_CS_N/ BSPI4_CS/

						EVENTOUT
135	113	91			I/O	IOG6/ BSPI4_MISO/ EVENTOUT
136	114	92			I/O	IOG7/ FC9_SCK*/ BSPI4_MOSI/ EVENTOUT
137	115	93			I/O	IOG8/ FC9_SCL_SSEL1*/ RMDPPS_OUT0/ UART17_RX/ EVENTOUT
138	116	94			G	VSS
139	117	95			P	VDD, decouple by 0.1 uF capacitor
140	118	96	63	37	I/O	IOC6/ I2S0_MCK/ GTMR1_IO1/ ETMR1_IO1/ FC9_TXD_SCL_MISO*/ SDIO0_D6/

						DCMI_D0/ UART17_TX/ EVENTOUT
141	119	97	64	38	I/O	IOC7/ GTMR1_IO2/ ETMR1_IO2/ I2S1_MCK/ FC9_RXD_SDA_MOSI*/ SDIO0_D7/ DCMI_D1/ BSPI0_CK/ EVENTOUT
142	120	98	65	39	I/O	IOC8/ GTMR1_IO3/ ETMR1_IO3/ FC9_SCK*/ SDIO0_D0/ DCMI_D2/ BSPI0_CS/ EVENTOUT
143	121	99	66	40	I/O	IOC9/

						MCO2/ GTMR1_IO4/ ETMR1_IO4/ FC2_SDA_SSEL0*/ FC12_TXD_SCL_MISO*/ SDIO0_D1/ DCMI_D3/ BSPI0_MISO/ EVENTOUT
144	122	100	67	41	I/O	IOA8/ MCO1/ ETMR0_IO1/ FC2_SCL_SSEL1*/ FC6_SCK/ FC12_RXD_SDA_MOSI*/ BSPI1_CK/ EVENTOUT/ CMP1_OUT
145	123	101	68	42	I/O	IOA9/ ETMR0_IO2/ FC2_SSEL2*/

						FC6_TXD_SCL_MISO*/ DCMI_D0/ BSPI0_MOSI/ EVENTOUT
146	124	102	69	43	I/O	IOA10/ ETMR0_IO3/ FC6_RXD_SDA_MOSI*/ DCMI_D1/ BSPI1_CS/ EVENTOUT
147					P	VDD, decouple by 0.1 uF capacitor
148	125	103	70	44	I/O	IOA11/ USB11_DM/ ETMR0_IO4/ FC6_SDA_SSEL0/ CAN0_RX/ BSPI1_MISO/ EVENTOUT/ CMP1_P
149	126	104	71	45	I/O	IOA12/ USB11_DP/

						ETMR0_ETR/ FC6_SCL_SSEL1/ CAN0_TX/ BSPI1_MOSI/ EVENTOUT/ CMP1_N
150	127	105	72	46	I/O	IOA13/ SWDIO/ EVENTOUT
151	128	106	73	47	P	VCAP, decouple by 0.1 +10 uF capacitor.
152					P	V11_CORE, decouple by 0.1 +10 uF capacitor
153	129	107	74		G	AGND_IO
154	130	108	75	48	P	VCC_IO, decouple by 0.1 uF capacitor
155					P	VCC_PMU, decouple by 0.1 uF capacitor
156					G	AGND_PMU
157					I	VFB_BUCK
158					P	VCC_DRV, decouple by 0.1 uF capacitor
159					O	VX_BUCK, connected with a 3.3 uF inductor and then connected with a 10 + 0.1 uF capacitor to the ground. The capacitor positive stage is connected to VCAP and VFB_BUCK.

160					G	AGND_DRV
161	131	109	76	49	I/O	IOA14/ SWCLK/ EVENTOUT
162	132				I/O	IOH12/ GTMR3_IO3/ FC2_SSEL3/ DCMI_D3/ BPWM6/ EVENTOUT
163	133				I/O	IOH13/ ETMR1_O1_N/ FC6_SSEL3/ CAN0_TX/ BSPI2_MISO/ EVENTOUT
164	134				I/O	IOH14/ ETMR1_O2_N/ FC6_SSEL2/ SDIO0_WR_PRT/ DCMI_D4/

						I2C14_SCL/ EVENTOUT
165	135				I/O	IOH15/ ETMR1_O3_N/ SDIO0_CARD_DET/ DCMI_D11/ I2C14_SDA/ EVENTOUT
166	136				G	VSS
167	137				P	VDD, decouple by 0.1 uF capacitor
168	138				I/O	IOI0/ I2S0_WS/ RTC_PLLDIV_O/ GTMR3_IO4/ FC4_SDA_SSEL0*/ DCMI_D13/ BPWM7/ EVENTOUT/ CMP2_P
169	139				I/O	IOI1/ I2S0_SCK*/

						RTC_PLLDIV_I/ FC4_SCK*/ ENGY_CF2/ DCMI_D8/ ENGY_CF1/ EVENTOUT/ CMP2_N
170	140				I/O	IOI2/ ETMR1_IO4/ FC4_TXD_SCL_MISO*/ DCMI_D9/ BSPI2_CS/ EVENTOUT/ CMP2_OUT
171	141				I/O	IOI3/ ETMR1_ETR/ FC4_RXD_SDA_MOSI*/ ISO78162_CLK/ DCMI_D10/ BSPI2_MOSI/ EVENTOUT

172	142	110	77	50	I/O	IOA15/ I2S1_WS/ GTMR0_IO1_ETR/ FC3_SDA_SSEL0*/ FC5_SDA_SSEL0*/ ISO78162_DAT/ BSPI3_CS/ EVENTOUT
173	143	111	78	51	I/O	IOC10/ I2S1_SCK*/ FC5_SCK*/ FC8_TXD_SCL_MISO*/ FC10_TXD_SCL_MISO*/ SDIO0_D2/ DCMI_D8/ BSPI2_CK/ EVENTOUT
174	144	112	79	52	I/O	IOC11/ FC5_TXD_SCL_MISO*/ FC8_RXD_SDA_MOSI*/ FC10_RXD_SDA_MOSI*/

						ISO78163_CLK/ SDIO0_D3/ DCMI_D4/ BSPI3_MISO/ EVENTOUT
175					P	VCAP, decouple by 0.1 uF capacitor
176					P	VDD, decouple by 0.1 uF capacitor
177	145	113	80	53	I/O	IOC12/ I2S1_SD/ FC5_RXD_SDA_MOSI*/ FC8_SCK*/ FC11_TXD_SCL_MISO*/ ISO78163_DAT/ SDIO0_CLK/ DCMI_D9/ BSPI3_CK/ EVENTOUT
178	146	114	81		I/O	IOD0/ CAN0_RX/ BSPI3_MOSI/

						EVENTOUT
179	147	115	82		I/O	IOD1/ CAN0_TX/ UART18_TX/ EVENTOUT
180	148	116	83	54	I/O	IOD2/ GTMR1_ETR/ FC11_RXD_SDA_MOSI*/ SDIO0_CMD/ DCMI_D11/ UART18_RX/ EVENTOUT
181	149	117	84		I/O	IOD3/ FC7_SDA_SSEL0*/ CAN0_TX1/ UART19_TX/ EVENTOUT
182	150	118	85		I/O	IOD4/ FC7_SCL_SSEL1*/ UART19_RX/ EVENTOUT

183	151	119	86		I/O	IOD5/ FC7_TXD_SCL_MISO*/ BSPI5_CS/ EVENTOUT
184	152	120			G	VSS
185	153	121			P	VDD, decouple by 0.1 uF capacitor
186	154	122	87		I/O	IOD6/ FC7_RXD_SDA_MOSI*/ BSPI5_CK/ EVENTOUT
187	155	123	88		I/O	IOD7/ FC7_SCK*/ BSPI5_MISO/ EVENTOUT
188	156	124			I/O	IOG9/ FC9_RXD_SDA_MOSI*/ BSPI5_MOSI/ EVENTOUT
189	157	125			I/O	IOG10/ FC9_SSEL2/ ENGY_CF0/

						EVENTOUT
190	158	126			I/O	IOG11/ FC9_SSEL3/ RMII0_TX_EN/ EVENTOUT
191	159	127			I/O	IOG12/ FC9_SCL_SSEL1*/ EVENTOUT
192	160	128			I/O	IOG13/ FC9_SDA_SSEL0*/ RMII0_TXD0/ EVENTOUT
193	161	129			I/O	IOG14/ FC9_TXD_SCL_MISO*/ RMII0_TXD1/ EVENTOUT
194	162	130			G	VSS
195	163	131			P	VDD, decouple by 0.1 uF capacitor
196	164	132			I/O	IOG15/ FC9_SDA_SSEL0*/ DCMI_D13/

						BPWM4/ EVENTOUT
197	165	133	89	55	I/O	IOB3/ I2S1_SCK*/ GTMR0_IO2/ FC3_SCK*/ FC5_SCK*/ BTMR4_7_EXT_CLK/ EVENTOUT
198	166	134	90	56	I/O	IOB4/ GTMR1_IO1/ FC3_TXD_SCL_MISO*/ FC5_TXD_SCL_MISO*/ BPWM5/ EVENTOUT
199	167	135	91	57	I/O	IOB5/ I2S1_SD/ GTMR1_IO2/ FC0_SSEL2/ FC3_RXD_SDA_MOSI*/ FC5_RXD_SDA_MOSI*/

						CAN1_RX/ RMDPPS_OUT0/ DCMI_D10/ ENGY_CF1/ EVENTOUT
200	168	136	92	58	I/O	IOB6/ GTMR2_IO1/ FC0_SCL_SSEL1*/ FC6_TXD_SCL_MISO*/ CAN1_TX/ DCMI_D5/ ENGY_CF2/ EVENTOUT
201	169	137	93	59	I/O	IOB7/ GTMR2_IO2/ FC0_SDA_SSEL0*/ FC6_RXD_SDA_MOSI*/ CAN1_TX1/ DCMI_VSYNC/ UART14_RX/ EVENTOUT

202	170	138	94	60	I/O	IOI12/ BOOT0
203	171	139	95	61	I/O	IOB8/ GTMR2_IO3/ FC0_SCL_SSEL1*/ CAN0_RX/ SDIO0_D4/ DCMI_D6/ UART14_TX/ EVENTOUT
204	172	140	96	62	I/O	IOB9/ I2S0_WS*/ GTMR2_IO4/ FC0_SDA_SSEL0*/ FC4_SDA_SSEL0*/ CAN0_TX/ SDIO0_D5/ DCMI_D7/ EVENTOUT
205	173	141	97		I/O	IOE0/ GTMR2_ETR/

Vangotech

						FC0_SCK/ DCMI_D2/ EVENTOUT
206	174	142	98		I/O	IOE1/ FC0_RXD_SDA_MOSI/ DCMI_D3/ EVENTOUT
207	175	143	99	63	G	VSS
208					G	AVSS
209					P	VCAP, decouple by 0.1 uF capacitor
210	176	144	100	64	P	AVDD, decouple by 0.1 uF capacitor
211					P	VDD, decouple by 0.1 uF capacitor
212	1	1	1		I/O	IOE2/ FC5_SSEL3/ FC11_RXD_SDA_MOSI*/ ISO78161_CLK/ RMDPPS_OUT1/ EVENTOUT
213	2	2	2		I/O	IOE3/ FC11_SDA_SSEL0/

						ISO78161_DAT/ EVENTOUT

Vangotech

6 Package Thermal Characteristics

For reliability and operability concerns, the absolute maximum junction temperature of V32F20X has to be below 125°C. The testing PCB is based on 4 layers. The following thermal resistance characteristics in Table 6-1 is based on JEDEC JESD51 standard, because the system design and temperature could be different with JEDEC JESD51, the simulating resulting data is a reference only, please prevail in the actual application condition test.

Table 6-1. V32F20X Thermal Resistance Characteristics

Symbol	Parameter	Min	Typ	Max	Unit
θ_{JA}	Junction-to-Ambient Thermal Resistance	-		-	°C/W
θ_{JB}（TBD）	Junction-to-Board Thermal Resistance	-		-	°C/W
θ_{JC}	Junction-to-Case Thermal Resistance	-		-	°C/W

(1). These values are based on a JEDEC-defined 2S2P system and will change based on environment as well as application.

(2). °C/W: degrees Celsius per watt.

Vangotech

7 Package Dimension

Figure 7-1 shows the top, bottom, and side views of 176-PIN package dimension.

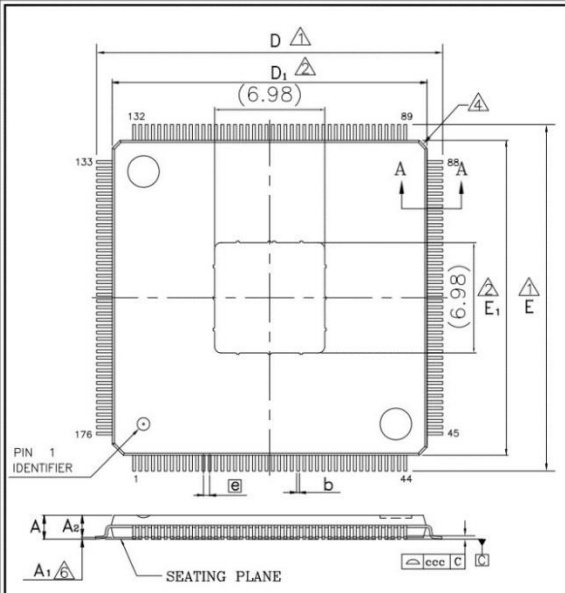

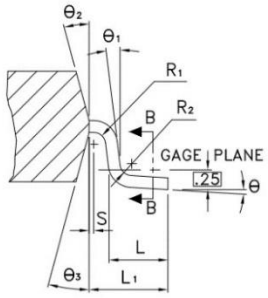

SECTION A–A

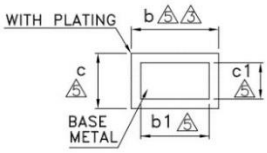

SECTION B–B

NOTE :

1. TO BE DETERMINED AT SEATING PLANE C.
2. DIMENSIONS D1 AND E1 DO NOT INCLUDE MOLD PROTRUSION. D1 AND E1 ARE MAXIMUM PLASTIC BODY SIZE DIMENSIONS INCLUDING MOLD MISMATCH.
3. DIMENSION b DOES NOT INCLUDE DAMBAR PROTRUSION. DAMBAR CAN NOT BE LOCATED ON THE LOWER RADIUS OR THE FOOT.
4. EXACT SHAPE OF EACH CORNER IS OPTIONAL.
5. THESE DIMENSIONS APPLY TO THE FLAT SECTION OF THE LEAD BETWEEN 0.10 mm AND 0.25 mm FROM THE LEAD TIP.
6. A1 IS DEFINED AS THE DISTANCE FROM THE SEATING PLANE TO THE LOWEST POINT OF THE PACKAGE BODY.
7. CONTROLLING DIMENSION : MILLIMETER.
8. REFERENCE DOCUMENT : JEDEC MS–026.
9. SPECIAL CHARACTERISTICS C CLASS: ccc

Symbol	Dimension in mm			Dimension in inch		
	Min	Nom	Max	Min	Nom	Max
A	—	—	1.60	—	—	0.063
A_1	0.025	—	0.127	0.001	—	0.005
A_2	1.35	1.40	1.45	0.053	0.055	0.057
b	0.13	0.18	0.23	0.005	0.007	0.009
b_1	0.13	0.16	0.19	0.005	0.006	0.007
c	0.09	0.14	0.20	0.004	0.006	0.008
c_1	0.09	0.12	0.16	0.004	0.005	0.006
D	21.85	22.00	22.15	0.860	0.866	0.872
D_1	19.90	20.00	20.10	0.783	0.787	0.791
E	21.85	22.00	22.15	0.860	0.866	0.872
E_1	19.90	20.00	20.10	0.783	0.787	0.791
e	0.40 BSC			0.016 BSC		
L	0.45	0.60	0.75	0.018	0.024	0.030
L_1	1.00 REF			0.039 REF		
R_1	0.08	—	—	0.003	—	—
R_2	0.08	—	—	0.003	—	—
S	0.20	—	—	0.008	—	—
θ	0°	3.5°	7°	0°	3.5°	7°
$θ_1$	0°	—	—	0°	—	—
$θ_2$	11°	12°	13°	11°	12°	13°
$θ_3$	11°	12°	13°	11°	12°	13°
ccc	0.08			0.003		

Figure 7-1 176-PIN Package Dimension

Figure 7-2 shows the top, bottom, and side views of 144-PIN package dimension.

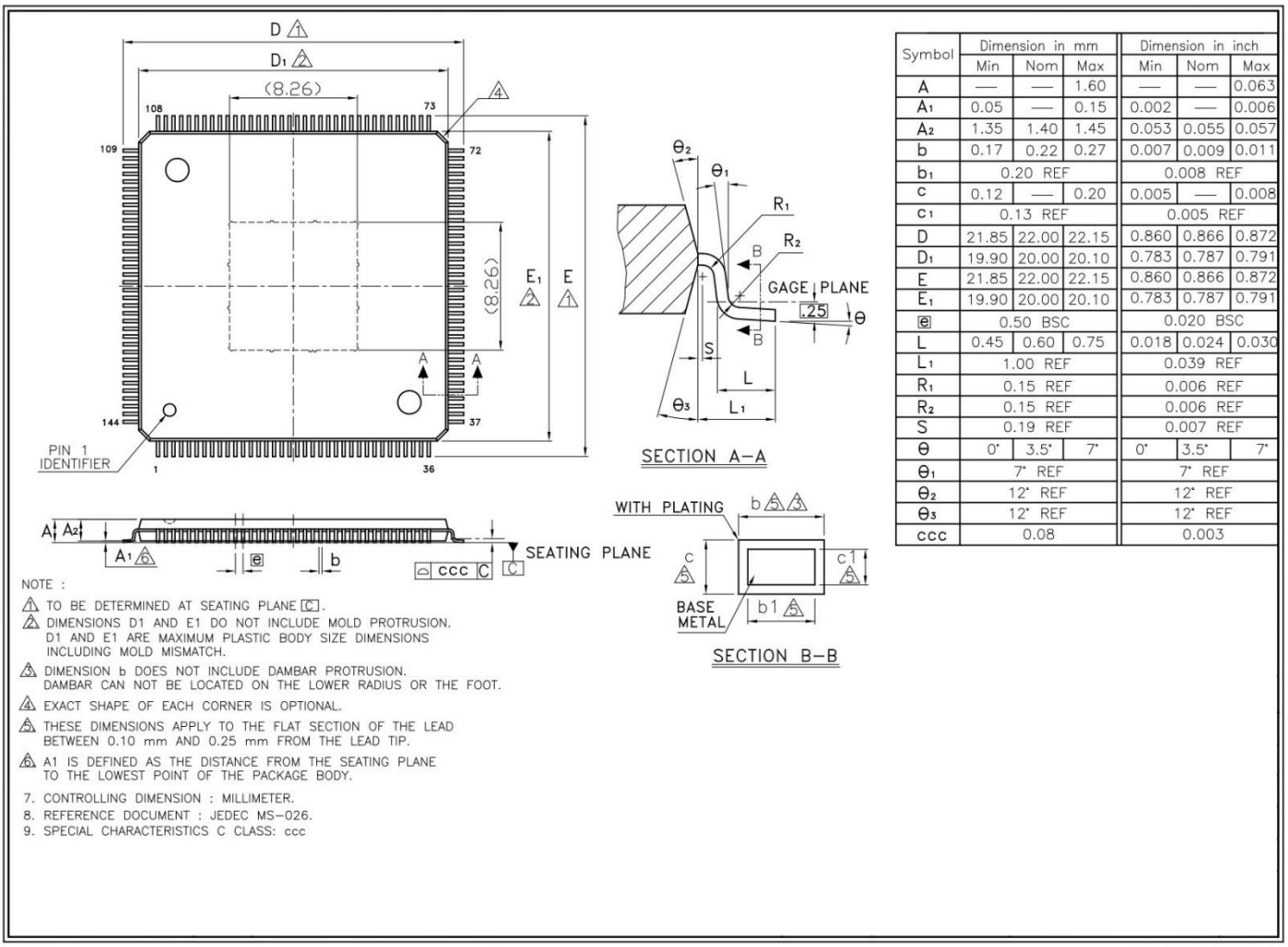

Symbol	Dimension in mm			Dimension in inch		
	Min	Nom	Max	Min	Nom	Max
A	—	—	1.60	—	—	0.063
A_1	0.05	—	0.15	0.002	—	0.006
A_2	1.35	1.40	1.45	0.053	0.055	0.057
b	0.17	0.22	0.27	0.007	0.009	0.011
b_1	0.20 REF			0.008 REF		
c	0.12	—	0.20	0.005	—	0.008
c_1	0.13 REF			0.005 REF		
D	21.85	22.00	22.15	0.860	0.866	0.872
D_1	19.90	20.00	20.10	0.783	0.787	0.791
E	21.85	22.00	22.15	0.860	0.866	0.872
E_1	19.90	20.00	20.10	0.783	0.787	0.791
e	0.50 BSC			0.020 BSC		
L	0.45	0.60	0.75	0.018	0.024	0.030
L_1	1.00 REF			0.039 REF		
R_1	0.15 REF			0.006 REF		
R_2	0.15 REF			0.006 REF		
S	0.19 REF			0.007 REF		
θ	0°	3.5°	7°	0°	3.5°	7°
$θ_1$	7° REF			7° REF		
$θ_2$	12° REF			12° REF		
$θ_3$	12° REF			12° REF		
ccc	0.08			0.003		

Figure 7-2 144-PIN Package Dimension

Figure 7-3 shows the top, bottom, and side views of 100-PIN package dimension.

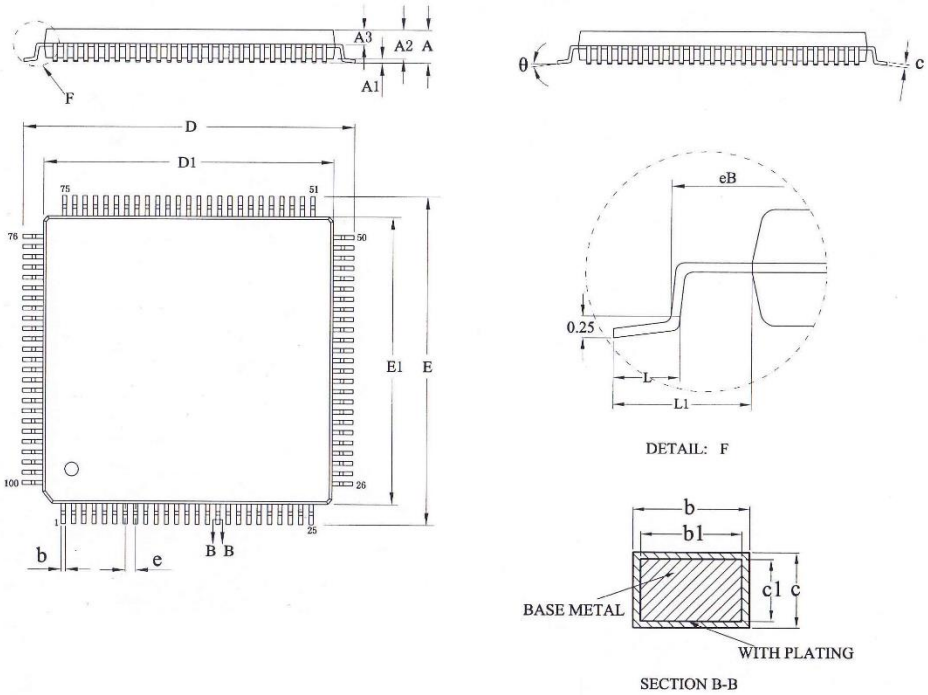

SYMBOL	MILLIMETER		
	MIN	NOM	MAX
A	—	—	1.60
A1	0.05	—	0.15
A2	1.35	1.40	1.45
A3	0.59	0.64	0.69
b	0.18	—	0.26
b1	0.17	0.20	0.23
c	0.13	—	0.17
c1	0.12	0.13	0.14
D	15.80	16.00	16.20
D1	13.90	14.00	14.10
E	15.80	16.00	16.20
E1	13.90	14.00	14.10
eB	15.05	—	15.35
e	0.50BSC		
L	0.45	—	0.75
L1	1.00REF		
θ	0	—	7°

Figure 7-3 100-PIN Package Dimension

Figure 7-4 shows the top, bottom, and side views of 64-PIN package dimension.

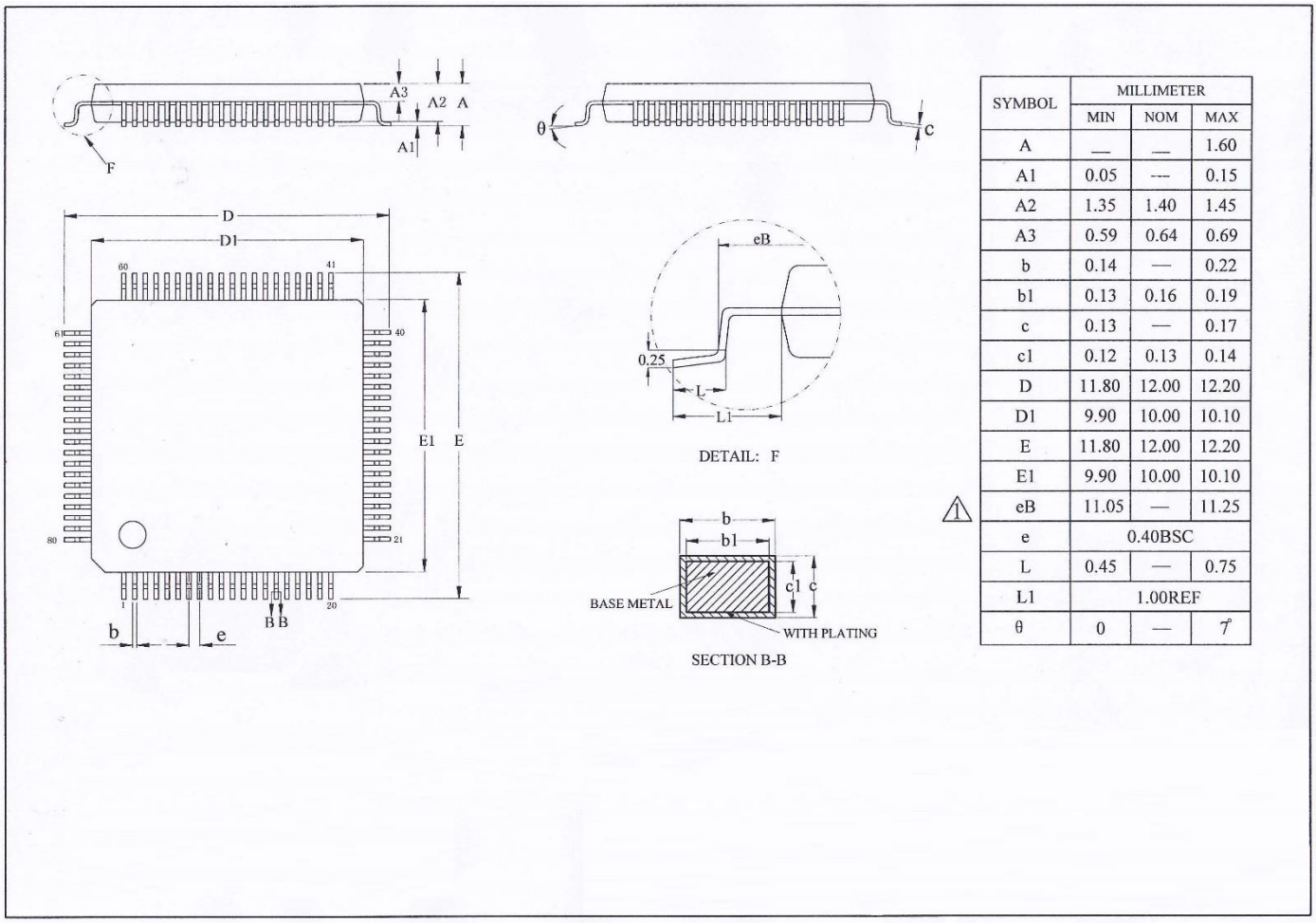

SYMBOL	MILLIMETER		
	MIN	NOM	MAX
A	—	—	1.60
A1	0.05	---	0.15
A2	1.35	1.40	1.45
A3	0.59	0.64	0.69
b	0.14	—	0.22
b1	0.13	0.16	0.19
c	0.13	—	0.17
c1	0.12	0.13	0.14
D	11.80	12.00	12.20
D1	9.90	10.00	10.10
E	11.80	12.00	12.20
E1	9.90	10.00	10.10
eB	11.05	—	11.25
e	0.40BSC		
L	0.45	—	0.75
L1	1.00REF		
θ	0	—	7°

Figure 7-4 64-PIN Package Dimension

8 Reflow Profile

All VANGO chips provided for clients are lead-free RoHS-compliant products.

The reflow profile recommended in this document is a lead-free reflow profile that is suitable for pure lead-free technology of lead-free solder paste. If customers need to use lead solder paste, please contact with VANGO FAE.

The lead-free reflow profile conditions are given in Table 8-1. The table is for reference only.

Table 8-1. Lead-free Reflow Profile Conditions

	QTI typical SMT reflow profile conditions(for reference only)	
	Step	Reflow condition
Environment	N2 purge reflow usage (yes/no)	Yes, N2 purge used
	If yes, O2 ppm level	O2 < 1500 ppm
A	Preheat ramp up temperature range	25°C -> 150°C
B	Preheat ramp up rate	1.5~2.5 °C /sec
C	Soak temperature range	150°C -> 190°C
D	Soak time	80~110 sec
E	Liquidus temperature	217°C
F	Time above liquidus	60-90 sec
G	Peak temperature	240-250°C
H	Cool down temperature rate	≤4°C /sec

Figure 8-1 shows the typical lead-free reflow profile.

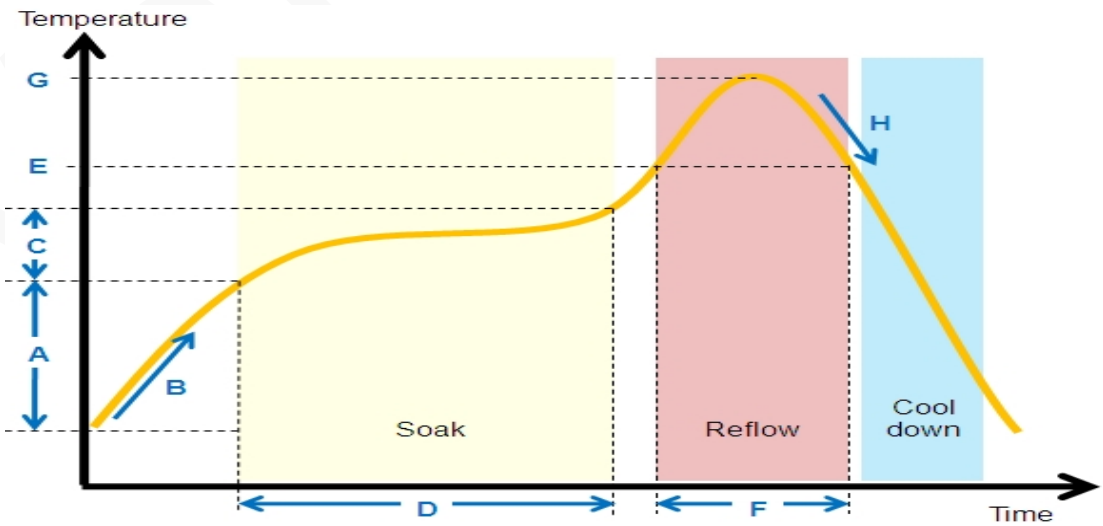

Figure 8-1 Typical Lead-free Reflow Profile

NOTE

The above reflow profile is solder joint testing result, it is for reference only, please adjust depending

on actual production conditions.

The method of measuring the reflow soldering process is as follows.

Fix the thermocouple probe of the temperature measuring line at the connection point between the pin (solderable end) of the packaged device and the pad by using high-temperature solder wire or high-temperature tape, fix the packaged device at the pad by using high-temperature tape or other methods, and cover over the thermocouple probe. See Figure 8-2.

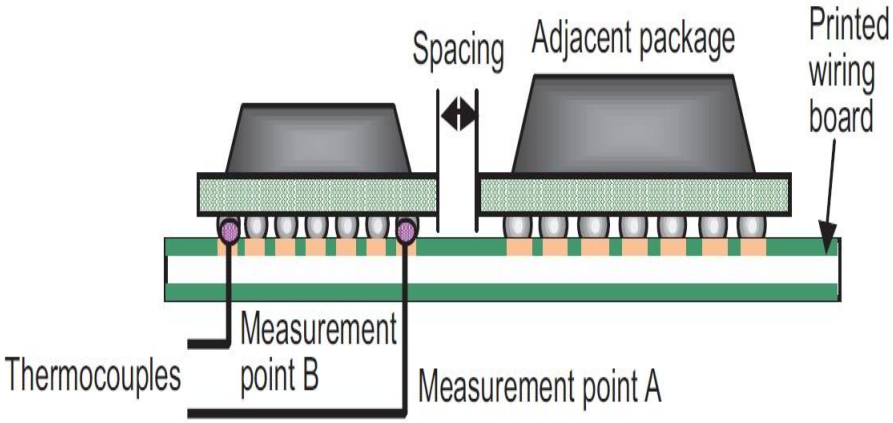

Figure 8-2 Measuring the Reflow Soldering Process

NOTE

To measure the temperature of QFP-packaged chip, place the temperature probe directly at the pin. If possible, the more accurate measuring way is to drill the packaged device, or drill the PCB, and fix the thermocouple probe through the drilled hole at the pad.

9 Part Marking

Figure 9-1 shows the V32F207ZGT61A marking.

Figure 9-1 V32F207ZGT61A Marking

Table 9-1 describes the marking definitions.

Table 9-1. Marking Definitions

NO.	Marking	Description	Fixed/Dynamic
1	Vango	Logo	
2	V32F207ZGT61A	Part number	
3	LLLLLLLLL	Wafer lot ID	
4	YYWW	Date code	

10 Ordering information

V32 F 207 I G T 6 1 A

Device family

V32 = Arm-based 32-bit microcontroller

Product type

F = General purpose
H = High performance

Device subfamily

205/207 = Cortex-M33 core
208 = Dual Cortex-M33 cores
209 = Dual Cortex-M33 + Cortex-M0 cores

Pin count

R = 64 pins
V = 100 pins
Z = 144 pins
I = 176 pins

Flash memory size

Z = 192 Kbytes of Flash memory
E = 512 Kbytes of Flash memory
G = 1024 Kbytes of Flash memory
H = 1536 Kbytes of Flash memory
I = 2048 Kbytes of Flash memory
C = 256 Kbytes of Flash memory
F = 768 Kbytes of Flash memory
Y = 1280 Kbytes of Flash memory
X = 1792 Kbytes of Flash memory
W = 2304 Kbytes of Flash memory

Package

T = LQFP
H = LFBGA/TFBGA

Temperature range

6/A = Industrial temperature range, –40 to 85 °C.
7/B = Industrial temperature range, –40 to 105 °C.

Core Number

Internal core number

Chip Version

A = Initial Version

Figure 10-1 Ordering information

Vangotech