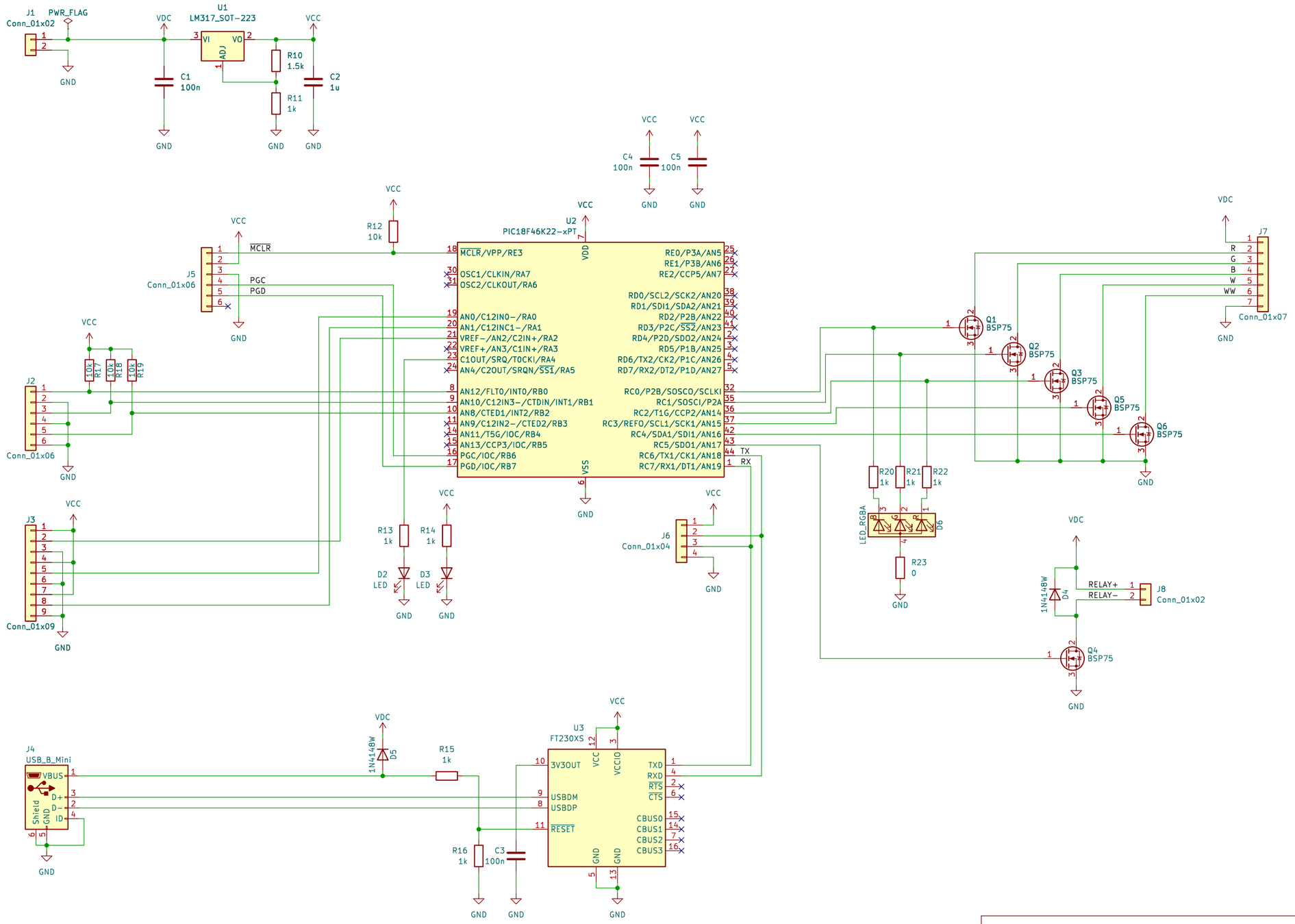

Little light controller board

Made by cazaugg

Sheet: /

File: little-chef.kicad_sch

Title: little-chef

Size: A3	Date: 04. July 2022	**Rev: 1.0.0**
KiCad E.D.A. kicad 7.0.10		Id: 1/1