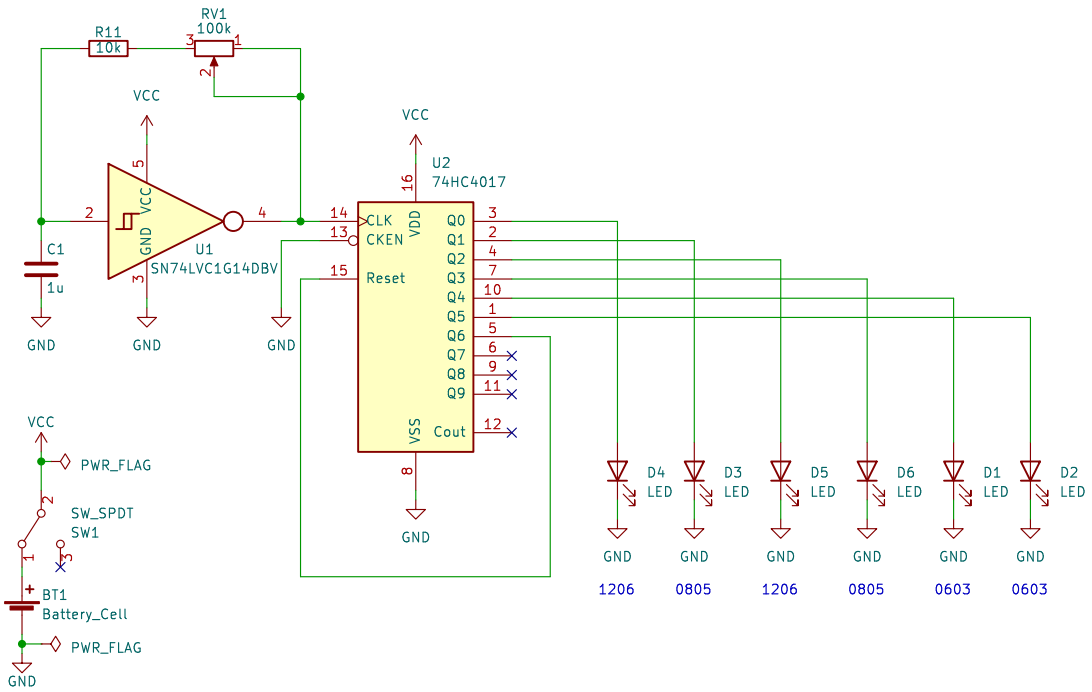

H1
MountingHole

SMD – Challenge Badge
Moser Baer Branding
SMD Soldering from 1206 to 0603 Chip Sizes
Made for Avanti 2023
(c) by C. Zaugg

Sheet: /
File: SMD–Challenge–Avanti.kicad_sch

Title: SMD–Challenge–Avanti

Size: A4	Date: 2023–01–30	**Rev: v2.0.0**
KiCad E.D.A. kicad (7.0.0)		Id: 1/1