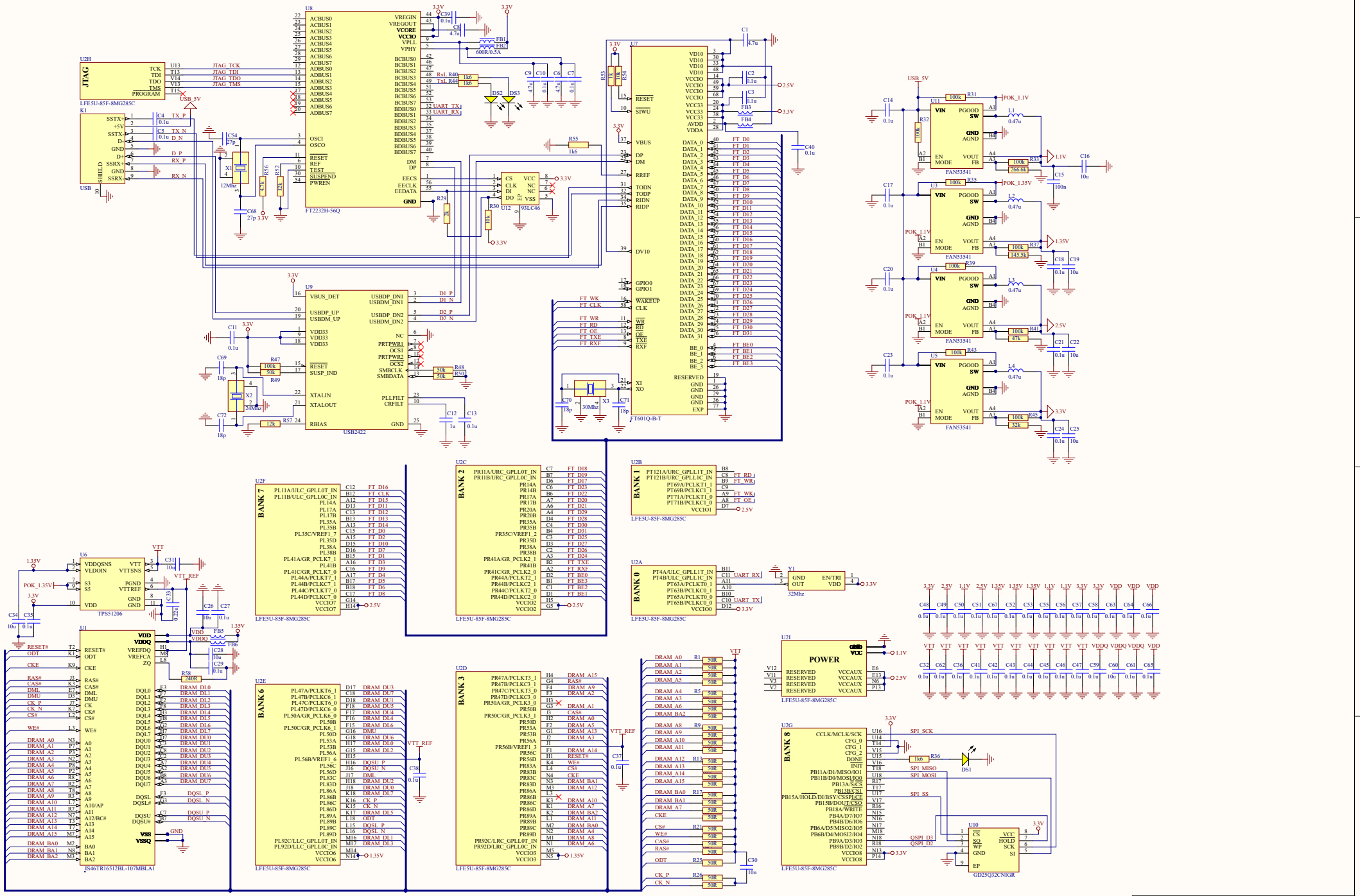
U8
FT2232H-56Q
U7
FT601Q-B-T
U9
USB2422
U2H
JTAG
LFE5U-85F-8MG285C
K1
USB
U11
U3
U4
U5
FAN53541
U12
93LC46
U2F
BANK 7
U2C
BANK 2
U2B
BANK 1
U2A
BANK 0
U6
TPS51206
U1
JS46TR16512BL-107MBLA1
U2E
BANK 6
U2D
BANK 3
U21
POWER
U2G
BANK 8
U10
GD25Q32CNIGR
Y1
32Mhz
X1
12Mhz
X2
24Mhz
X3
30Mhz
DS1
DS2
DS3
USB_5V
POK_1.1V
POK_1.35V
1.1V
1.35V
2.5V
3.3V
VTT
VTT_REF
Title
EVEREST (E - Versatile Research Stick)
Size
A2
Number
#1 of #1
Revision
1.0
Date:
2/4/2020
Sheet
of
File:
e-VEREST.SchDoc
Drawn By:
Cristian Balint