片烟卫士烟芯温度传感器原理图

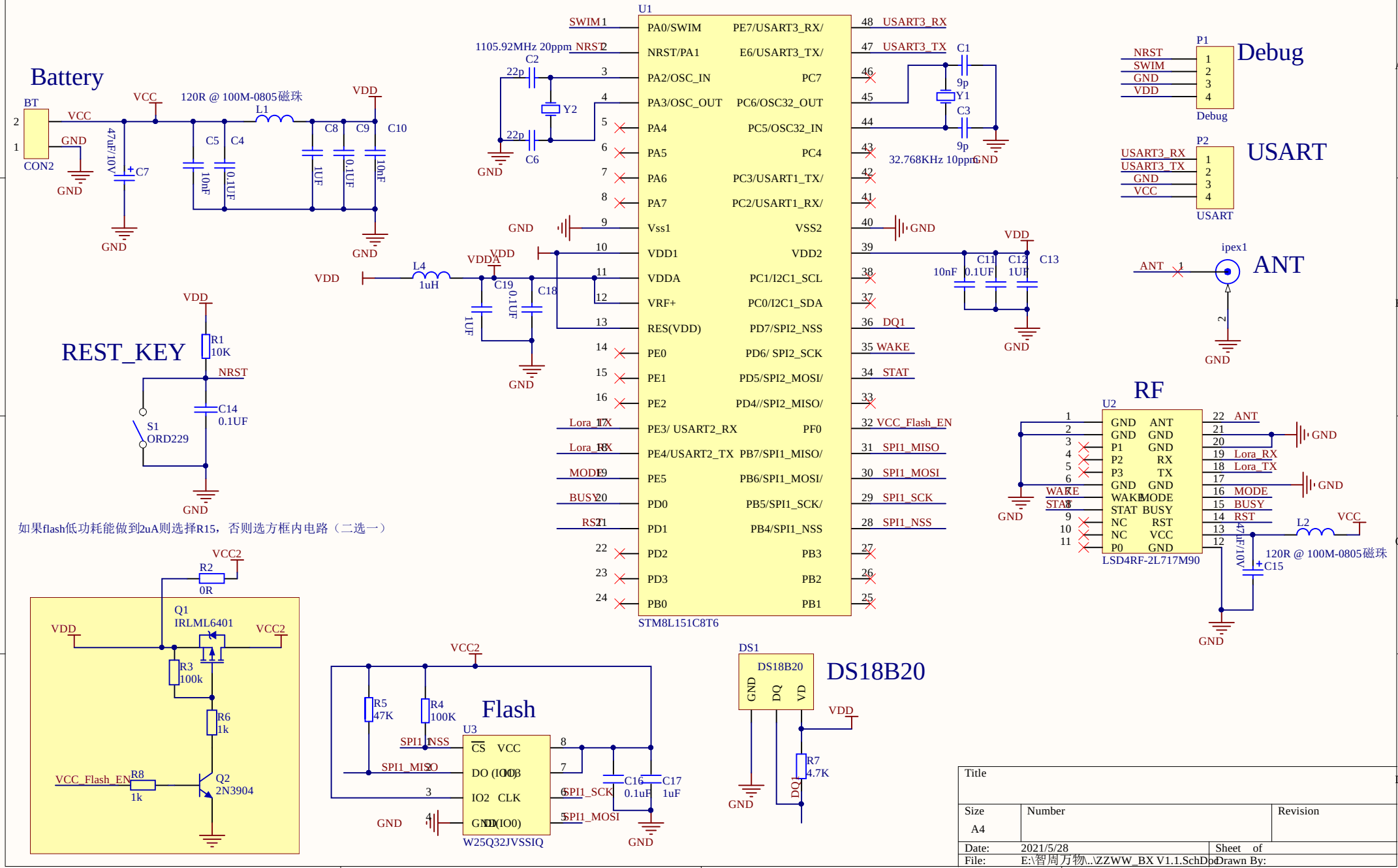

Title		
Size A4	Number	Revision
Date: 2021/5/28	Sheet of	
File: E:\智周万物\..\ZZWW_BX V1.1.SchDoc	Drawn By:	