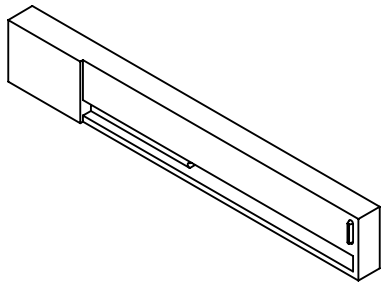

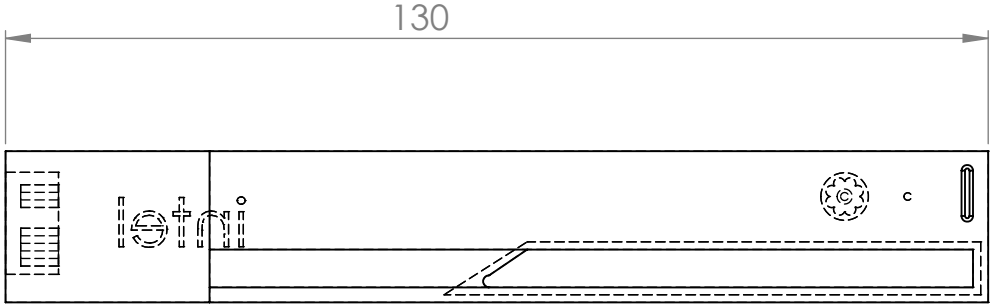

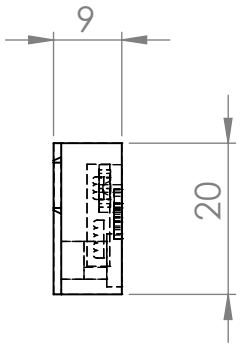

Concordia	MATERIAL -		SURFACE ROUGHNESS √	TITLE **Intel real sense camera R200**			
	FINISH -		TOLERANCES X ± .1 .X ± .05 .XX ± .005 .XXX ± .002 ANGLE ± .5°				
PROPRIETARY INFORMATION NOT TO BE RELEASED WITHOUT WRITTEN AUTHORIZATION FROM CONCORDIA UNIVERSITY	DESIGNER **ONLINE**	ALL DIMENSIONS IN **METRIC** UNLESS OTHERWISE SPECIFIED	UNLESS OTHERWISE SPECIFIED	A SIZE	DATE **11/13/2017**	USED ON	**MECH 490**
	DRAFTER **ONLINE**	APPROVED	SCALE **1:1**	SHEET **1 / 1**	DWG NO. **MM#939143**	REV NO.	**01**