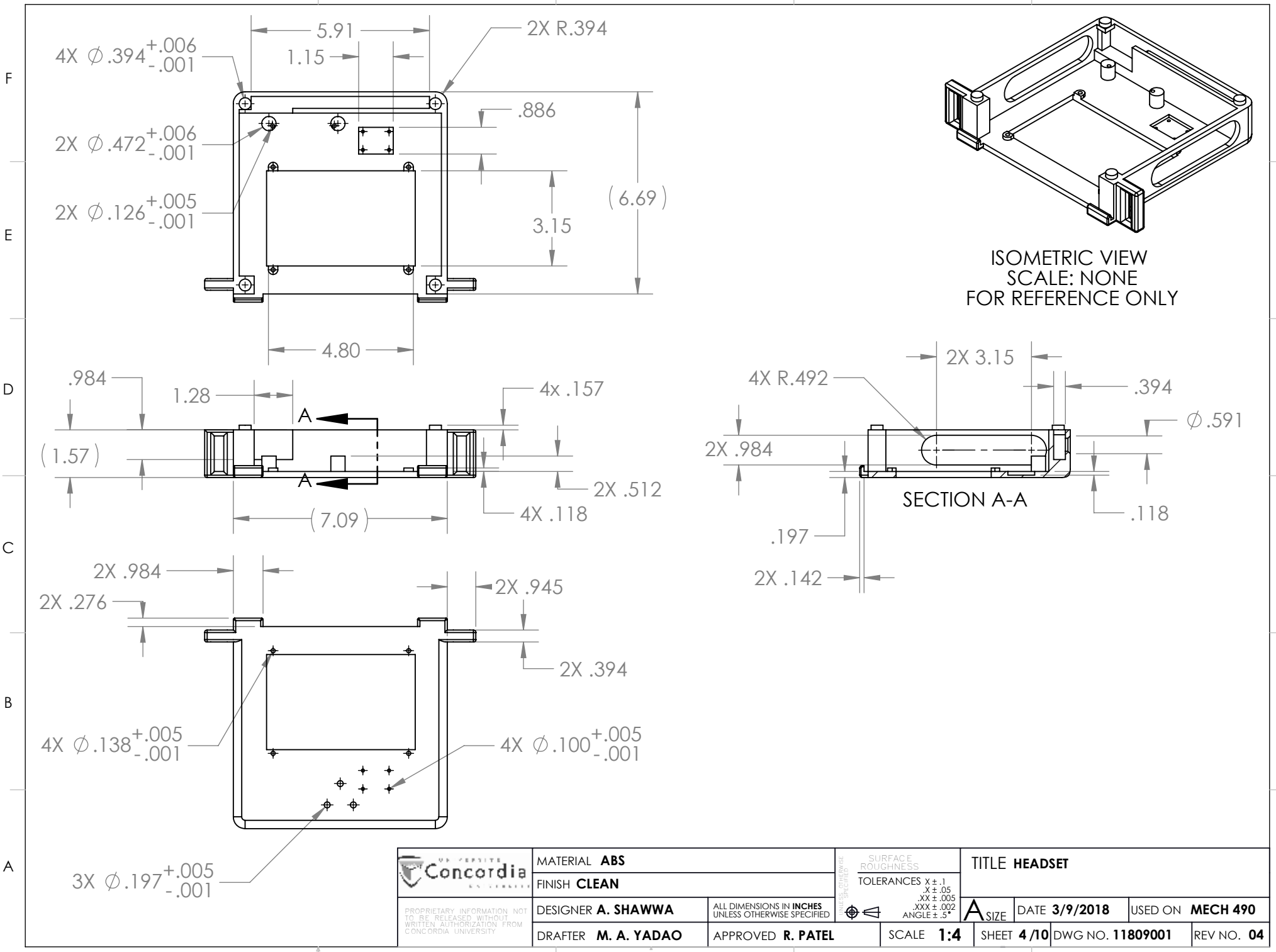
5.91
1.15
2X R.394
4X ∅.394 +.006 -.001
.886
2X ∅.472 +.006 -.001
2X ∅.126 +.005 -.001
(6.69)
3.15
4.80
ISOMETRIC VIEW
SCALE: NONE
FOR REFERENCE ONLY
.984
1.28
4x .157
A
A
(1.57)
2X .512
4X .118
(7.09)
2X 3.15
4X R.492
.394
∅.591
2X .984
SECTION A-A
.118
.197
2X .142
2X .984
2X .276
2X .945
2X .394
4X ∅.138 +.005 -.001
4X ∅.100 +.005 -.001
3X ∅.197 +.005 -.001
Concordia
MATERIAL ABS
FINISH CLEAN
DESIGNER A. SHAWWA
DRAFTER M. A. YADAO
ALL DIMENSIONS IN INCHES UNLESS OTHERWISE SPECIFIED
APPROVED R. PATEL
SURFACE ROUGHNESS
TOLERANCES X ± .1 .X ± .05 .XX ± .005 .XXX ± .002 ANGLE ± .5°
SCALE 1:4
TITLE HEADSET
A SIZE
DATE 3/9/2018
USED ON MECH 490
SHEET 4 /10
DWG NO. 11809001
REV NO. 04
PROPRIETARY INFORMATION NOT TO BE RELEASED WITHOUT WRITTEN AUTHORIZATION FROM CONCORDIA UNIVERSITY