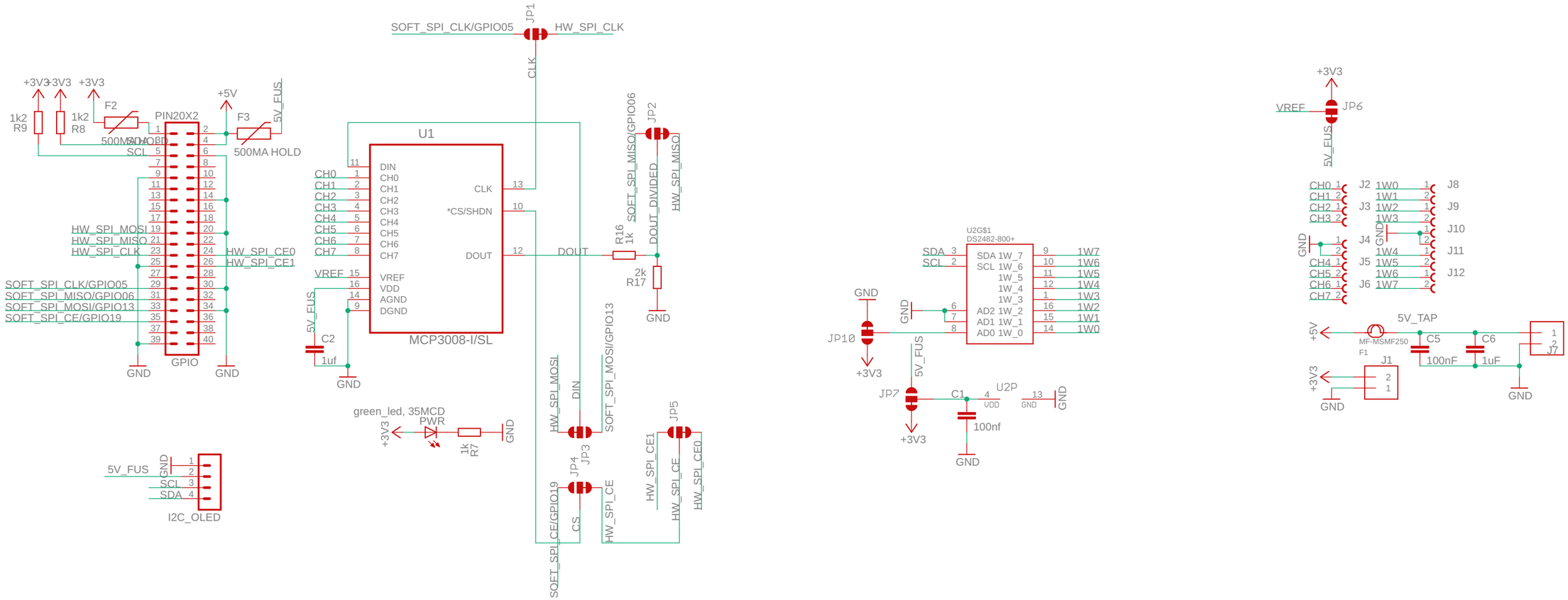

Drawn by: Chris Burgess	
Checked by:	1wire_12bit_adc_hat_with_oled v30
	6/8/2019 10:46 AM
BurgessWorld Custom Electronics	Sheet: 1/1 v0.1