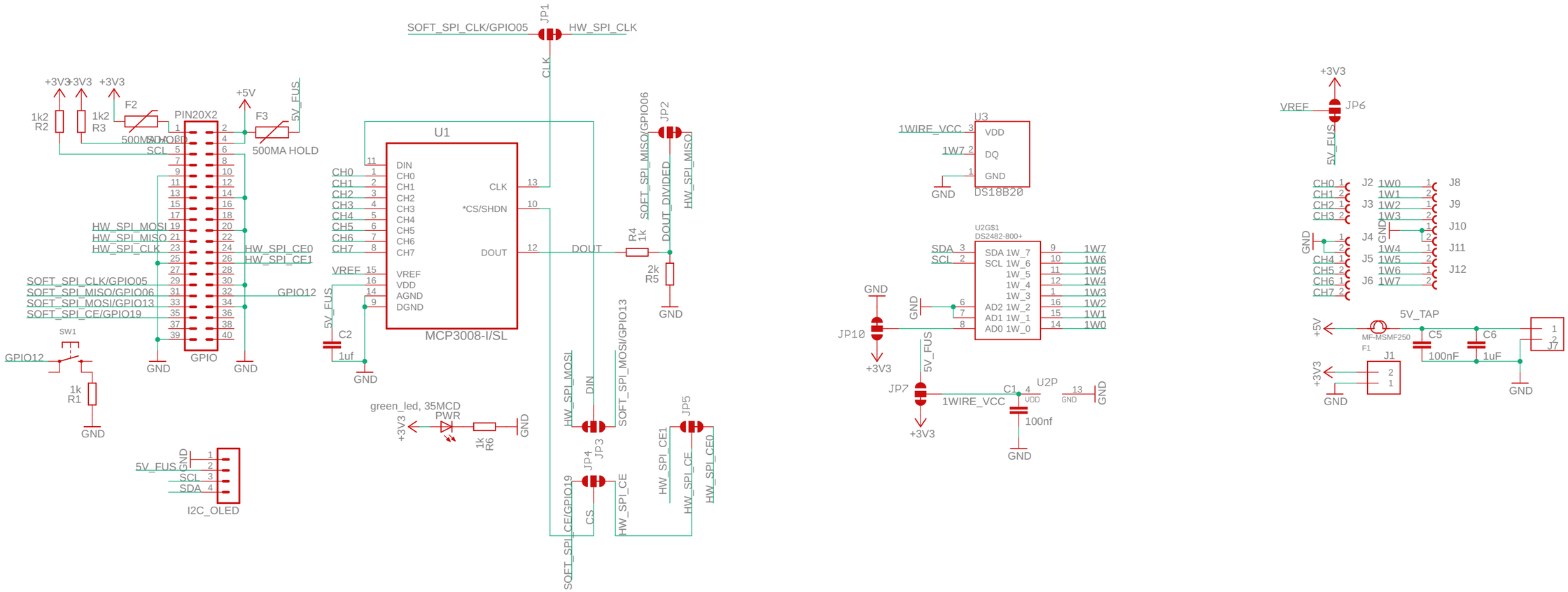

Drawn by: Chris Burgess	
Checked by:	1wire_12bit_adc_hat_with_oled v31
	6/23/2019 3:57 PM
BurgessWorld Custom Electronics	Sheet: 1/1 v0.1