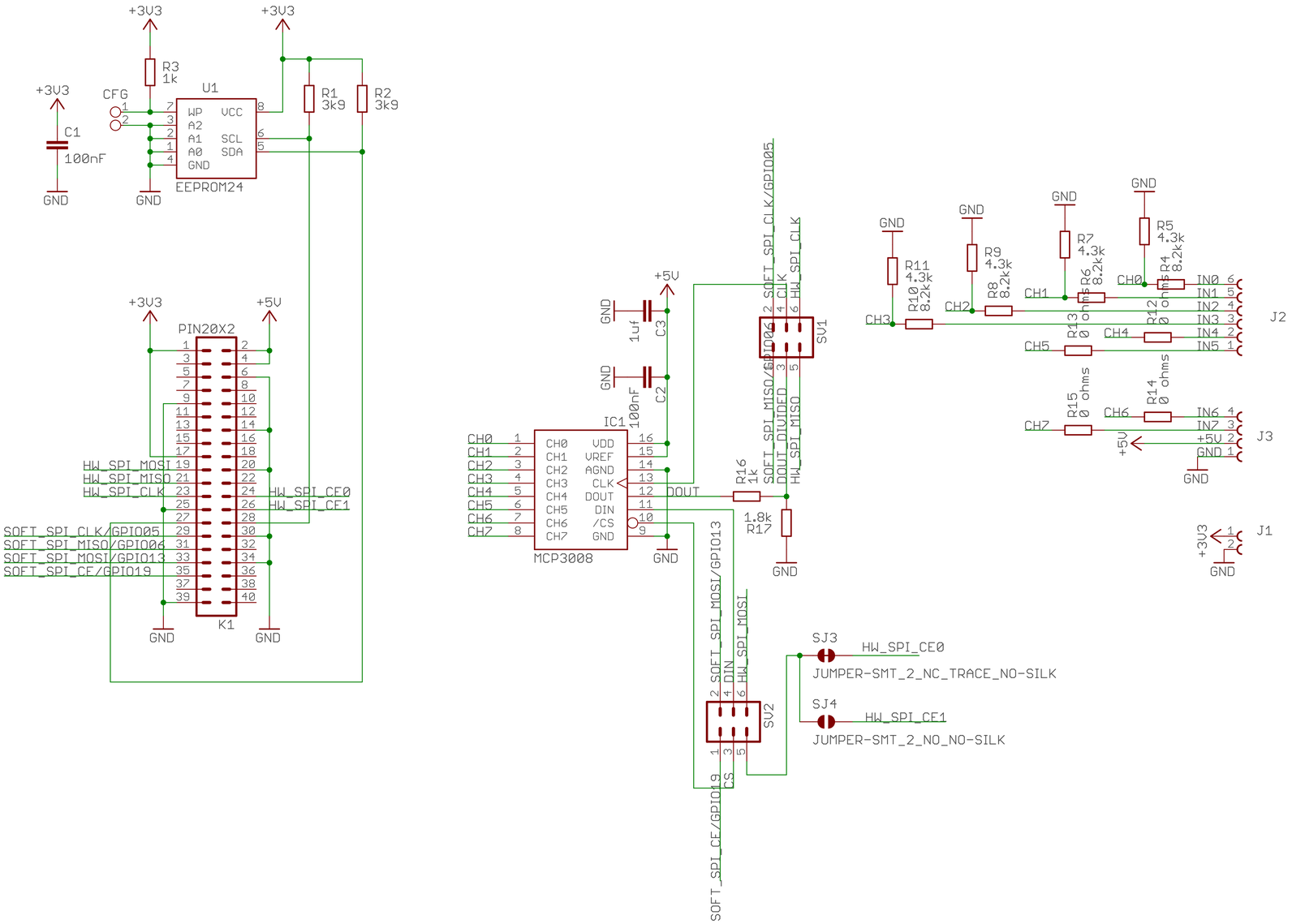

Drawn by: C. BURGESS	
Checked by:	RasPi-ADC_HAT v10
	9/19/2017 10:37 AM
BURGESSWORLD CUSTOM ELEC.	Sheet: 1/1 v0.1