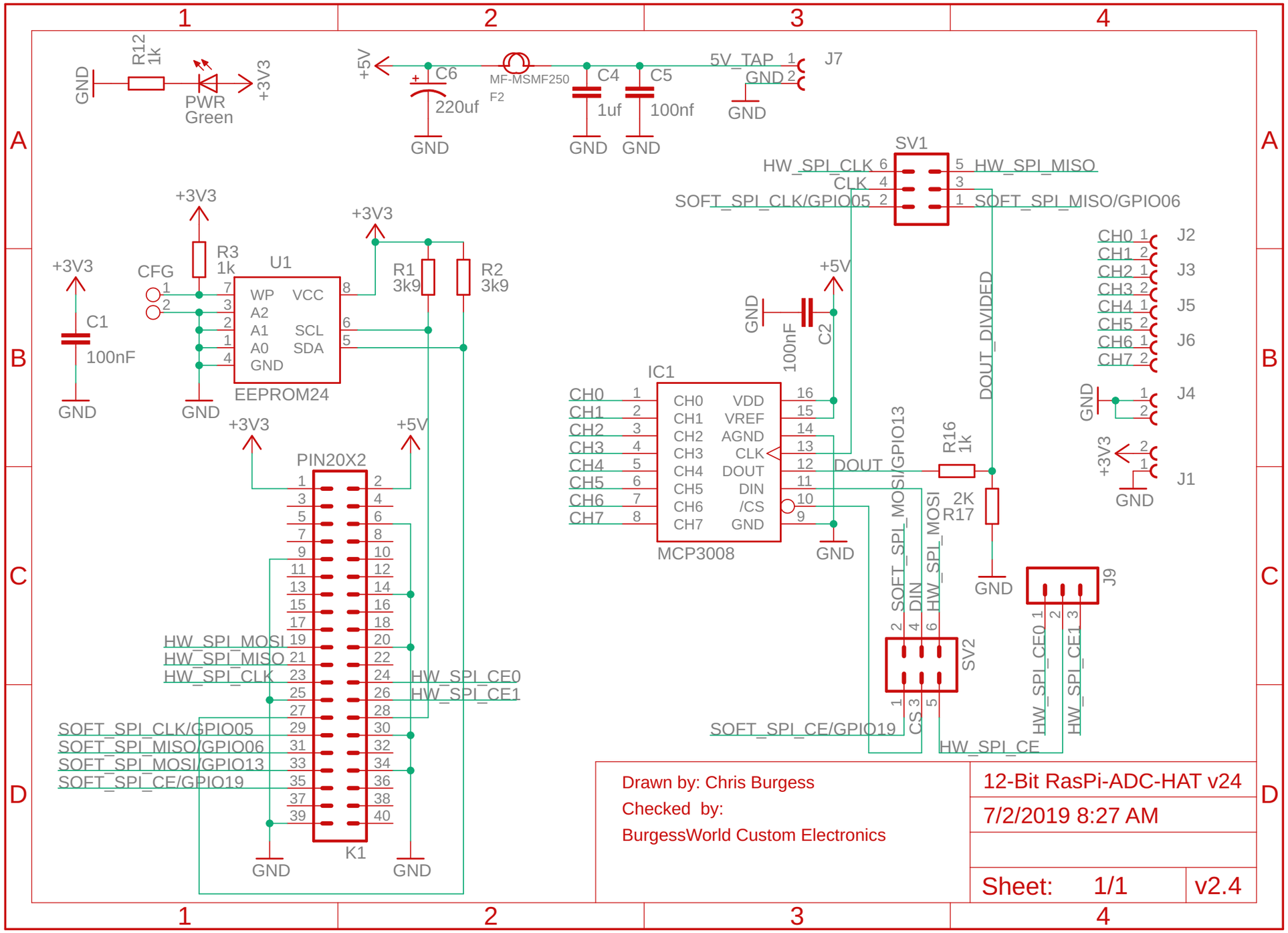

Drawn by: Chris Burgess
Checked by:
BurgessWorld Custom Electronics

12-Bit RasPi-ADC-HAT v24
7/2/2019 8:27 AM
Sheet: 1/1
v2.4