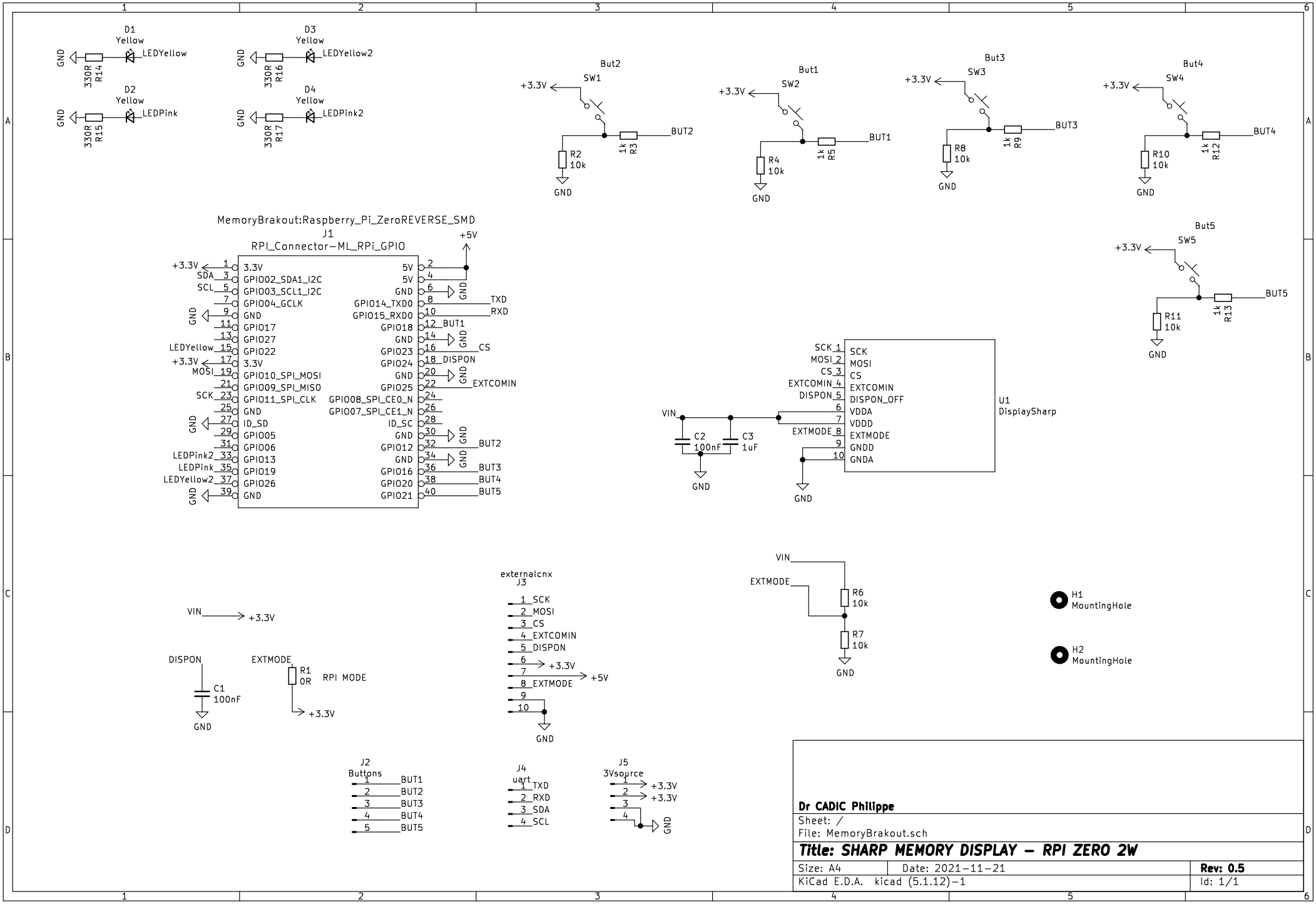

Dr CADIC Philippe

Sheet: /

File: MemoryBrakout.sch

Title: SHARP MEMORY DISPLAY - RPI ZERO 2W

Size: A4	Date: 2021-11-21	**Rev: 0.5**
KiCad E.D.A. kicad (5.1.12)-1		Id: 1/1