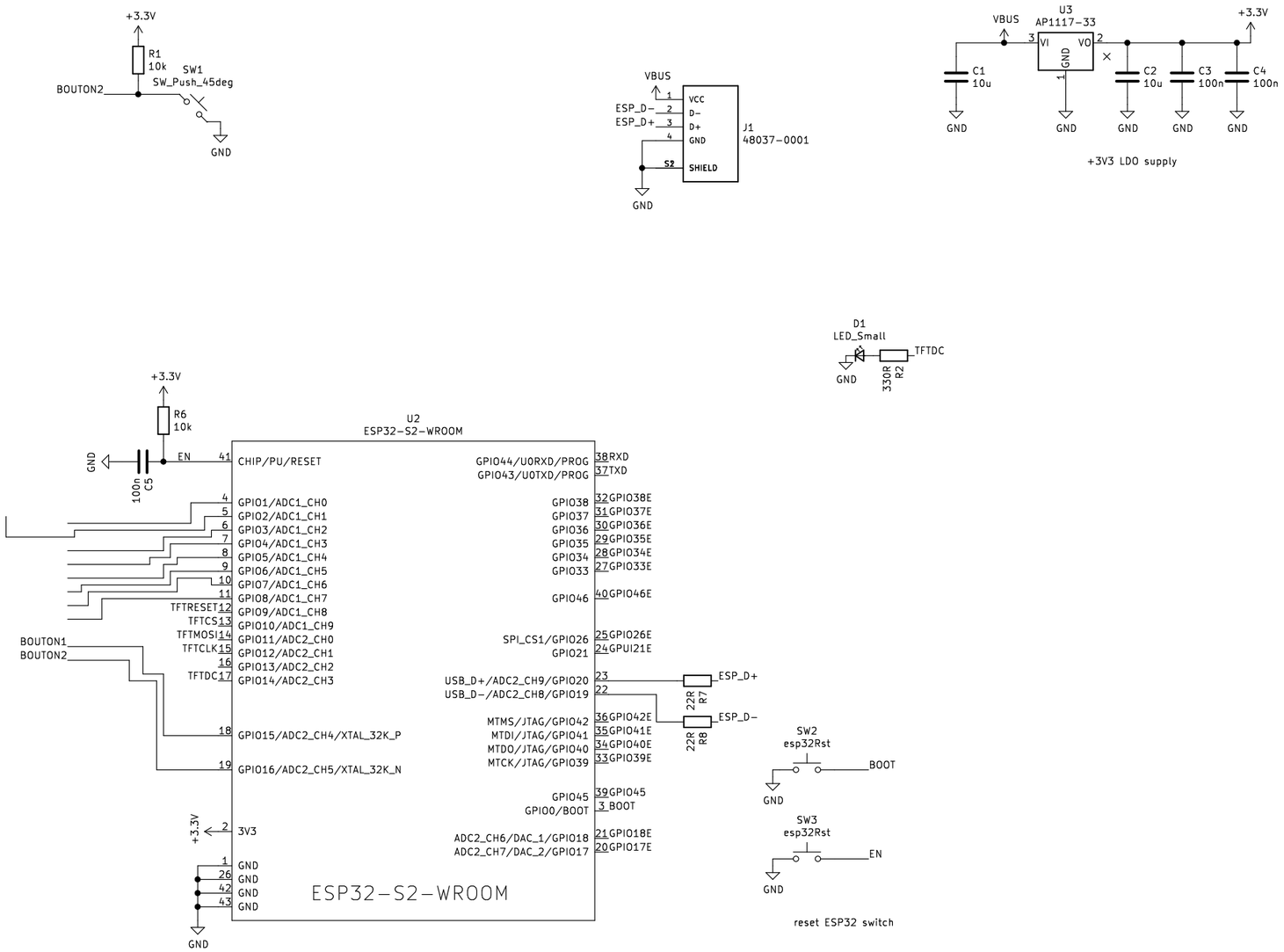

@sulfuroid
Dr CADIC Philippe
www.morpheans.com

Sheet: /
File: 20210211_eduino.sch

Title: USPS2-Dongle

Size: A3	Date: 2021-10-09	**Rev: 0.1**
KiCad E.D.A. kicad (5.1.9)-1		Id: 1/1