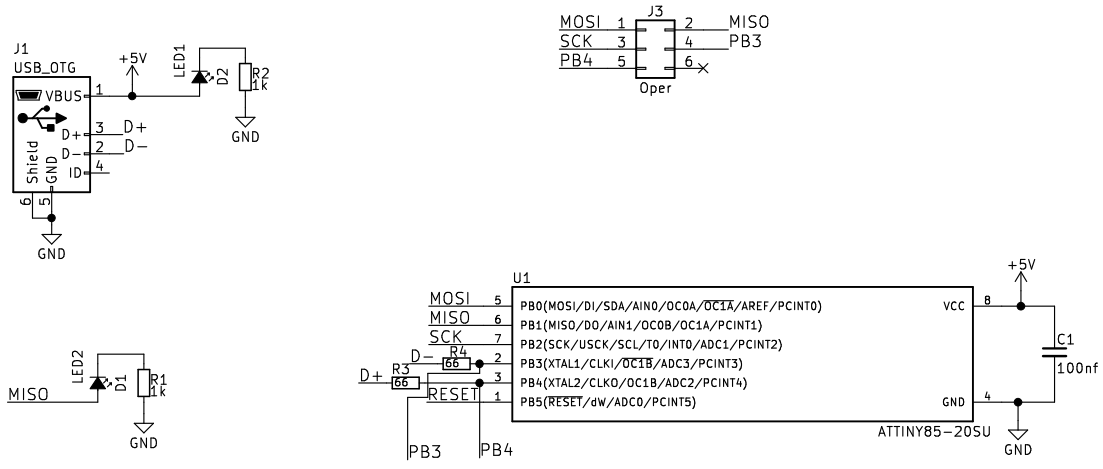

Pin	Connection
1	PB0/MOSI
2	PB1/MISO
3	PB2/SCK/AD1
4	PB3/AD3 // (D-)*
5	PB4/AD2 // (D+)*
6	PB5/nRES

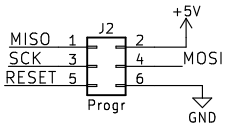

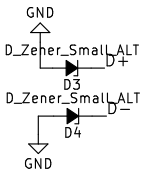

Version beta

Dr CADIC Philippe

Sheet: /

File: attiny85.sch

Title: PCB AT Tiny 85

Size: A4	Date: 2019-04-17	**Rev: Projet Programmez.com**
KiCad E.D.A. kicad 4.0.7		Id: 1/1