MODEL NO. : LX395A4003

ISSUED DATE: 2019-03-08

VERSION : Ver 1.0

☐Preliminary Specification
■Final Product Specification

CUSTOMER:

Approved by	Notes

LIANXUN:

PREPARED	CHECKED	APPROVED

Shenzhen LianXun Optronics Co.,Ltd
ADD: F5, Building 8B, XiangJiang Industrial Park, YingRenShi Community,
Shiyan Town, Shenzhen 518109, China.
深圳市宝安区石岩镇应人石社区湘江工业园 8B 栋 5 楼
Tel: 86-755-23155803 Fax: 86-755-29468750
www.lxdisplay.com

REVISION RECORD

Rev. NO.	Rev. Date	Description	Remarks
1.0	2019-03-08	First Release	

TABLE OF CONTENT

1. GENERAL SPECIFICATIONS ……..……..P3

2. ABSOLUTE MAXIMUM RATING ……..……..P4

3. ELECTRICAL CHARACTERISTICS…….……P4

4. BACKLIGHT CHARACTERISTICS…….……...P4

5. DIMENSIONAL DRAWING …….……...……...……..P5

6. INTERFACE PIN CONECTIONS …..…….……...P6

7. BLOCK DIAGRAM OF LCM……..……P7

8. OPTICAL CHARACTERISTICS……..……...……...P8

9. INSPECTION CRITERION……..…… ……..P11

10. RELIABILITY AND INSPECTION STANDARD…..……...P15

11. PRECAUTIONS FOR USING LCD MODULE……..…… ……P16

1. General Specifications

LX395A4003 is a color active matrix LCD module incorporating amorphous silicon TFT (Thin Film Transistor). It is composed of a color TFT-LCD panel, driver IC, FPC， and a back light unit. The module display area contains 480x 480pixels. This product accords with RoHS environmental criterion.

Item	Display Panel	Remark
Size	3.95 inch	/
Display Mode	Normally Black, Transmissive LCD	/
Viewing Direction	Free View	/
Module area(W x H x T)	74.83 x 78.98 x 2.10	mm
Active Area(W x H)	71.856 x 70.176	mm
Number of Dots	480RGB x 480	/
Pixel Pitch(W x H)	0.149 x 0.146	mm
Colors	16.7M	/
Drive IC	ST7701S	/
Backlight Type	4 Serial*2 LED	/
Interface Type	3 SPI 9b(rise) + RGB	/
Input voltage	3.3	V

2. ABSOLUTE MAXIMUM RATINGS

Parameter	Symbol	Min	Max	Unit
Logic Supply Voltage	IOVCC	-0.3	4.6	**V**
Analog Supply Voltage	VCC	-0.3	4.6	**V**
Operating temperature	Top	-20	70	℃
Storage temperature	Tst	-30	80	℃
Humidity	RH	--	90%(Max60C)	RH

3. ELECTRICAL CHARACTERISTICS

Parameter	Symbol	Min	Typ	Max	Unit
Logic Supply Voltage	IOVCC	-	-	-	V
Analog Supply Voltage	VCC	2.6	3.3	3.6	
Input Current	Idd	-	30	-	mA

4. BACKLIGHT CHARACTERISTICS

Item	Symbol	Min	Typ	Max	Unit	Condition
Forward Voltage	Vf	--	12.4	--	V	--
Forward Current	If	--	40	-	mA	--
Operating Life Time	--	--	20000	--	Hrs	

Note 1: The LED Supply Voltage is defined by the number of LED at Ta=25℃

Note 2: Operating life means brightness goes down to 50% initial brightness. Typical operating life time is estimated data..

5. DIMENSIONAL DRAWING

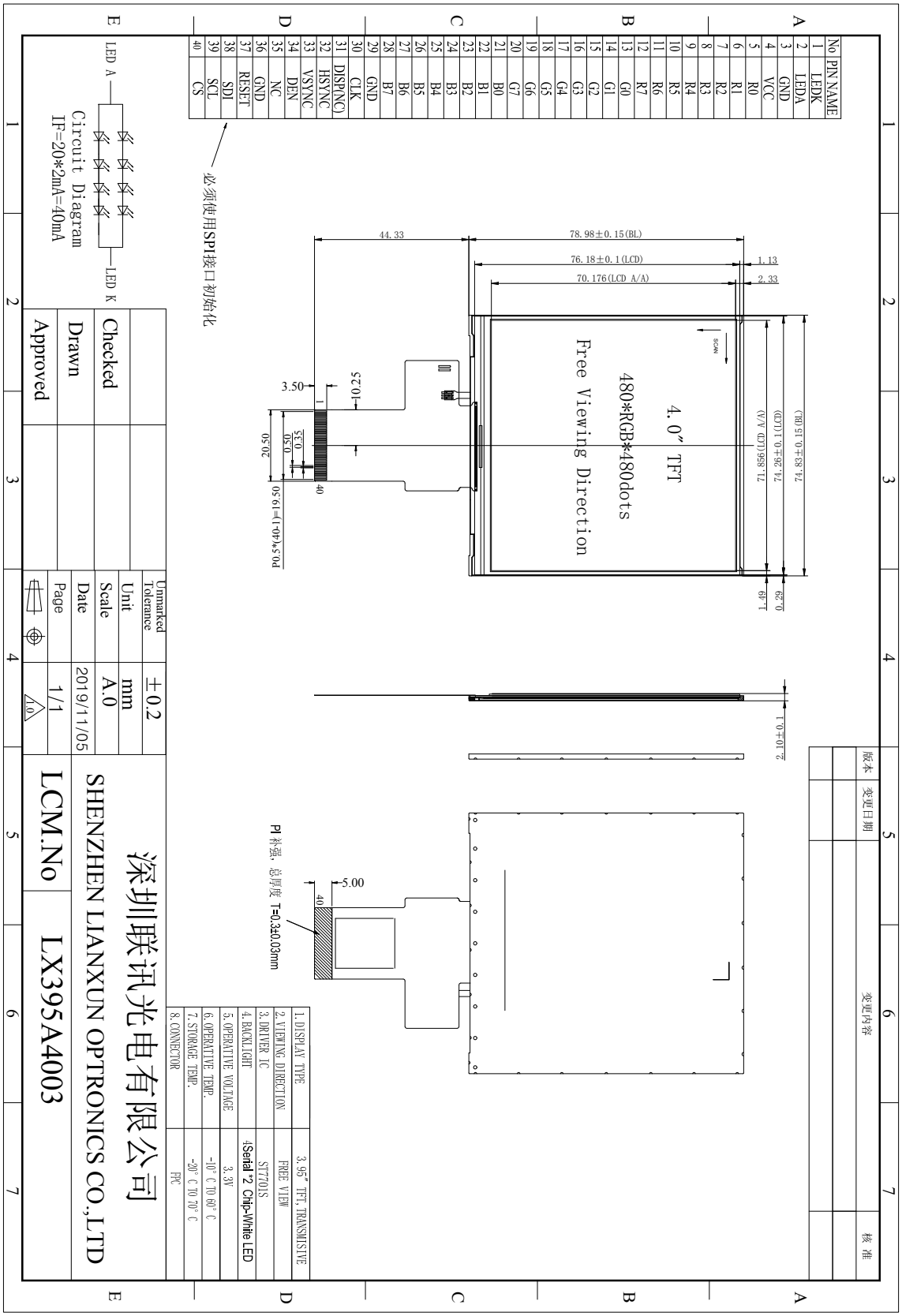

6. INTERFACE PIN CONNECTIONS

Pin.No	Symbol	Function
1	LEDK	back light power supply negative
2	LEDA	back light power supply positive
3	GND	Ground
4	VCC	Power supply
5-12	R0-R7	Red Data
13-20	G0-G7	Green Data
21-28	B0-B7	Blue Data
29	GND	Ground
30	DCLK	Clock signal
31	DISP(NC)	NC
32	HSYNC	Horizontal sync input in RGB mode(short to GND if not used)
33	VSYNC	Vertical sync input in RGB mode(short to GND if not used)
34	DE	Data enable.
35	NC	No Connection
36	GND	Ground
37	RESET	- The external reset input
38	SDI	Serial data input/output bidirectional pin for SPI Interface.
39	SCL	Serial clock input for SPI interface.
40	CS	A chip select signal

NOTE : Interface Mode for SPI: 3-Line 9b SPI(rise)
IM3=1, IM2=0, IM1=1, IM0=0

7. BLOCK DIAGRAM OF LCM

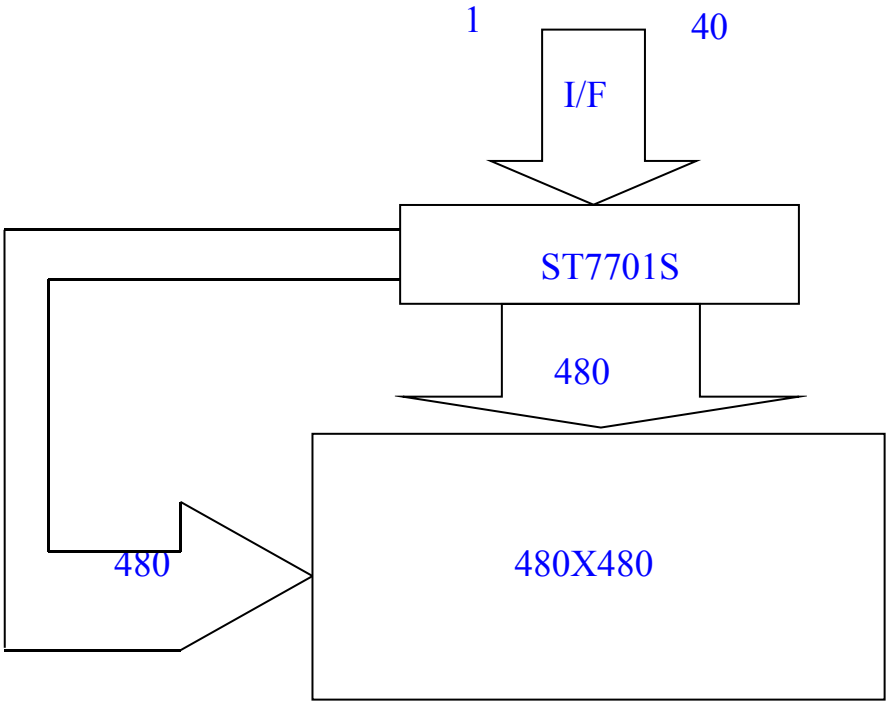

8. ELECTRO-OPTICAL CHARACTERISTICS

Optical characteristics are determined after the unit has been on and stable for approximately 30 minutes dark environment at 25℃.the value specified are at an approximate distance 500mm from the LCD surface at a viewing angle and θ equal to 0

8.1 LCD Optical Characteristics

Parameter		Symbol	Condition	Min.	Typ.	Max.	Unit	Remark
Viewing Angle	Φ=3 O'clock	θ	Cr＞10	-	80	-	deg	Note 1
	Φ=9 O'clock			-	80	-		
	Φ= 6 O'clock			-	80	-		
	Φ=12 O'clock			-	80	-		
Response time		Tr+Tf	θ=0 Φ=0	-	25	35	ms	Note 2
Contrast ratio		Cr		640	800	-		Note 3
CIE(x,y) chromaticity	RED	X	θ=0 Φ=0	-	TBD	-	-	Note 4
		Y		-	TBD	-		
	GREEN	X		-	TBD	-		
		Y		-	TBD	-		
	BLUE	X		-	TBD	-		
		Y		-	TBD	-		
	WHITE	X		-	TBD	-		
		Y		-	TBD	-		
Uniformity(%)		-	-	80	-	-	-	Note 5
Luminance		L	-	-	360	-	-	Note 6

Note 1. LCD Viewing Angle

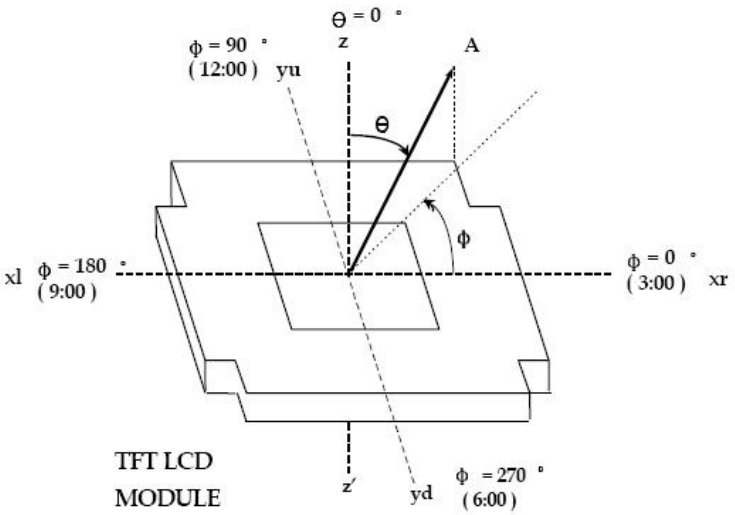

Viewing angle is the angle at which the contrast ratio is greater than 10.the angles are determined for the horizontal or x axis and the vertical or y axis with respect to the z axis which is normal to the LCD surface.

Note 2. Response time

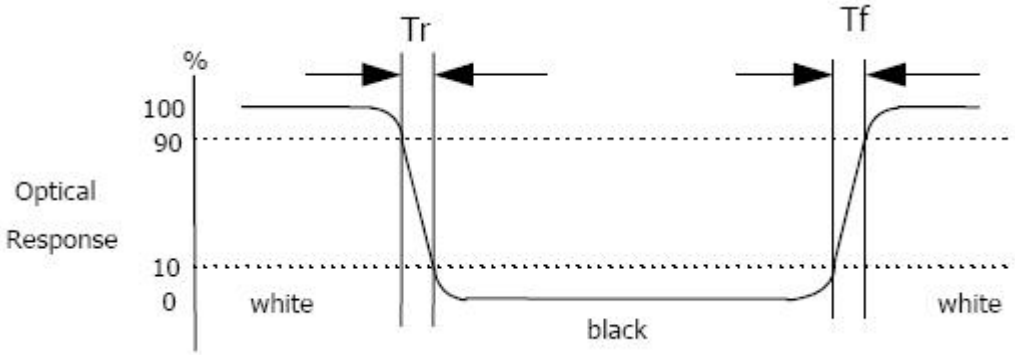

Response time is the time required for the display to transition from white to black (Rising time, Tr) and from black to white (Falling time, Tf).for additional information

Note 3. Contrast Ratio(CR)

Contrast Ratio(CR) is defined mathematically as:

$$\text{Contrast Ratio} = \frac{\text{Surface Luminance with all white pixels}}{\text{Surface Luminance with all black pixels}}$$

Surface luminance is the center point across the lcd surface 500mm from the surface with all pixels displaying white.

Note 4. Definition of optical measurement setup

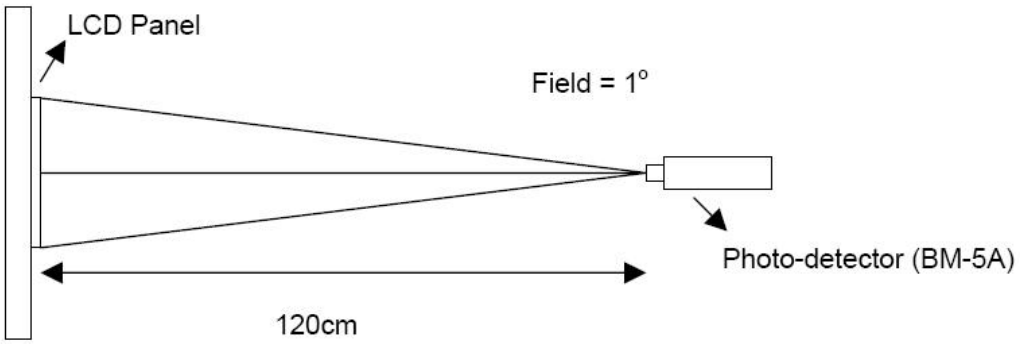

Note 5. Definition of luminance uniformity

Active area is divided into 9 measuring areas . Every measuring point is placed at the center of each measuring area.

Luminance Uniformity(U) = Lmin/ Lmax

L-------Active area length W----- Active area width

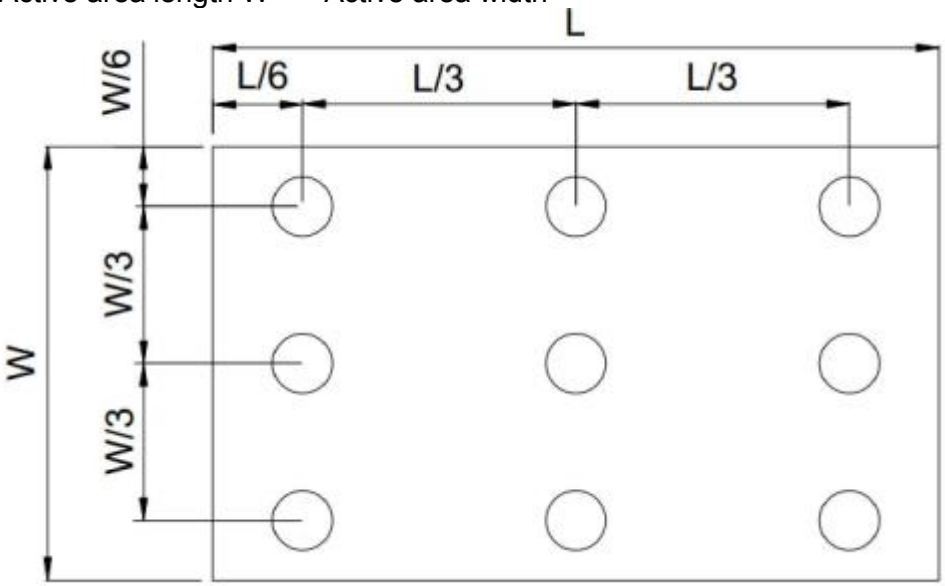

Lmax: The measured maximum luminance of all measurement position.

Lmin: The measured minimum luminance of all measurement position.

Note 6. Definition of luminance:

Measure the luminance of white state at center point.

9.0 INSPECTION CRITERIA

9.1 Inspection Conditions

9.1.1 Environmental conditions

The environmental conditions for inspection shall be as follows

Room temperature: 20±3°C

Humidity: 65±20%RH

9.1.2 Environmental conditions

With a single 20-watt fluorescent lamp as the light source, the inspection was in the distance of 30cm or more from the LCD to the inspector's eyes.

9.2 Light Method

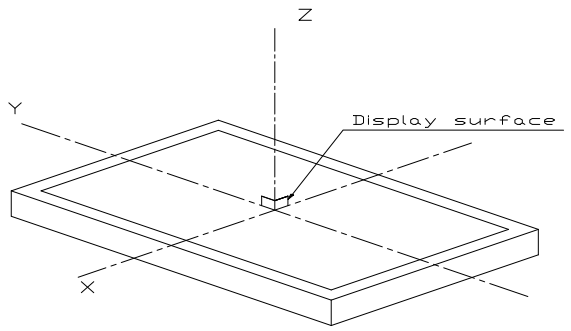

Fluorescent lamp perpendicular to the display surface

Inspection distance and angle

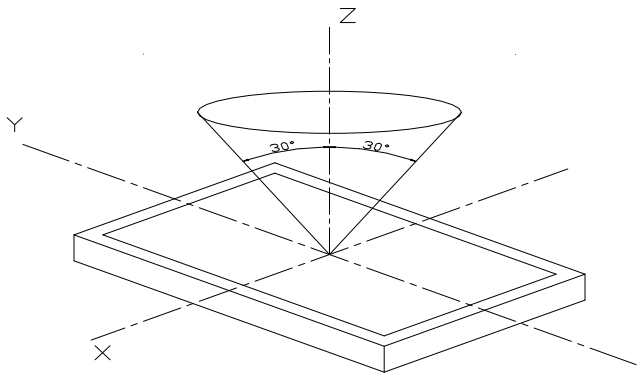

Inspection should be performed within angle Φ (Φ is usually 30°) from Z axis to each X and Y.

Inspection distance in any direction within Φ must be kept 30±5cm from the display surface.

9.3 Classification of defects

9.3.1 Major defect

No.	Item	Inspection Standard	Classification of defects
1	All functional defects	1) No display 2) Display abnormally 3) Open or missing segment 4) Short circuit 5) Excess power consumption 6) Backlight no lighting, flickering and abnormal lighting	Major
2	Missing	Missing component	Major
3	Outline dimension	Overall outline dimension beyond the drawing is not allowed	Major

9.3.2 Cosmetic Defect

No.	Item	Inspection Standard	Classification of defects
1	(spot defect) Black and White spot pinhole	For dark/white spot, size Φ is defined as Φ=(x+y)/2 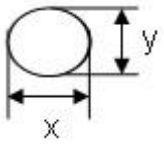 Size Φ (mm) / Acceptable Quantity Φ≤0.1 / Ignore 0.10≤Φ≤0.15 / 2 0.15≤Φ≤0.2 / 1 0.2<Φ / 0	Minor
2	(line defect) Black and White line	Define:	Minor

<table>
<tr><td></td><td>Polarizer scratch</td><td><table><tr><th>Width(mm)</th><th>Length(mm);Acceptable Qty</th></tr><tr><td>Φ≤0.03 L≤1.0</td><td>Ignore</td></tr><tr><td>0.03<W≤0.05</td><td>L≤3.0; N≤2</td></tr><tr><td>0.05<W or L>3.0</td><td>Define as spot defect</td></tr></table></td><td></td></tr>
<tr><td>3</td><td>Polarizer defect</td><td>Dent or bubble(between the polarizer and glass)<table><tr><th>Size Φ(mm)</th><th>Acceptable Qty</th></tr><tr><td>Φ≤0.10</td><td>Ignor</td></tr><tr><td>0.10<Φ≤0.15</td><td>2</td></tr><tr><td>0.15<Φ≤0.20</td><td>1</td></tr><tr><td>0.20<Φ</td><td>0</td></tr></table></td><td>Minor</td></tr>
</table>

9.3.3 Cosmetic Defect

<table>
<tr><th>No.</th><th>Item</th><th>Inspection Standard</th><th>Classification of defects</th></tr>
<tr><td>1</td><td>Glass defect</td><td>1) Chip on the corner
 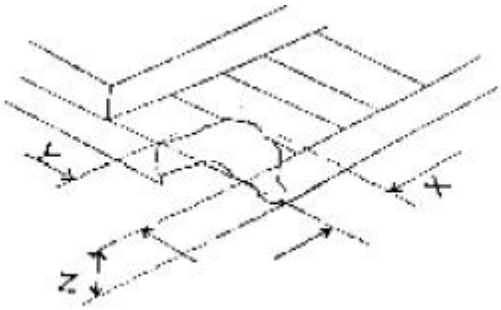

<table><tr><th>X</th><th>Y</th><th>Z</th></tr><tr><td>≤3.0</td><td>≤S</td><td>≤T</td></tr></table>
Remark: S=contact pad length;
T=the thickness of glass
Chips on the corner of terminal shall not be allowed to extend into the ITO pad or expose perimeter seal. Acceptable Quantity N≤2.</td><td>Minor</td></tr>
</table>

<table>
<tr><td></td><td></td><td>2) Chip on the edge of glass
 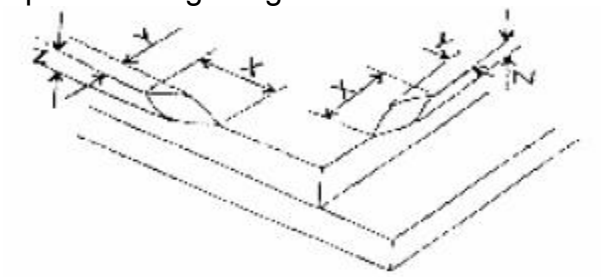
<table><tr><th>X</th><th>Y</th><th>Z</th></tr><tr><td>Ignore</td><td>≤0.5</td><td>≤T</td></tr></table>
Acceptable Quantity: N≤2</td><td>Minor</td></tr>
<tr><td></td><td></td><td>3) Creak
Creaks tend to break are not allowed.
 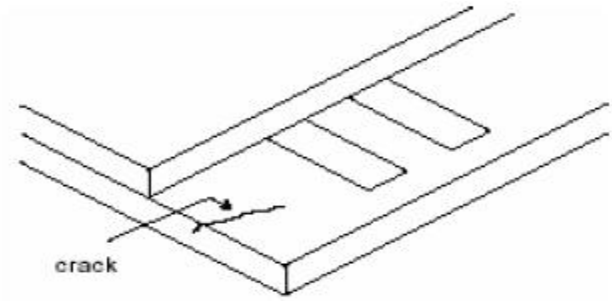
</td><td>Minor</td></tr>
</table>

10.0 RELIABILITY AND INSPECTION STANDARD

NO.	Test Item	Test condition	Criterion
1	High Temperature Storage	80℃±2℃ 96H Restore 2H at 25℃ Power off	After testing, cosmetic and electrical defects should not happen.
2	Low Temperature Storage	-30℃±2℃ 96H Restore 2H at 25℃ Power off	
3	High Temperature Operation	70℃±2℃ 96H Restore 2H at 25℃ Power on	
4	Low Temperature Operation	-20℃±2℃ 96H Restore 2H at 25℃ Power on	
5	High Temperature & Humidity Storage	60℃±2℃ 90%RH 96H Power off	
6	Temperature Cycle	--30℃←→25℃←→80℃ 30min 5min 30min after 10cycle, Restore 2H at 25℃ Power off	
7	Vibration Test	10Hz~150Hz, 100m/s2, 120min	
8	Shock Test	Half-sinewave,300m/s2,11ms	
9	Drop Test(package state)	600mm, concrete floor,1corner, 3edges, 6 sides each time	1.After testing, cosmetic and electrical defects should not happen. 2.The product should remain at initial place. 3.Product uncovered or package broken is not permitted.

11.0 PRECAUTIONS FOR USING LCD MODULE

11.1 Handing Precautions

(1) The display panel is made of glass and polarizer. As glass is fragile, it tends to become or chipped during handling especially on the edges. Please avoid dropping or jarring. Do not subject it to a mechanical shock by dropping it or impact.

(2) If the display panel is damaged and the liquid crystal substance leaks out, be sure not to get any in your mouth. If the substance contacts your skin or clothes, wash it off using soap and water.

(3) Do not apply excessive force to the display surface or the adjoining areas since this may cause the color tone to vary. Do not touch the display with bare hands. This will stain the display area and degraded insulation between terminals (some cosmetics are determined to the polarizer).

(4) The polarizer covering the display surface of the LCD module is soft and easily scratched. Handle this polarizer carefully. Do not touch, push or rub the exposed polarizers with anything harder than an HB pencil lead (glass, tweezers, etc.). Do not put or attach anything on the display area to avoid leaving marks on. Condensation on the surface and contact with terminals due to cold will damage, stain or dirty the polarizer. After products are tested at low temperature they must be warmed up in a container before coming is contacting with room temperature air.

(5) If the display surface becomes contaminated, breathe on the surface and gently wipe it with a soft dry cloth. If it is heavily contaminated, moisten cloth with one of the following solvents
- Isopropyl alcohol
- Ethyl alcohol

Do not scrub hard to avoid damaging the display surface.

(6) Solvents other than those above-mentioned may damage the polarizer. Especially, do not use the following.
- Water
- Ketone
- Aromatic solvents

Wipe off saliva or water drops immediately, contact with water over a long period of time may cause deformation or color fading. Avoid contacting oil and fats.

(7) Exercise care to minimize corrosion of the electrode. Corrosion of the electrodes is accelerated by water droplets, moisture condensation or a current flow in a high-humidity environment.

(8) Install the LCD Module by using the mounting holes. When mounting the LCD module make sure it is free of twisting, warping and distortion. In particular, do not forcibly pull or bend the I/O cable or the backlight cable.

(9) Do not attempt to disassemble or process the LCD module.

(10) NC terminal should be open. Do not connect anything.
(11) If the logic circuit power is off, do not apply the input signals.
(12) Since LCM has been assembled and adjusted with a high degree of precision, avoid applying excessive shocks to the module or making any alterations or modifications to it.
- Do not alter, modify or change the shape of the tab on the metal frame.
- Do not make extra holes on the printed circuit board, modify its shape or change the positions of components to be attached.
- Do not damage or modify the pattern writing on the printed circuit board.
- Absolutely do not modify the zebra rubber strip (conductive rubber) or heat seal connector.
- Except for soldering the interface, do not make any alterations or modifications with a soldering iron.
- Do not drop, bend or twist LCM.

11.2 Storage Precautions

When storing the LCD modules, the following precaution is necessary.
(1) Store them in a sealed polyethylene bag. If properly sealed, there is no need for the dessicant.
(2) Store them in a dark place. Do not expose to sunlight or fluorescent light, keep the temperature between 0°C and 35°C.
(3) The polarizer surface should not come in contact with any other objects. (We advise you to store them in the container in which they were shipped).

11.3 Others

Liquid crystals solidify under low temperature (below the storage temperature range) leading to defective orientation or the generation of air bubbles (black or white). Air bubbles may also be generated if the module is subject to a low temperature.
If the LCD modules have been operating for a long time showing the same display patterns, the display patterns may remain on the screen as ghost images and a slight contrast irregularity may also appear. A normal operating status can be regained by suspending use for some time. It should be noted that this phenomenon does not adversely affect performance reliability.