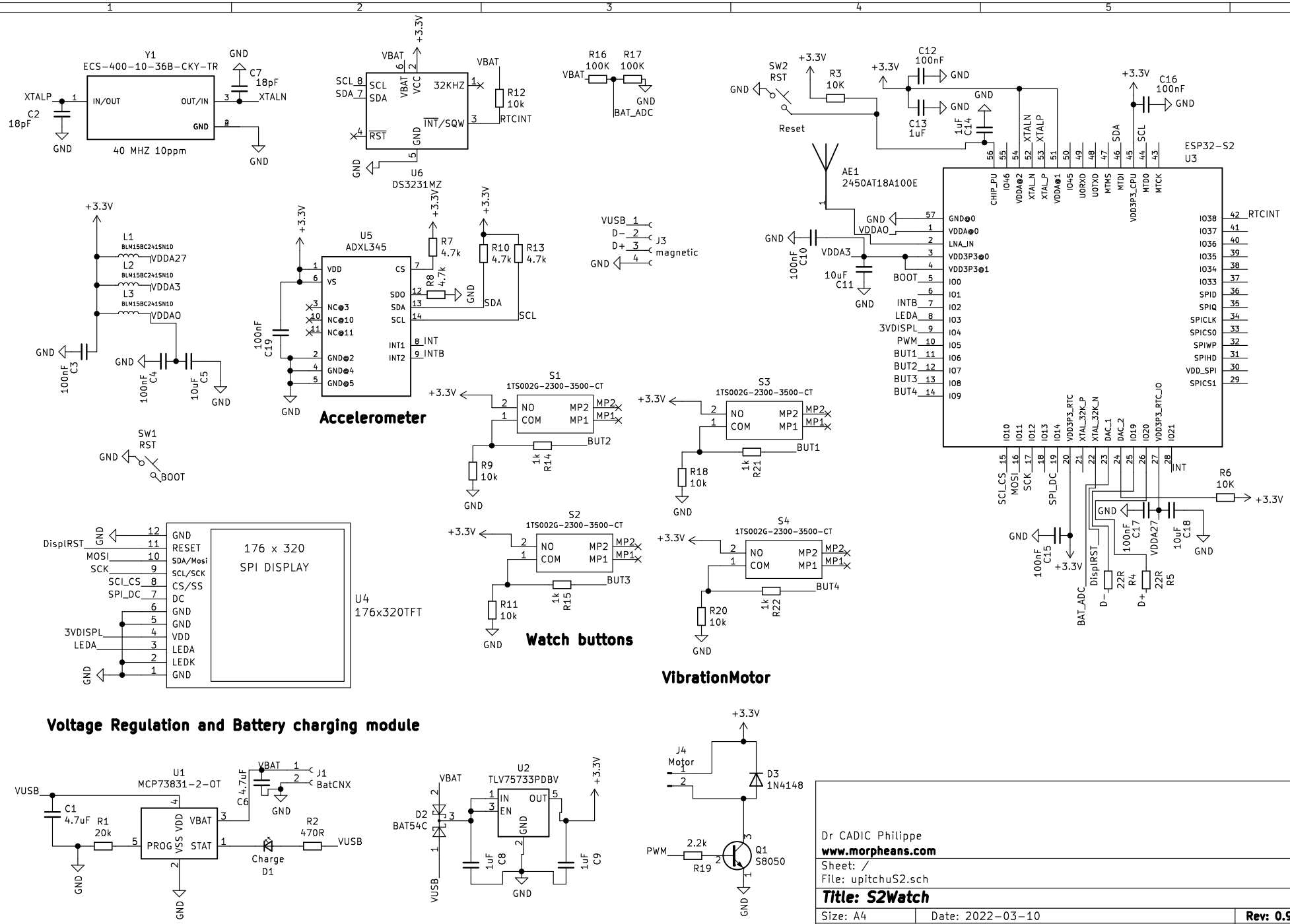

Dr CADIC Philippe
www.morpheans.com

Sheet: /
File: upitchuS2.sch

Title: S2Watch

Size: A4	Date: 2022-03-10	**Rev: 0.9**
KiCad E.D.A. kicad (5.1.12)-1		Id: 1/1