NOTE:
1. CHAMFERS .035 TYP

REVISIONS				
ZONE	REV.	DESCRIPTION	DATE	APPROVED

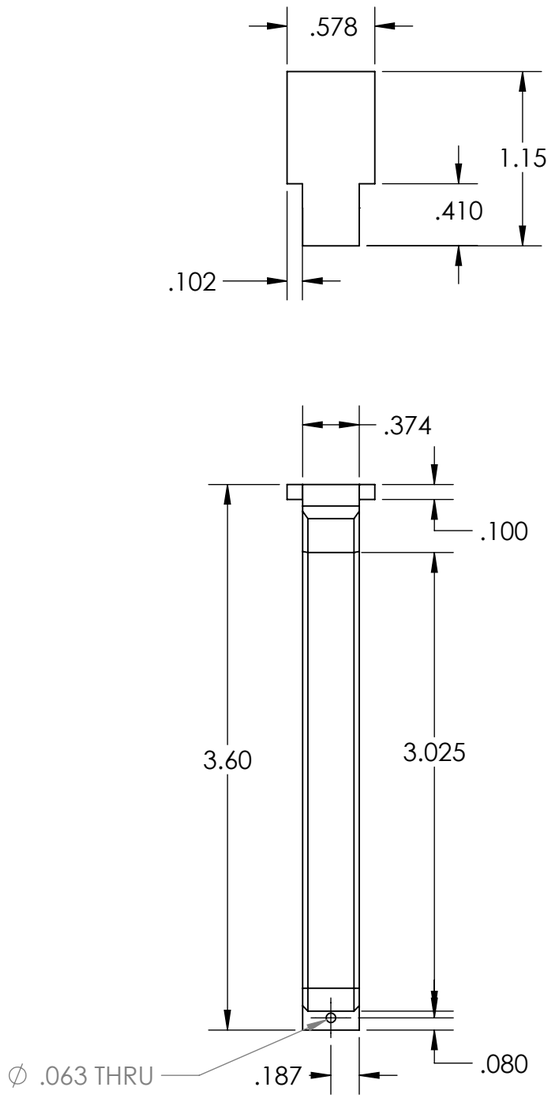

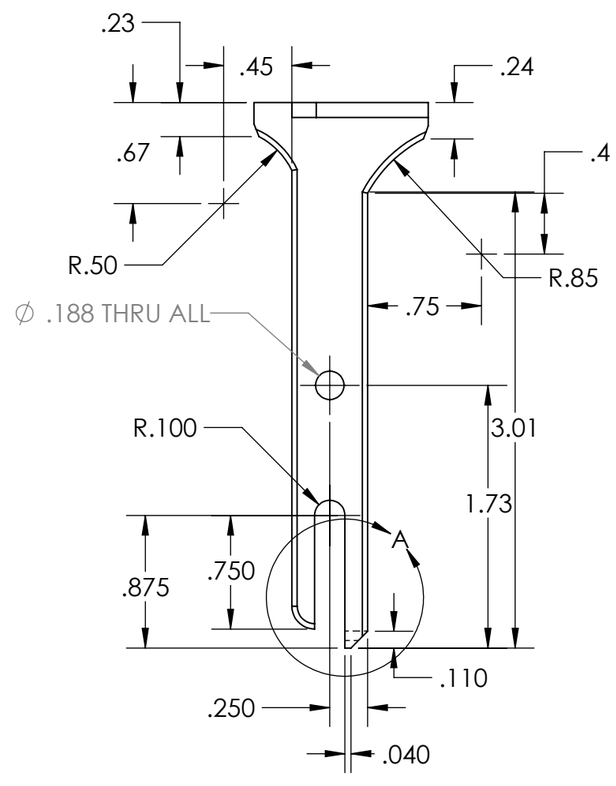

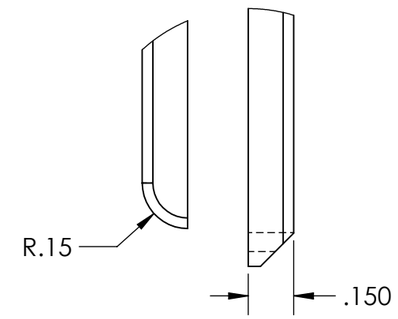

DETAIL A
SCALE 2 : 1

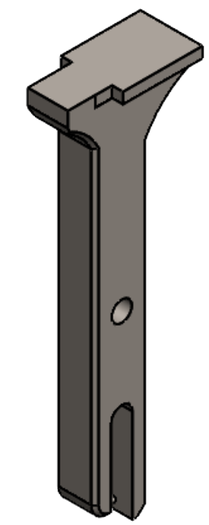

UNLESS OTHERWISE SPECIFIED:		NAME	DATE
DIMENSIONS ARE IN INCHES TOLERANCES: FRACTIONAL ±1/16 ANGULAR: MACH ±.5 BEND ±.1 TWO PLACE DECIMAL ±.03 THREE PLACE DECIMAL ±.01	DRAWN	ACC	11/25/2022
	CHECKED		
	ENG APPR.		
	MFG APPR.		
INTERPRET GEOMETRIC TOLERANCING PER:	Q.A.		
MATERIAL AISI TYPE A2 TOOL STEEL	COMMENTS:		
FINISH NONE			
DO NOT SCALE DRAWING			

PROPRIETARY AND CONFIDENTIAL

THE INFORMATION CONTAINED IN THIS DRAWING IS THE SOLE PROPERTY OF <INSERT COMPANY NAME HERE>. ANY REPRODUCTION IN PART OR AS A WHOLE WITHOUT THE WRITTEN PERMISSION OF <INSERT COMPANY NAME HERE> IS PROHIBITED.

NEXT ASSY	USED ON
APPLICATION	

CHAFFEY COLLEGE

TITLE:
JAW SUPPORT LT&RH

SIZE	DWG. NO.	REV
B	AM_SB3_JWSLTRH02	-
SCALE: 1:1	WEIGHT: 0.190	SHEET 1 OF 1

SOLIDWORKS Educational Product. For Instructional Use Only.