REVISIONS				
ZONE	REV.	DESCRIPTION	DATE	APPROVED

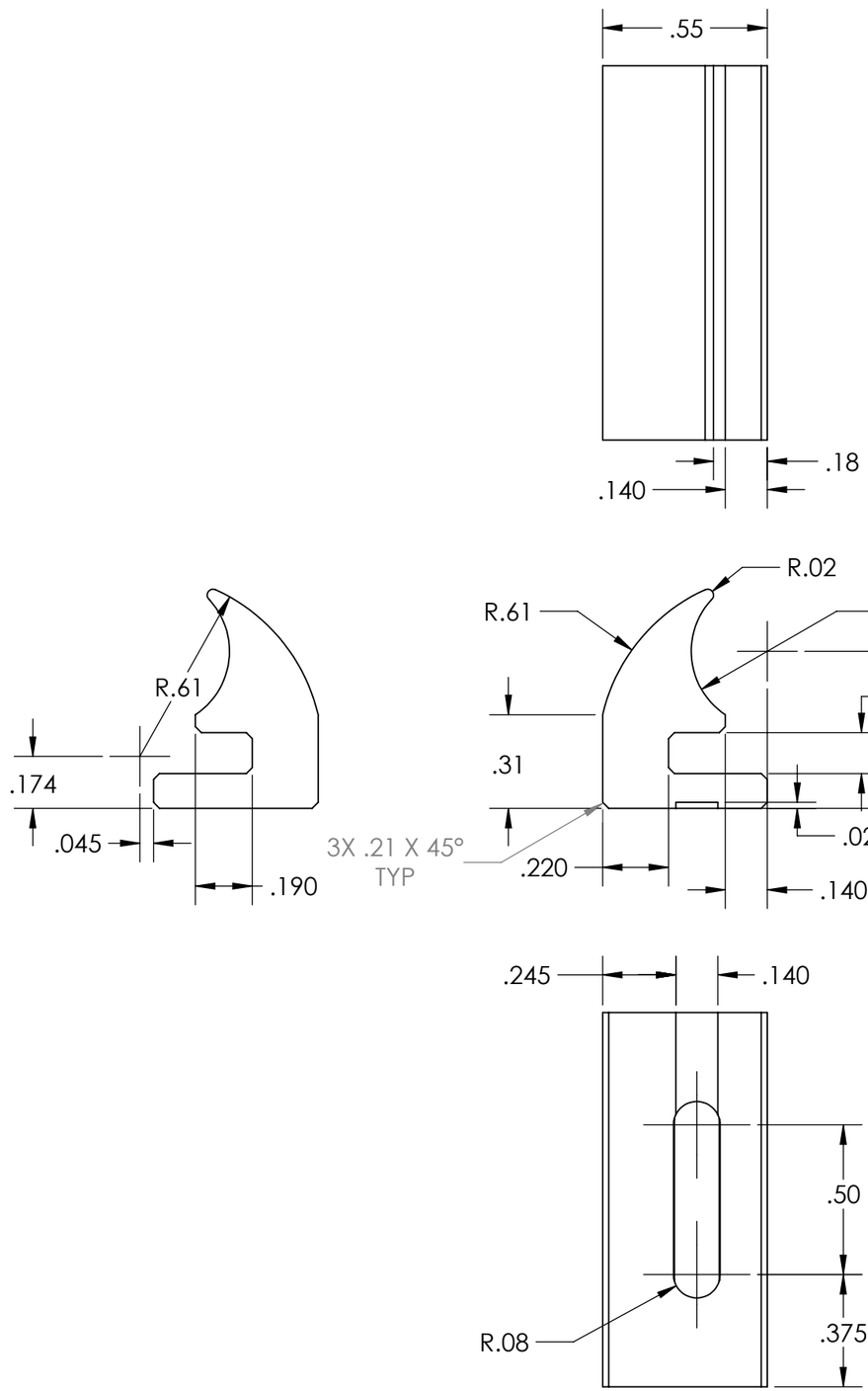

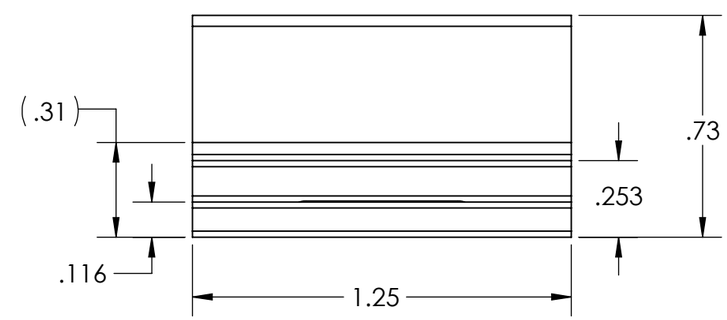

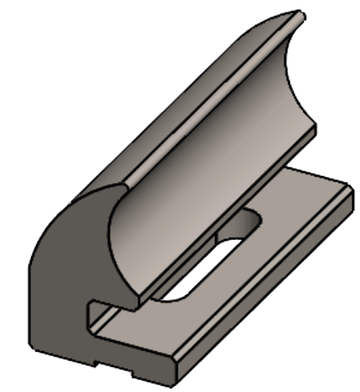

NOTE
1. THIS IS A MIRROR PART, IF THE CUT UNDER THE BASE IS ON THE SAME SIDEOF THE RIGHT PART, IT WILL CAME OFF OF THE BASE MECHANISM.

PROPRIETARY AND CONFIDENTIAL

THE INFORMATION CONTAINED IN THIS DRAWING IS THE SOLE PROPERTY OF <INSERT COMPANY NAME HERE>. ANY REPRODUCTION IN PART OR AS A WHOLE WITHOUT THE WRITTEN PERMISSION OF <INSERT COMPANY NAME HERE> IS PROHIBITED.

NEXT ASSY	USED ON
APPLICATION	

UNLESS OTHERWISE SPECIFIED:

DIMENSIONS ARE IN INCHES
TOLERANCES:
FRACTIONAL ±1/16
ANGULAR: MACH ±.5 BEND ±.1
TWO PLACE DECIMAL ±.03
THREE PLACE DECIMAL ±.01

INTERPRET GEOMETRIC TOLERANCING PER:

MATERIAL
AISI TYPE A2 TOOL STEEL

FINISH
NONE

DO NOT SCALE DRAWING

	NAME	DATE
DRAWN	ACC	11/25/2022
CHECKED		
ENG APPR.		
MFG APPR.		
Q.A.		

COMMENTS:

CHAFFEY COLLEGE

TITLE:
SLIDE GUIDE GRIP MECHANISM LT

SIZE	DWG. NO.	REV
B	AM_SB1_SGLTHB02	-

SCALE: 2:1 | WEIGHT: 0.070 | SHEET 1 OF 1

SOLIDWORKS Educational Product. For Instructional Use Only.