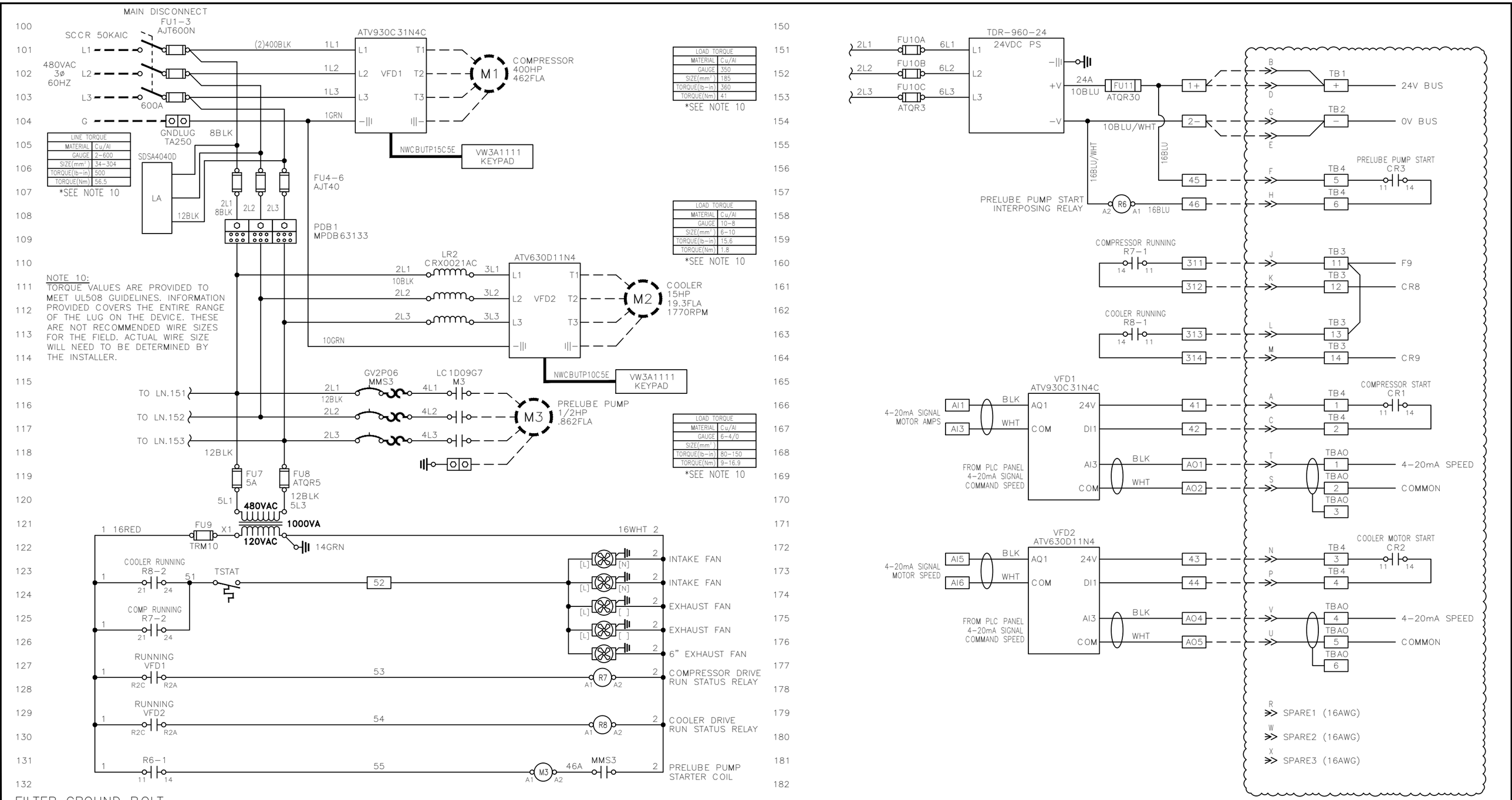

FILTER GROUND BOLT
MOVE TO UNGROUNDED SELECTION
TECH NOTE: MBR1

WIRE COLOR:

BLACK – LINE VOLTAGE
RED – 120VAC
WHITE – NEUTRAL
GREEN – GROUND
BLUE – 24VDC+
BLUE W/ WHITE – 24VDC–

NOTES:

1) ALL WIRING CONNECTED TO THIS CABINET MUST BE RATED AT LEAST 75° AND BE COPPER.

SPARE FUSES:

PART#	AMP	QTY
ATQR5	5A	2
ATQR30	30A	2
TRM10	10A	2
ATQR3	3A	2

INTERNAL WIRING
FIELD WIRING
CLASS II FIELD WIRING

REVISIONS

REV	DESCRIPTION	DATE	BY
B	AS BUILT	9/15/23	JC

NOTICE:
THIS DRAWING HAS NOT BEEN PUBLISHED AND IS THE SOLE PROPERTY OF:
DK CONTROLS, LLC
AND IS LENT TO THE BORROWER FOR HIS CONFIDENTIAL USE ONLY. IN CONSIDERATION OF THE LOAN OF THIS DRAWING, THE BORROWER PROMISES AND AGREES TO RETURN IT UPON REQUEST AND AGREES THAT IT SHALL NOT BE REPRODUCED, COPIED, LENT OR OTHERWISE DISPOSED OF DIRECTLY OR INDIRECTLY, NOR USED FOR ANY PURPOSE OTHER THAN THAT FOR WHICH IT IS SPECIFICALLY FURNISHED

APPROVED: DATE
CHECKED: DATE
BY: JC DATE 0923
ASSEMBLY #: QTY:
SCALE:

DK CONTROLS, LLC
3680 W. Royal Ln, #175
Irving, TX 75063
Phone 972.893.6939
Fax 972.893.6949

TITLE: VRU CONTROL, VFD PANEL WIRING DIAGRAM
30955-400HP-VFD-FC-PP-NOPLC-S *

CUSTOMER: ENCORE
DWG. NO.: * -1
REV. B

DK CONTROLS' FACTORY DEFAULT SETTINGS

VFD PARAMETERS		ACTUAL VALUE	QC1	QC2
1. SIMPLY START				
• MOTOR STANDARD	60HZ NEMA			
• NOMINAL MOTOR POWER	400HP			
• NOM MOTOR VOLTAGE	460V			
• NOM MOTOR CURRENT	510A			
• NOM MOTOR SPEED	1790RPM			
• MAX FREQUENCY	60HZ			
• ACCEL TIME	10S			
• DECEL TIME	10S			
• LOW SPEED	30HZ			
8. MY PREFERENCES				
• 8.6 ACCESS LEVEL	EXPERT			
5. COMPLETE SETTINGS				
• 5.2 MOTOR PARAMETERS				
•• DUAL RATING	NORMAL DUTY			
•• MOTOR CONTROL TYPE	SVC V			
•• MOTOR MONITORING				
••• CURRENT LIMITATION	739A			
• 5.4 COMMAND AND REFERENCE				
•• REF FREQ 1 CONFIG	AI3, 4–20mA			
•• REVERSE DISABLE	YES			
•• CONTROL MODE	SEPARATE			
•• CMD CH1	TERMINALS			
•• REVERSE ASSIGN	NOT ASSIGNED			
• 5.12 GENERIC FUNCTIONS				
•• SPEED LIMITS				
••• REF FREQ TEMPLATE	PEDESTAL			
• 5.14 INPUT/OUTPUT				
•• AI/AO (3RD BUTTON)				
••• AI3 CONFIG				
•••• AI3 TYPE	CURRENT			
•••• AI3 MIN VALUE	4.0mA			
••• AQ1 CONFIG				
•••• AQ1 ASSIGNMENT	CURRENT			
•••• AQ1 TYPE	CURRENT			
•••• AQ1 MIN VALUE	4.0mA			
•••• AQ1 MAX VALUE	20.0mA			
•••• SCALING AQ1 MIN	0%			
•••• SCALING AQ1 MAX	100%			
•• RELAY (4TH BUTTON)				
••• R1 ASSIGNMENT	OPER STATE FAULT			
••• R2 ASSIGNMENT	DRIVE RUNNING			
• 5.16 ERROR/WARNING HANDLING				
•• OUTPUT PHASE LOSS				
••• OUTPUT PH LOSS ASSIGN	OPF ERROR TRIGGER			

THE FOLLOWING PARAMETERS WERE SET BY DK CONTROLS DURING TESTING AT OUR FACILITY. HOWEVER IT IS THE RESPONSIBILITY OF THE END USER TO VERIFY THEIR MOTOR DATA AGAINST THE ACTUAL MOTOR BEING USED AS AMPS CAN FLUCTUATE DEPENDING ON RPMs AND STYLE OF MOTOR.

NOTE: BEFORE SETTING PARAMETERS, SET HEAVY/NORMAL DUTY

NOTE: ONCE ALL SETUP IN FIELD IS COMPLETE, SAVE PARAMETERS TO DRIVE KEYPAD.
7. FILE MANAGEMENT > 7.1 TRANSFER CONFIG FILE, COPY FILE FROM DRIVE, DRIVE CONFIG PAC 0, PRESS 0, TRANSFER IN PROGRESS > TRANSFER COMPLETE

NOTE: FOR TESTING, GO TO COMPLETE SETTINGS (5) IN MAIN MENU, SCROLL TO ERROR WARNING HANDLING (5.12) AND SET OUTPUT PHASE LOSS TO FUNCTION INACTIVE. GO TO MOTOR DATA (5.2) AND LOWER NOMINAL MOTOR CURRENT FOR TESTING.

DK CONTROLS' FACTORY DEFAULT SETTINGS

VFD2 PARAMETERS		ACTUAL VALUE	QC1	QC2
1. SIMPLY START				
• MOTOR STANDARD	60HZ NEMA			
• NOMINAL MOTOR POWER	15HP			
• NOM MOTOR VOLTAGE	480V			
• NOM MOTOR CURRENT	19.3A			
• NOM MOTOR SPEED	1770			
• MAX FREQUENCY	60HZ			
8. MY PREFERENCES				
• 8.6 ACCESS LEVEL	EXPERT			
5. COMPLETE SETTINGS				
• 5.2 MOTOR PARAMETERS				
•• DUAL RATING	NORMAL DUTY			
•• MOTOR CONTROL TYPE	UF VC STD			
• 5.5 COMMAND AND REFERENCE				
•• REF FREQ 1 CONFIG	AI3, 4–20mA			
•• REVERSE DISABLE	YES			
•• CONTROL MODE	SEPARATE			
•• CMD CH1	TERMINALS			
5.11 INPUT/OUTPUT				
• AI/AO (3RD BUTTON)				
•• AI3 CONFIG				
••• AI3 TYPE	CURRENT			
••• AI3 MIN VALUE	4.0mA			
•• AQ1 CONFIG				
••• AQ1 ASSIGNMENT	FREQUENCY			
••• AQ1 TYPE	CURRENT			
••• AQ1 MIN VALUE	4.0mA			
••• AQ1 MAX VALUE	20.0mA			
••• SCALING AQ1 MIN	0%			
••• SCALING AQ1 MAX	100%			
• RELAY (4TH BUTTON)				
•• R1 ASSIGNMENT	OPER STATE FAULT			
•• R2 ASSIGNMENT	DRIVE RUNNING			
5.12 ERROR/WARNING HANDLING				
• OUTPUT PHASE LOSS				
•• OUTPUT PHASE LOSS ASSIGN	OPF ERR TRG			
8. MY PREFERENCES				
• 8.4 CUSTOMIZATION				
•• PARAM BAR SELECT				
••• MOTOR CURRENT				
••• MOTOR SPEED				

THE FOLLOWING PARAMETERS WERE SET BY DK CONTROLS DURING TESTING AT OUR FACILITY. HOWEVER IT IS THE RESPONSIBILITY OF THE END USER TO VERIFY THEIR MOTOR DATA AGAINST THE ACTUAL MOTOR BEING USED AS AMPS CAN FLUCTUATE DEPENDING ON RPMs AND STYLE OF MOTOR.

NOTE: BEFORE SETTING PARAMETERS, SET HEAVY/NORMA DUTY

NOTE: ONCE ALL SETUP IN FIELD IS COMPLETE, SAVE PARAMETERS TO DRIVE KEYPAD.
7. FILE MANAGEMENT > 7.1 TRANSFER CONFIG FILE, COPY FILE FROM DRIVE, DRIVE CONFIG PAC 0, PRESS 0 TRANSFER IN PROGRESS > TRANSFER COMPLETE

NOTE: FOR TESTING, GO TO COMPLETE SETTINGS (5) IN MAIN MENU, SCROLL TO ERROR WARNING HANDLING (5.12) AND SET OUTPUT PHASE LOSS TO FUNCTION INACTIVE. GO TO MOTOR DATA (5.2) AND LOWER NOMINA MOTOR CURRENT FOR TESTING.

REVISIONS

REV	DESCRIPTION	DATE	BY
B	AS BUILT	9/15/23	JC

NOTICE:
THIS DRAWING HAS NOT BEEN PUBLISHED AND IS THE SOLE PROPERTY OF:
DK CONTROLS, LLC
AND IS LENT TO THE BORROWER FOR HIS CONFIDENTIAL USE ONLY. IN CONSIDERATION OF THE LOAN OF THIS DRAWING, THE BORROWER PROMISES AND AGREES TO RETURN IT UPON REQUEST AND AGREES THAT IT SHALL NOT BE REPRODUCED, COPIED, LENT OR OTHERWISE DISPOSED OF DIRECTLY OR INDIRECTLY, NOR USED FOR ANY PURPOSE OTHER THAN THAT FOR WHICH IT IS SPECIFICALLY FURNISHED

APPROVED: DATE
CHECKED: DATE
BY: JC DATE 0923
ASSEMBLY #: QTY:
SCALE:

DK CONTROLS, LLC
3680 W. Royal Ln, #175
Irving, TX 75063
Phone 972.893.6939
Fax 972.893.6949

TITLE: VRU CONTROL, VFD PANEL
DRIVE PARAMETERS
30955–400HP–VFD–FC–PP–NOPLC–S *

CUSTOMER: ENCORE
DWG. NO.: * –2
REV: B

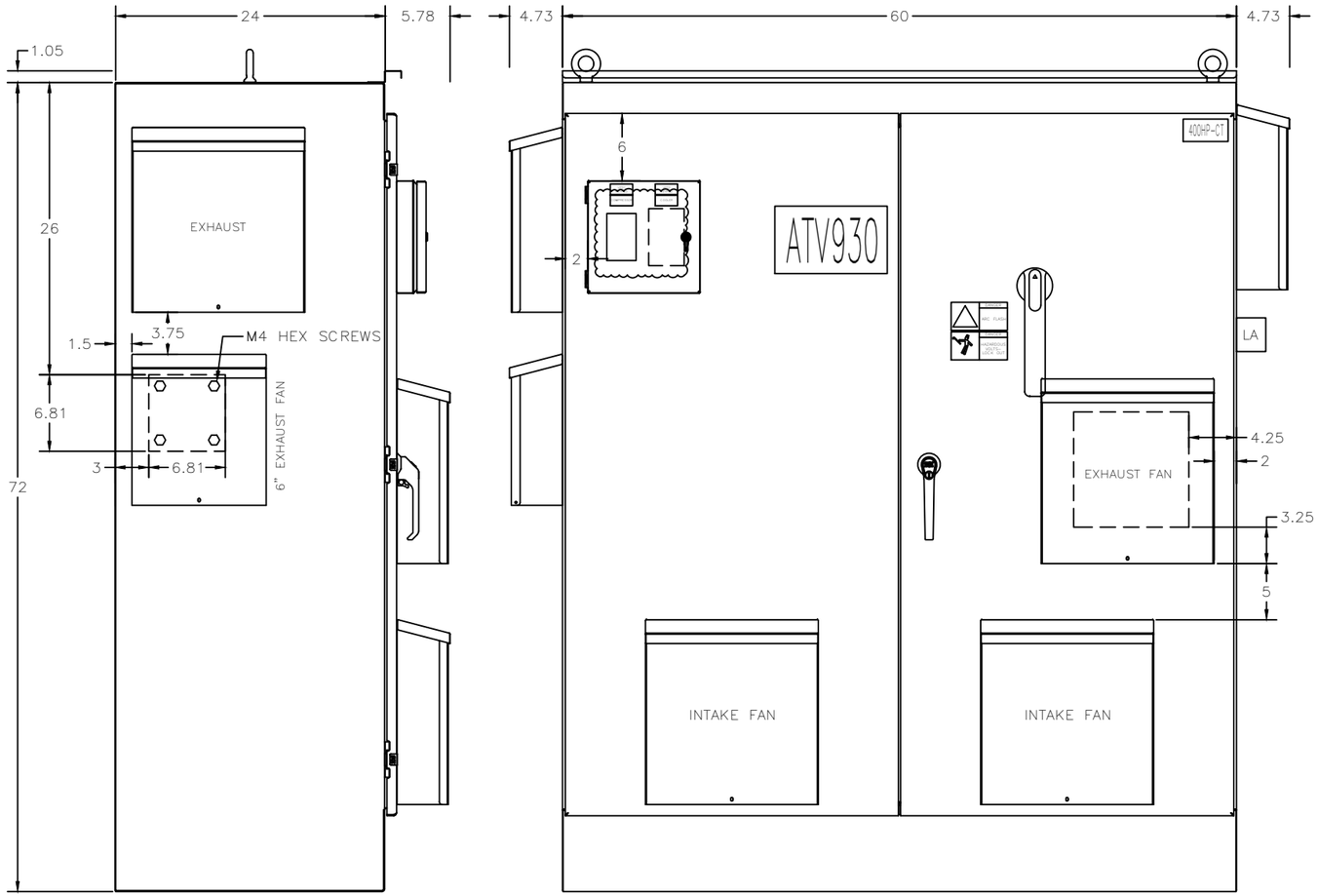

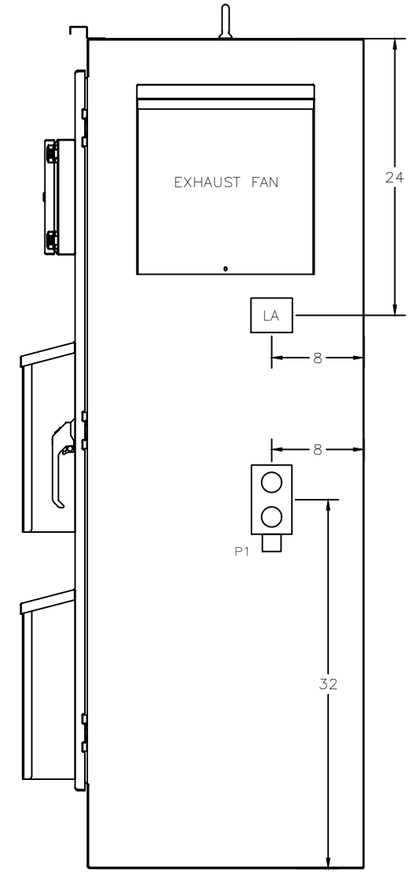

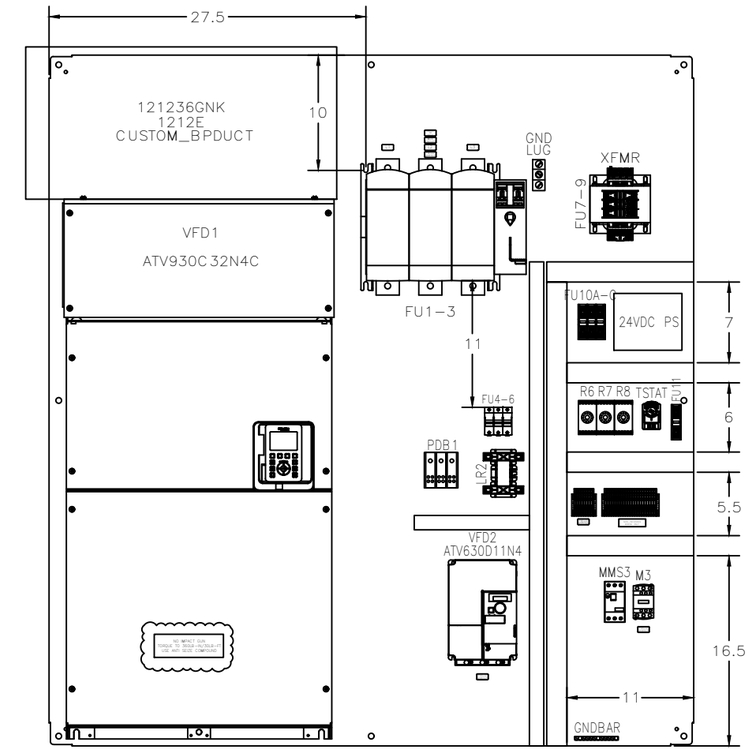

ENCLOSURE: SCE-726024FSD (NEMA 3R)
BACKPLATE: SCE-72P60F1
DRIP SHIELD: SCE-DS60N4
10" RAINHOOD: SCE-RH10N12
6" RAINHOOD: SCE-RH6N12
DOOR COVER: SCE-HA1010

VFD1 KEYPAD

VFD2 KEYPAD

COMPRESSOR

COOLER

400HP-CT

480VAC
3Ø
60HZ

FUSIBLE DISCONNECT

L1 L2 L3

FIELD WIRING

YELLOW W/ BLACK LETTERS

NO IMPACT GUN
TORQUE TO 360LB-IN/30LB-FT
USE ANTI SEIZE COMPOUND

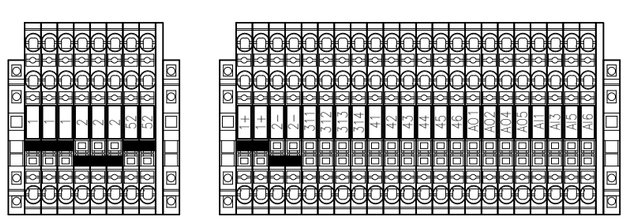

TERMINAL: 3209549
END PLATE: 3030488
END ANCHOR: 3022276
JUMPER: 3030213

NON-INCENDIVE WIRING ONLY

REVISIONS

REV	DESCRIPTION	DATE	BY
B	AS BUILT	9/15/23	JC

NOTICE:
THIS DRAWING HAS NOT BEEN PUBLISHED AND IS THE SOLE PROPERTY OF:
DK CONTROLS, LLC
AND IS LENT TO THE BORROWER FOR HIS CONFIDENTIAL USE ONLY. IN CONSIDERATION OF THE LOAN OF THIS DRAWING, THE BORROWER PROMISES AND AGREES TO RETURN IT UPON REQUEST AND AGREES THAT IT SHALL NOT BE REPRODUCED, COPIED, LENT OR OTHERWISE DISPOSED OF DIRECTLY OR INDIRECTLY, NOR USED FOR ANY PURPOSE OTHER THAN THAT FOR WHICH IT IS SPECIFICALLY FURNISHED

APPROVED: DATE
CHECKED: DATE
BY: JC DATE 0923
ASSEMBLY #: QTY:
SCALE:

DK CONTROLS, LLC
3680 W. Royal Ln, #175
Irving, TX 75063
Phone 972.893.6939
Fax 972.893.6949

TITLE: VRU CONTROL, VFD PANEL
PANEL LAYOUT
30955-400HP-VFD-FC-PP-NOPLC-S *

CUSTOMER: ENCORE
DWG. NO.: * -L
REV: B