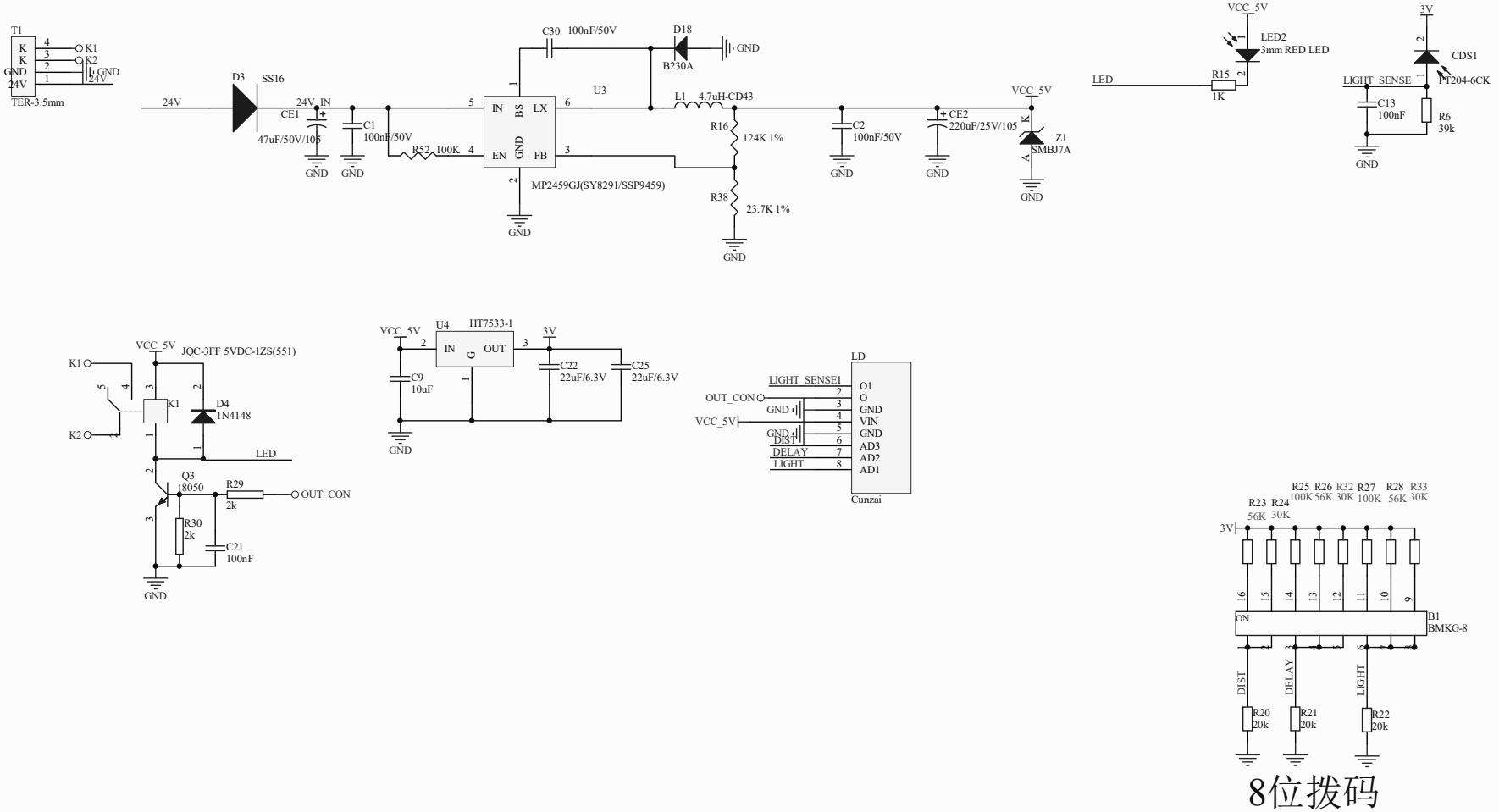

8位拨码

Title		
Size A3	Number	Revision
Date: 2021/4/9	Sheet of	
File: D:\cccc2020\..\存在感应灯控模块-24V-8位拨码V2.SCHDOC	Drawn by:	