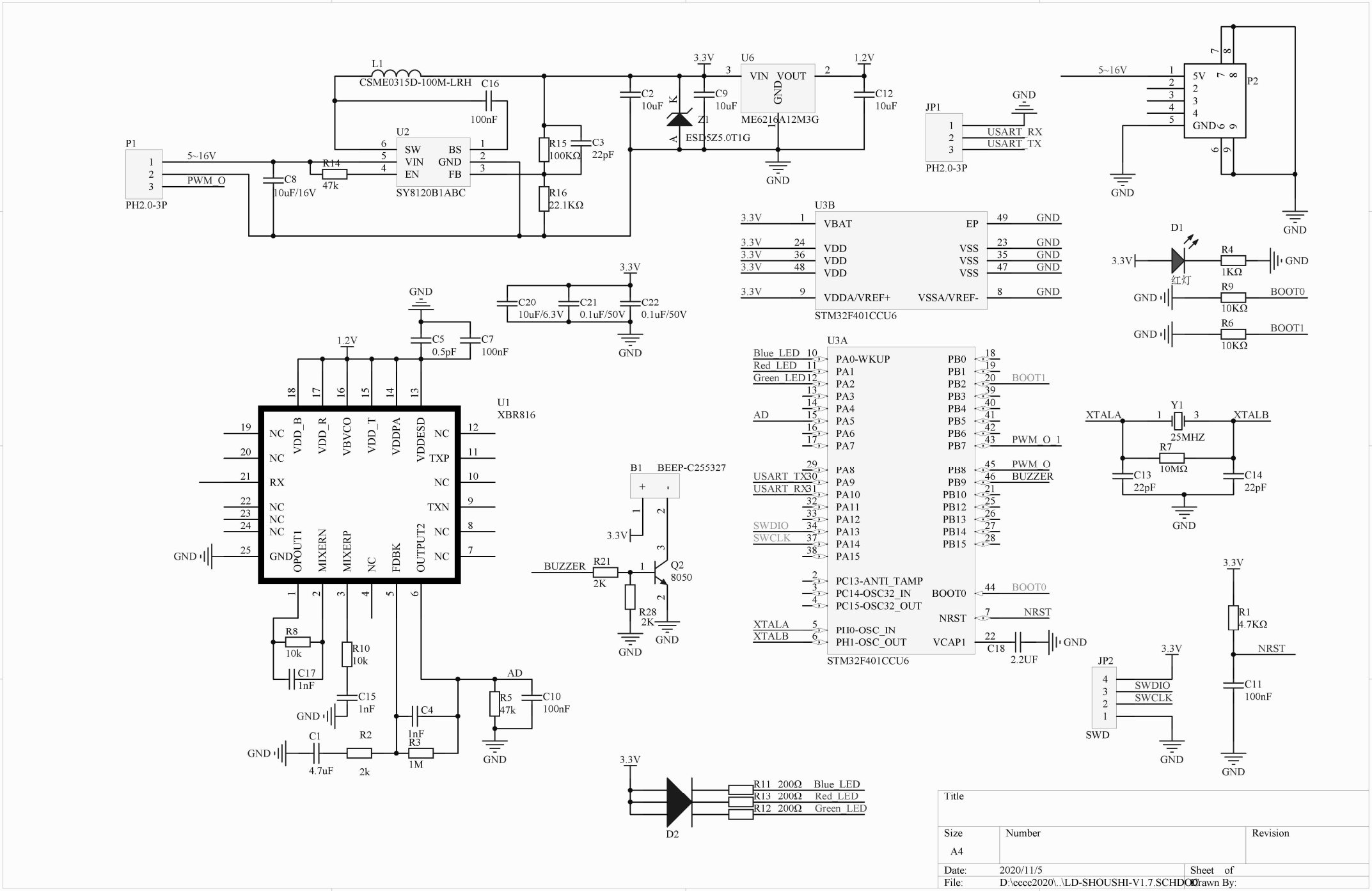

Title		
Size A4	Number	Revision
Date: 2020/11/5	Sheet of	
File: D:\cccc2020\..\LD-SHOUSHI-V1.7.SCHDOC	Drawn By:	