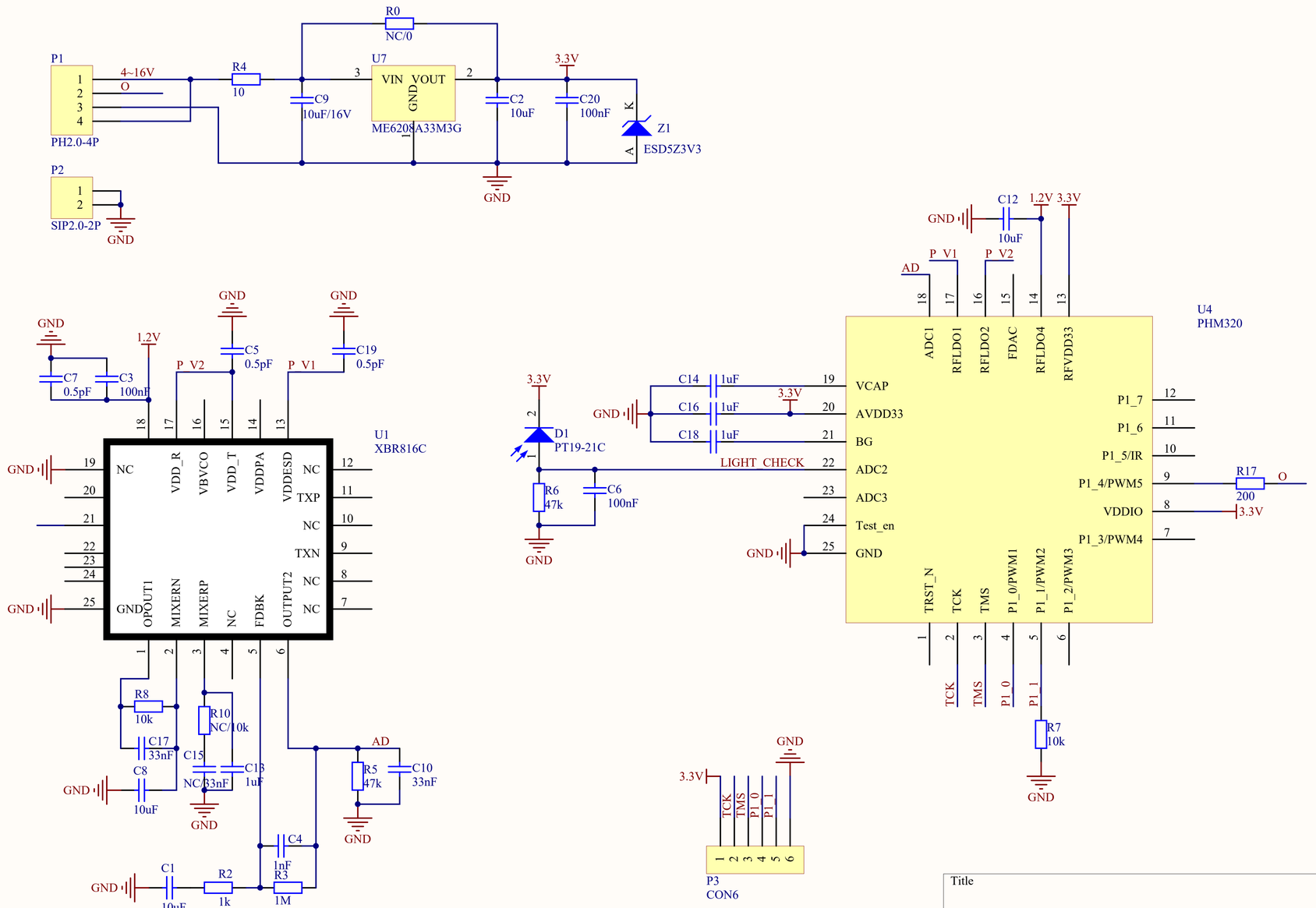

Title		
Size A4	Number	Revision
Date: 2022/4/2		Sheet of
File: D:\phosense\..\BE2022L-V10.SchDoc		Drawn By: