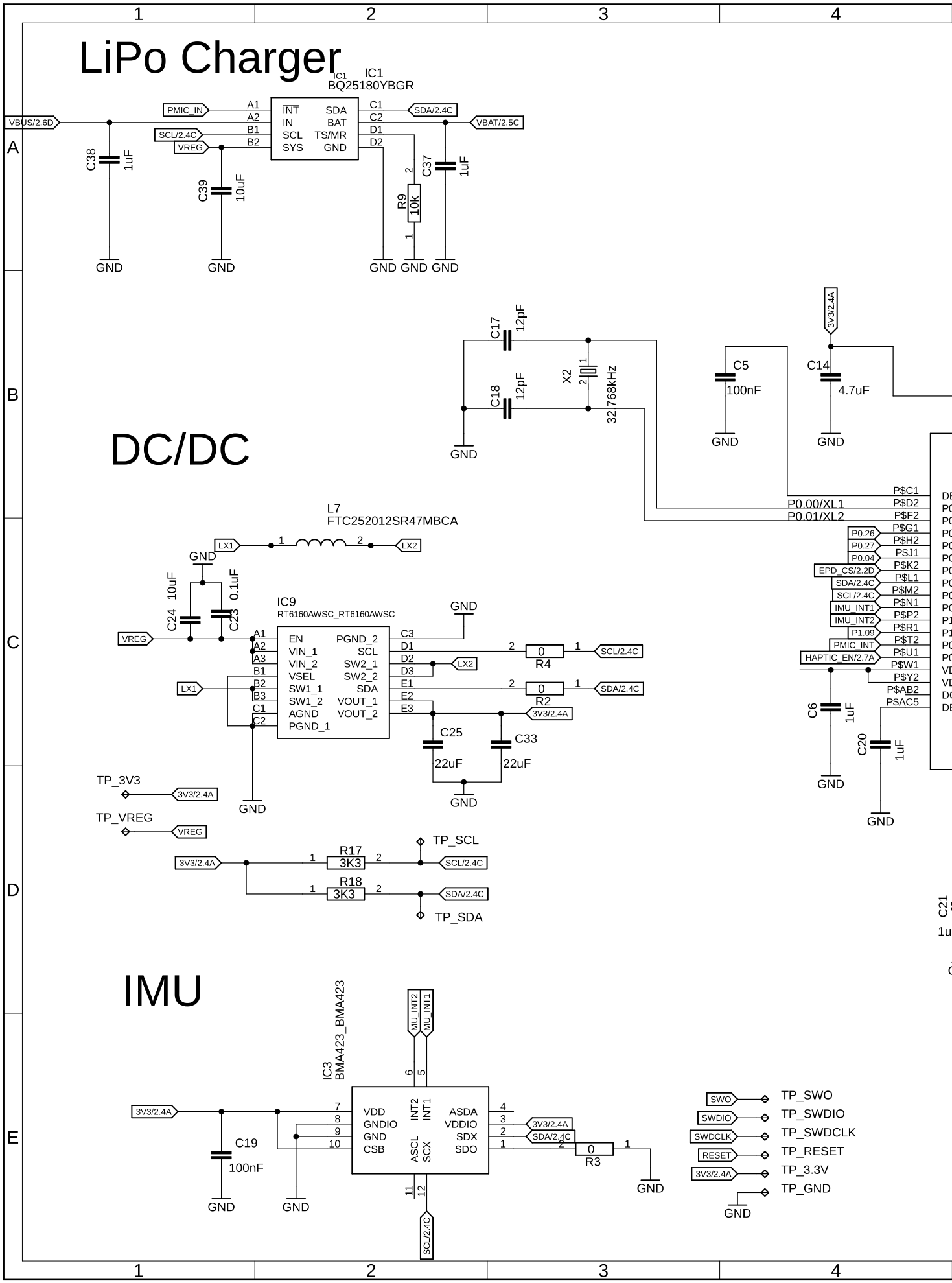
LiPo Charger
IC1
BQ25180YBGR
PMIC_IN
VBUS/2.6D
SCL/2.4C
VREG
INT
IN
SCL
SYS
SDA
BAT
TS/MR
GND
SDA/2.4C
VBAT/2.5C
C38
1uF
C39
10uF
R9
10K
C37
1uF
DC/DC
C17
12pF
C18
12pF
X2
32.768kHz
C5
100nF
C14
4.7uF
3V3/2.4A
L7
FTC252012SR47MBCA
LX1
LX2
C24
10uF
C23
0.1uF
IC9
RT6160AWSC_RT6160AWSC
EN
VIN_1
VIN_2
VSEL
SW1_1
SW1_2
AGND
PGND_1
PGND_2
SW2_1
SW2_2
VOUT_1
VOUT_2
R4
R2
C25
22uF
C33
22uF
TP_3V3
TP_VREG
R17
3K3
R18
3K3
TP_SCL
TP_SDA
P0.00/XL1
P0.01/XL2
P0.26
P0.27
P0.04
EPD_CS/2.2D
IMU_INT1
IMU_INT2
P1.09
PMIC_INT
HAPTIC_EN/2.7A
C6
1uF
C20
1uF
IMU
IC3
BMA423_BMA423
MU_INT2
MU_INT1
VDD
GNDIO
GND
CSB
INT2
INT1
ASCL
SCX
ASDA
VDDIO
SDX
SDO
C19
100nF
R3
SWO
SWDIO
SWDCLK
RESET
TP_SWO
TP_SWDIO
TP_SWDCLK
TP_RESET
TP_3.3V
TP_GND

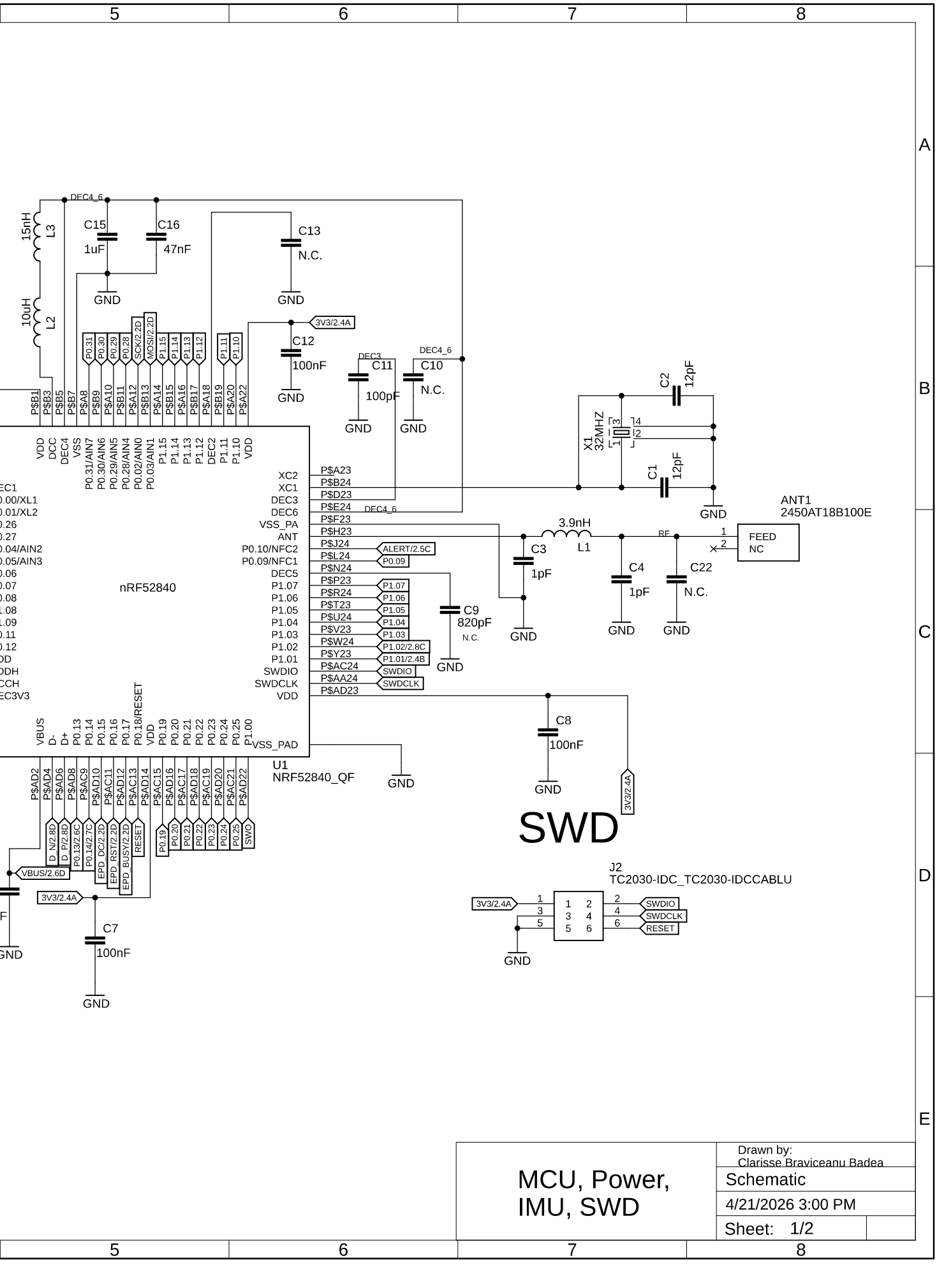

MCU, Power, IMU, SWD	Drawn by: Clarisse Braviceanu Badea
	Schematic
	4/21/2026 3:00 PM
	Sheet: 1/2

E-Paper Drive Circuit

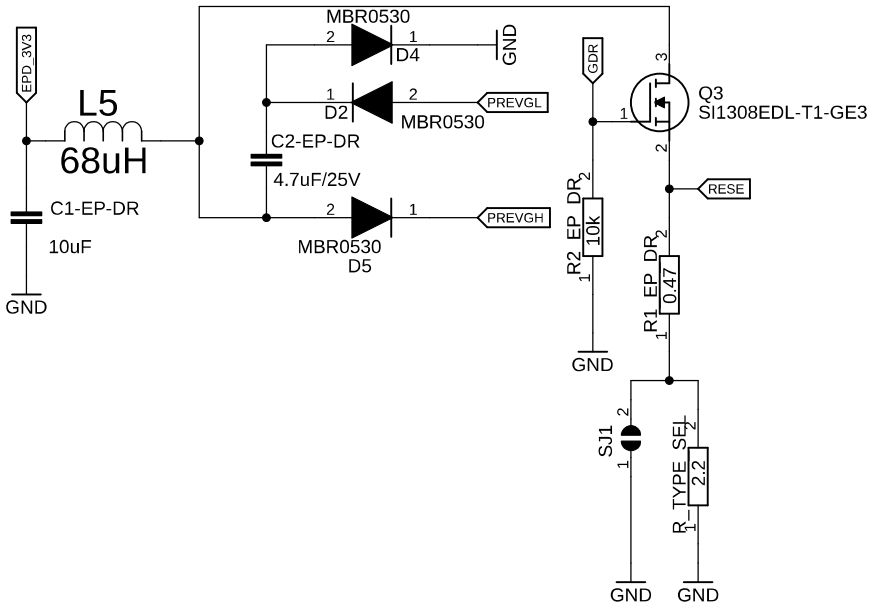

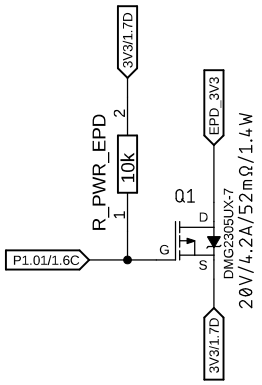

E-Paper Display Connector

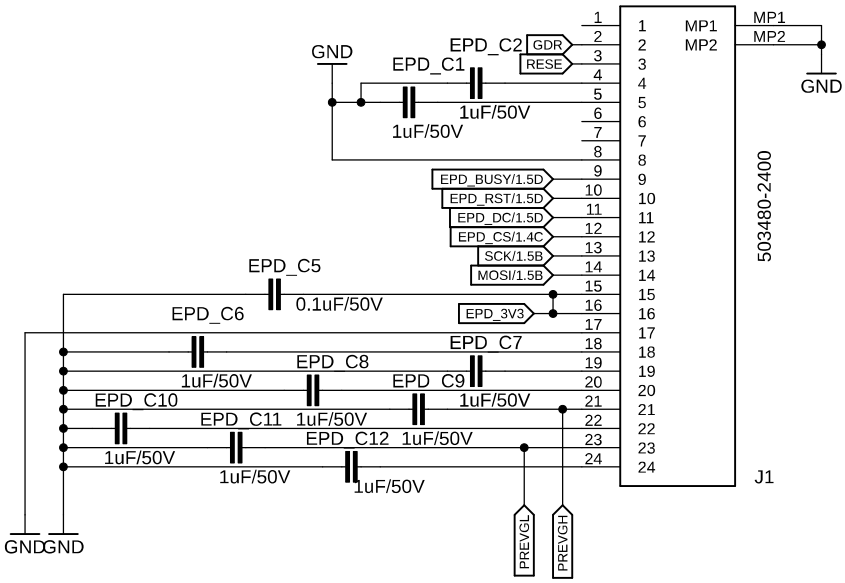

Fu

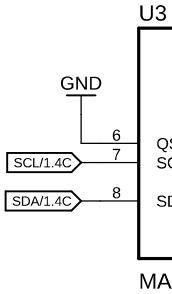

US
Pro

Haptic Driver

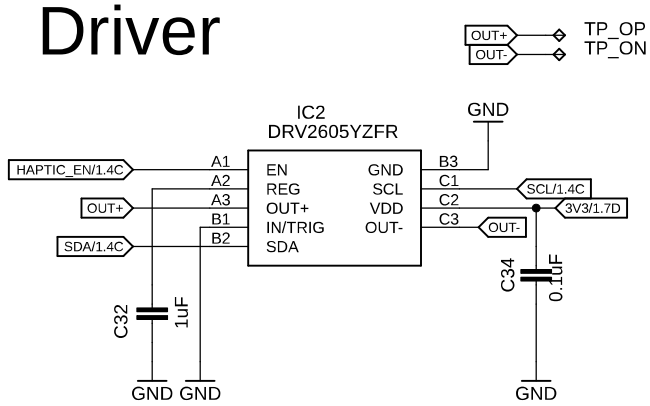

uel Gauge

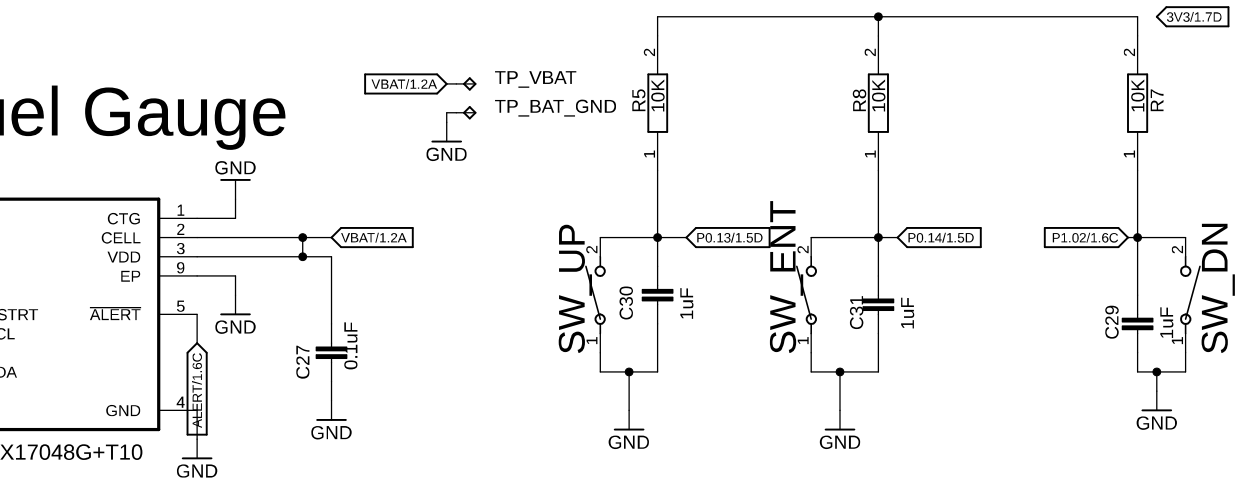

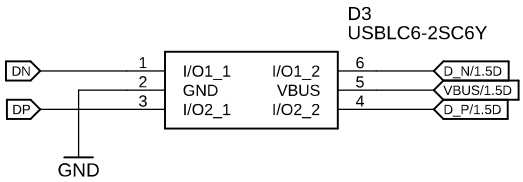

SB C Connector & ESD otection

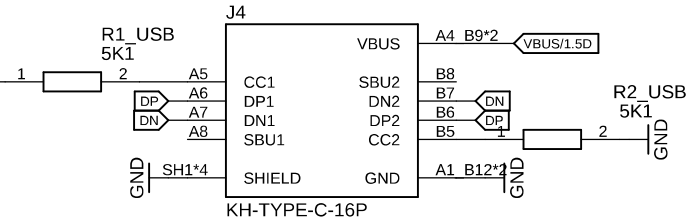

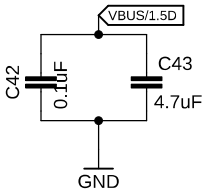

E-Paper & Peripherals	Drawn by: Clarisse Braviceanu Badea
	Schematic
	4/21/2026 3:00 PM
	Sheet: 2/2