THIS DOCUMENT AND THE DATA DISCLOSED HEREIN OR HEREWITH IS THE PROPERTY OF ALTIUM LIMITED AND MAY BE FREELY DISTRIBUTED IN WHOLE. NO RIGHTS ARE RESERVED OR EXPRESS OR IMPLIED WARANTEE GIVEN.

DWG. NO.	REV	SHT.
		*

REVISION	DESCRIPTION	DATE	APPROVED

Voltage Regulation Circuit

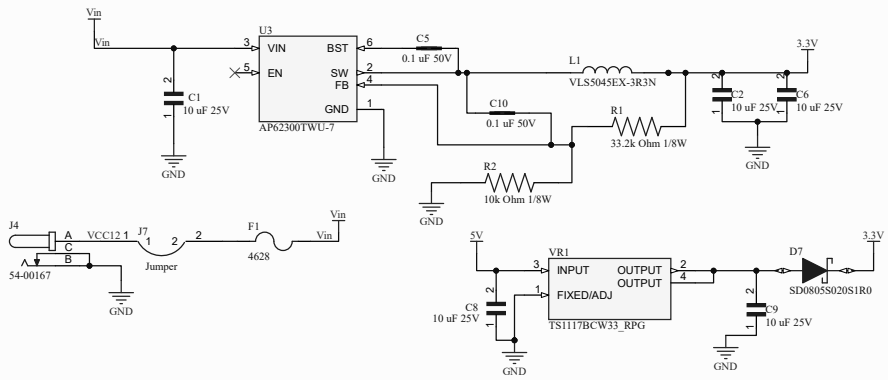

Switches

Debug

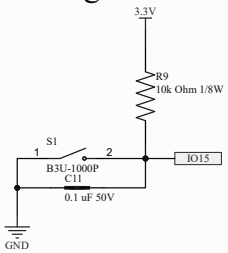

Reset

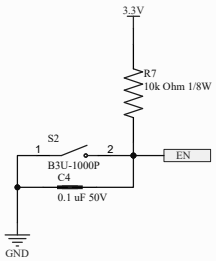

Boot

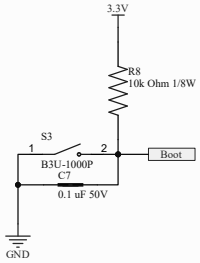

Debug LED

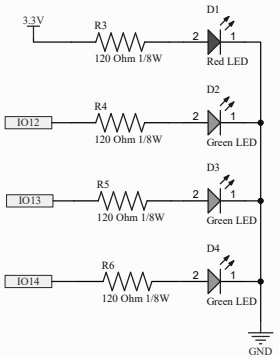

UART Connectors

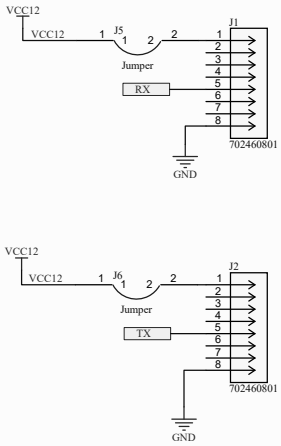

ESP32

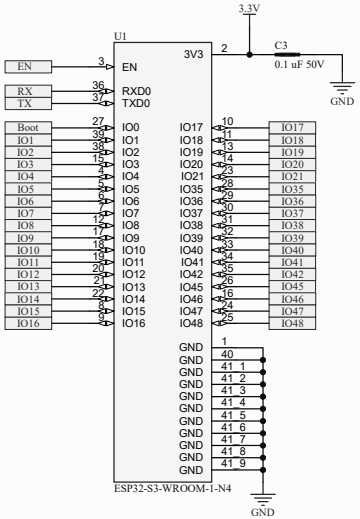

Headers

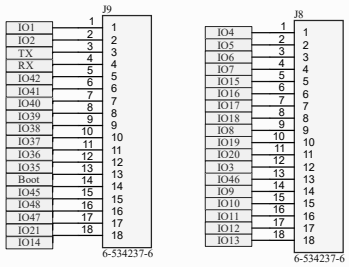

USB Connector

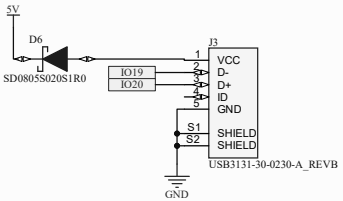

Testpoints

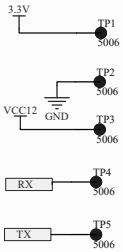

APPROVALS		DATE
ENG:	CC	03/21/25
DSN:	CC	03/21/25
CHK:	CC	03/21/25
REFERENCE DOCUMENTS		
BOM:		
ASSY DWG:		
FAB DWG:		
PCB DWG:		

PROJECT: 314

Altium

PROJECT REVISION: 61d8109b085abfdee4e0f7e8d0ecb2320

DOCUMENT REVISION: 61d8109b085abfdee4e0f7e8d0ecb2320

DESIGN ITEM ID: 61d8109b085abfdee4e0f7e8d0ecb2320

TITLE: EGR314-Wifi-Board

SIZE	CAGE CODE	DWG NO.	REV
B			

SCALE:

FILE NAME: EGR314-Wifi-Board.SchDoc

SHEET * OF *