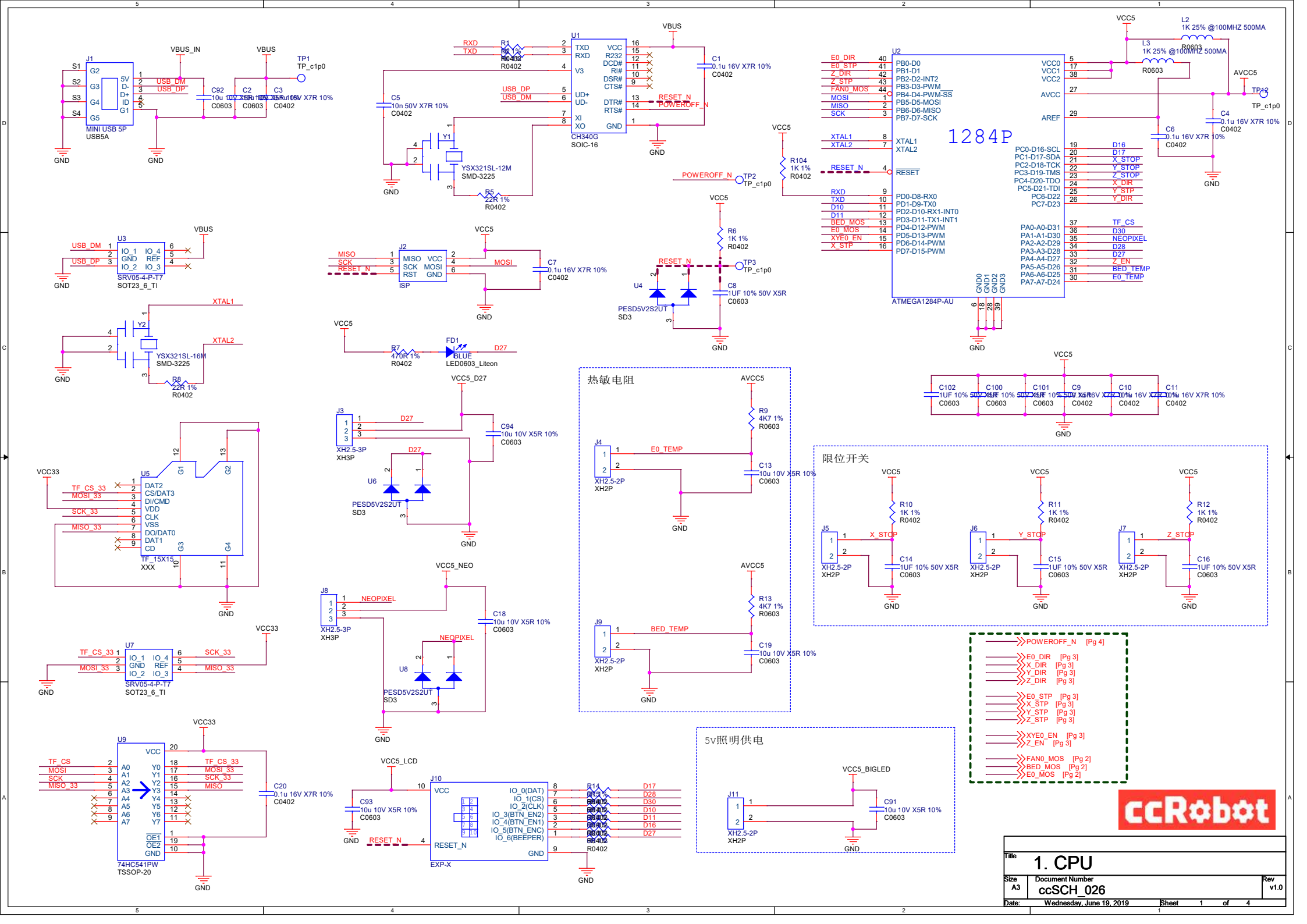
J1
MINI USB 5P
USB5A
VBUS_IN
VBUS
TP1
TP_c1p0
C92
10u 10V X5R 10%
C0603
C2
C3
C0402
GND
U1
CH340G
SOIC-16
TXD
RXD
V3
UD+
UD-
XI
XO
VCC
R232
DCD#
RI#
DSR#
CTS#
DTR#
RTS#
GND
RESET_N
POWEROFF_N
USB_DP
USB_DM
C5
10n 50V X7R 10%
Y1
YSX321SL-12M
SMD-3225
R5
22R 1%
R0402
C1
0.1u 16V X7R 10%
U2
ATMEGA1284P-AU
1284P
PB0-D0
PB1-D1
PB2-D2-INT2
PB3-D3-PWM
PB4-D4-PWM-SS
PB5-D5-MOSI
PB6-D6-MISO
PB7-D7-SCK
XTAL1
XTAL2
RESET
PD0-D8-RX0
PD1-D9-TX0
PD2-D10-RX1-INT0
PD3-D11-TX1-INT1
PD4-D12-PWM
PD5-D13-PWM
PD6-D14-PWM
PD7-D15-PWM
PC0-D16-SCL
PC1-D17-SDA
PC2-D18-TCK
PC3-D19-TMS
PC4-D20-TDO
PC5-D21-TDI
PC6-D22
PC7-D23
PA0-A0-D31
PA1-A1-D30
PA2-A2-D29
PA3-A3-D28
PA4-A4-D27
PA5-A5-D26
PA6-A6-D25
PA7-A7-D24
VCC0
VCC1
VCC2
AVCC
AREF
GND0
GND1
GND2
GND3
E0_DIR
E0_STP
Z_DIR
Z_STP
FAN0_MOS
MOSI
MISO
SCK
D16
D17
X_STOP
Y_STOP
Z_STOP
X_DIR
Y_STP
Y_DIR
TF_CS
D30
NEOPIXEL
D28
D27
Z_EN
BED_TEMP
E0_TEMP
XYE0_EN
X_STP
L2
1K 25% @100MHZ 500MA
L3
1K 25% @100MHZ 500MA
R0603
AVCC5
TP12
C4
0.1u 16V X7R 10%
C6
0.1u 16V X7R 10%
C0402
R104
1K 1%
R0402
TP2
R6
1K 1%
TP3
U4
PESD5V2S2UT
SD3
C8
1UF 10% 50V X5R
C0603
U3
SRV05-4-P-T7
SOT23_6_TI
IO_1
IO_4
IO_2
IO_3
REF
J2
ISP
MISO
SCK
RST
MOSI
C7
0.1u 16V X7R 10%
XTAL1
XTAL2
Y2
YSX321SL-16M
SMD-3225
R8
22R 1%
R7
470R 1%
FD1
BLUE
LED0603_Liteon
D27
C102
C100
C101
C9
C10
C11
1UF 10% 50V X5R
0.1u 16V X7R 10%
C0603
C0402
热敏电阻
J3
XH2.5-3P
XH3P
U6
C94
10u 10V X5R 10%
J4
XH2.5-2P
XH2P
R9
4K7 1%
R0603
C13
10u 10V X5R 10%
J9
R13
4K7 1%
C19
10u 10V X5R 10%
限位开关
J5
J6
J7
R10
1K 1%
R11
1K 1%
R12
1K 1%
C14
1UF 10% 50V X5R
C15
C16
X_STOP
Y_STOP
Z_STOP
U5
TF_15X15
XXX
DAT2
CS/DAT3
DI/CMD
VDD
CLK
VSS
DO/DAT0
DAT1
CD
TF_CS_33
MOSI_33
SCK_33
MISO_33
VCC33
U7
SRV05-4-P-T7
SOT23_6_TI
J8
XH2.5-3P
XH3P
U8
C18
10u 10V X5R 10%
U9
74HC541PW
TSSOP-20
VCC
A0
A1
A2
A3
A4
A5
A6
A7
Y0
Y1
Y2
Y3
Y4
Y5
Y6
Y7
OE1
OE2
TF_CS
MOSI
SCK
MISO
C20
0.1u 16V X7R 10%
C0402
J10
EXP-X
VCC5_LCD
C93
10u 10V X5R 10%
RESET_N
IO_0(DAT)
IO_1(CS)
IO_2(CLK)
IO_3(BTN_EN2)
IO_4(BTN_EN1)
IO_5(BTN_ENC)
IO_6(BEEPER)
R14
D17
D28
D30
D10
D11
D16
D27
5V照明供电
J11
VCC5_BIGLED
C91
10u 10V X5R 10%
POWEROFF_N [Pg 4]
E0_DIR [Pg 3]
X_DIR [Pg 3]
Y_DIR [Pg 3]
Z_DIR [Pg 3]
E0_STP [Pg 3]
X_STP [Pg 3]
Y_STP [Pg 3]
Z_STP [Pg 3]
XYE0_EN [Pg 3]
Z_EN [Pg 3]
FAN0_MOS [Pg 2]
BED_MOS [Pg 2]
E0_MOS [Pg 2]
ccRobot
Title
1. CPU
Size
A3
Document Number
ccSCH_026
Rev
v1.0
Date:
Wednesday, June 19, 2019
Sheet
1
of
4

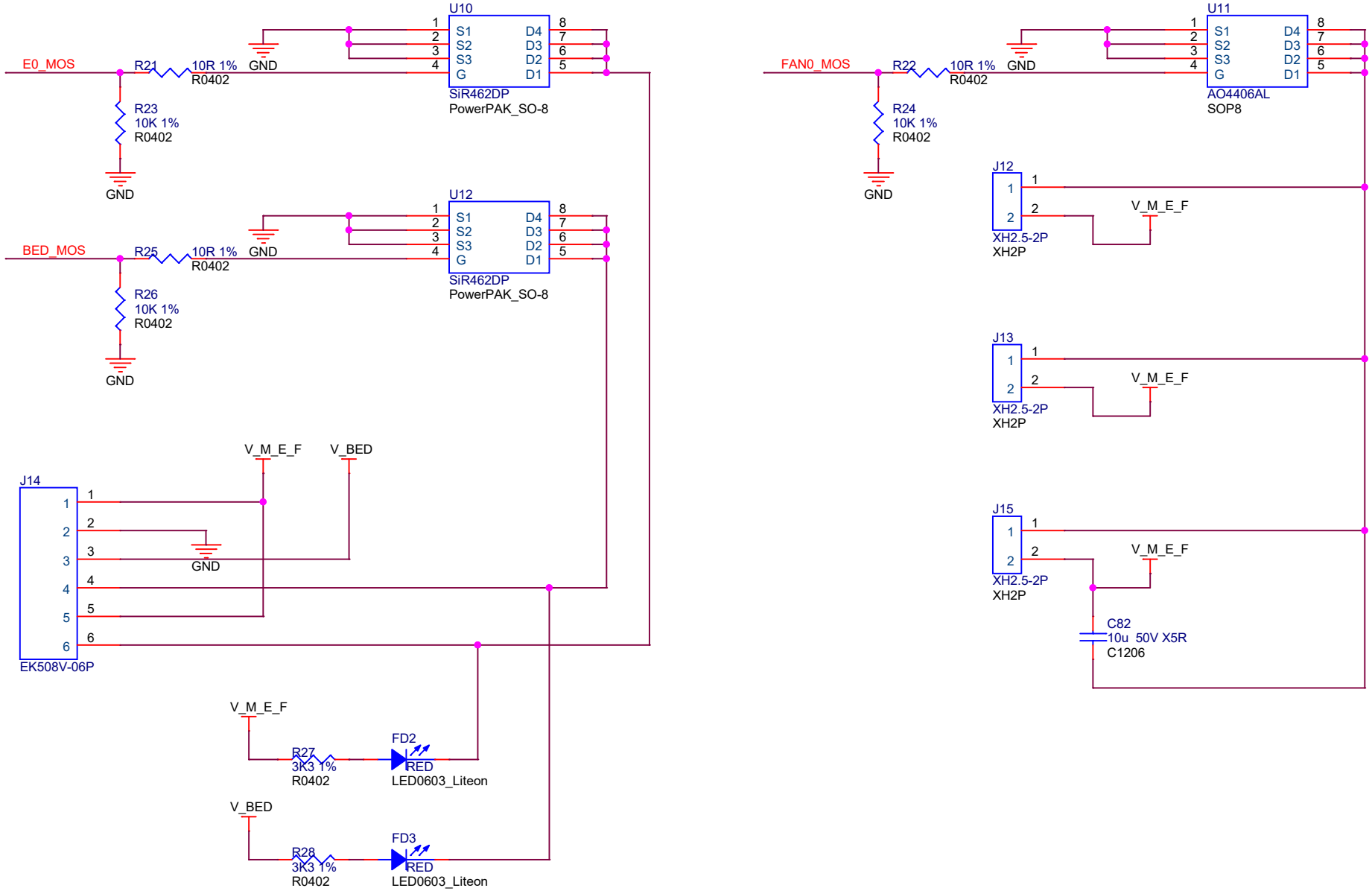

Title	2. MOSFET	
Size A4	Document Number ccSCH_026	Rev v1.0
Date: Wednesday, June 19, 2019	Sheet 2 of 4	

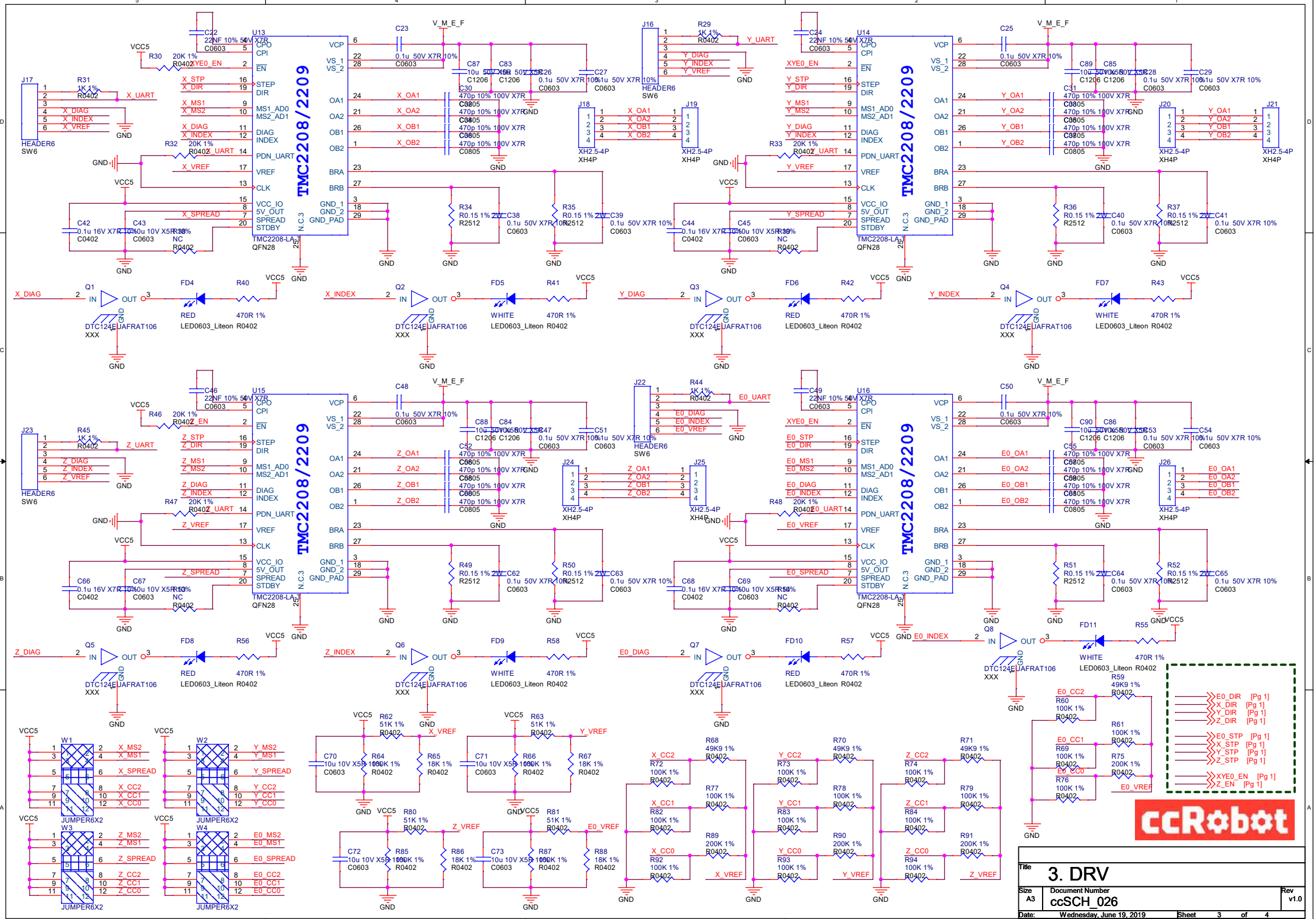
TMC2208/2209
TMC2208-LA
QFN28
HEADER6
SW6
XH2.5-4P
XH4P
DTC124EUAFRAT106
LED0603_Liteon R0402
JUMPER6X2
ccRobot
Title
3. DRV
Size
A3
Document Number
ccSCH_026
Rev
v1.0
Date:
Wednesday, June 19, 2019
Sheet
3
of
4

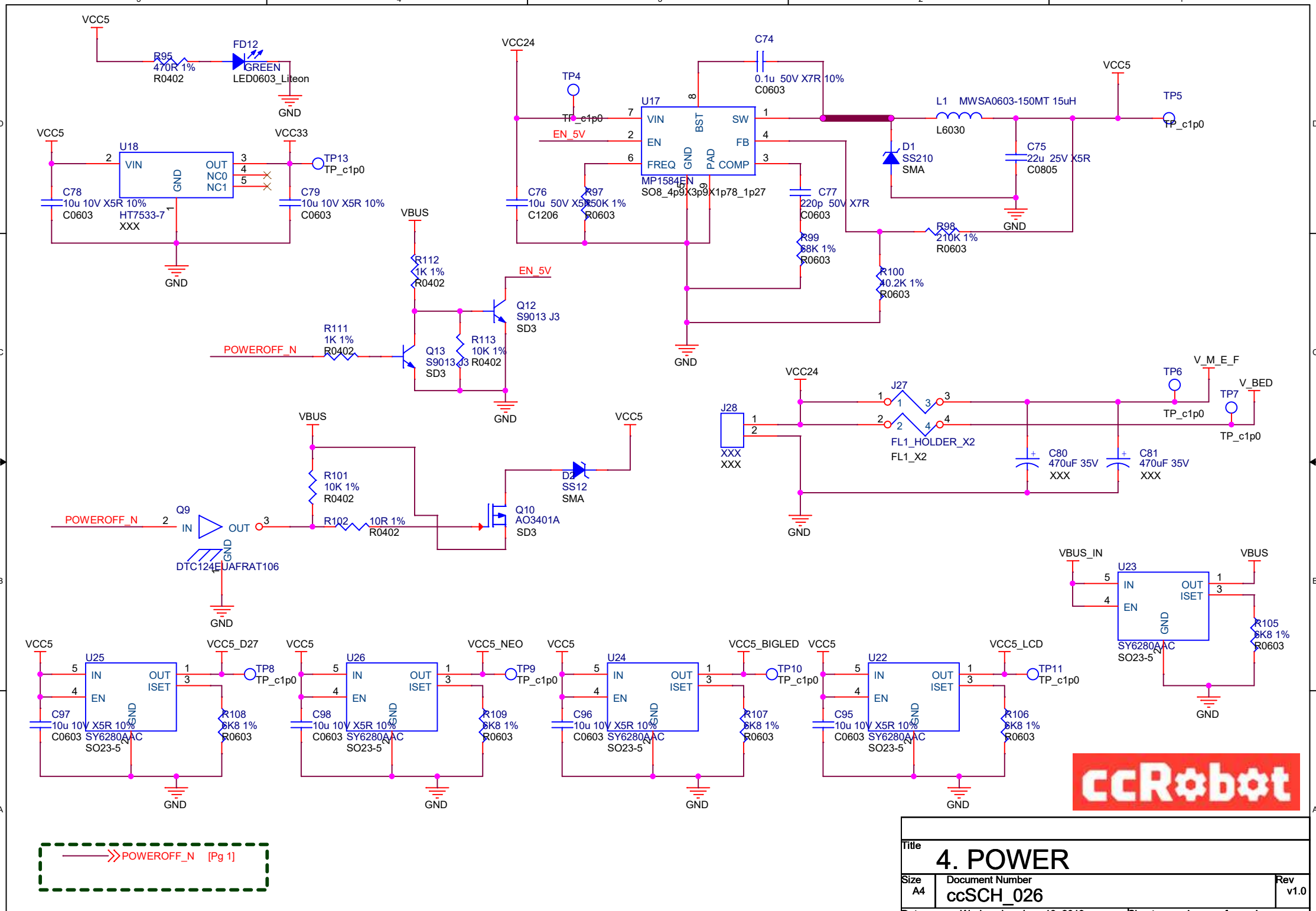

Title
4. POWER

Size	Document Number	Rev
A4	ccSCH_026	v1.0

Date: Wednesday, June 19, 2019 Sheet 4 of 4