Chapter #4: Diodes

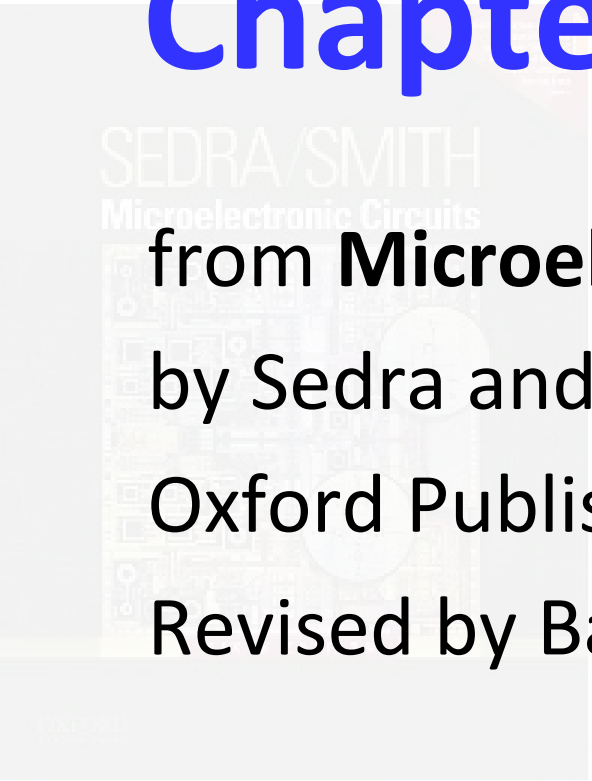

from **Microelectronic Circuits** Text

by Sedra and Smith

Oxford Publishing

Revised by Bao Jingfu

Introduction

- **IN THIS CHAPTER WE WILL LEARN**
  - the characteristics of the ideal diode and how to analyze and design circuits containing multiple ideal diodes together with resistors and dc sources to realize useful and interesting nonlinear function
  - the details of the i-v characteristic of the junction diode (which was derived in Chapter 3) and how to use it to analyze diode circuits operating in the various bias regions: forward, reverse, and breakdown
  - a simple but effective model of the diode i-v characteristic in the forward direction: the constant-voltage-drop model

Introduction

- A powerful technique for the application and modeling of the diode (and in later chapters, transistors): dc-biasing the diode and modeling its operation for small signals around the dc-operating point by means of the small-signal model
- The use of a string of forward-biased diodes and of diodes operating in the breakdown region (zener diodes), to provide constant dc voltages (voltage regulators)
- Aplication of the diode in the design of rectifier circuits, which convert ac voltages to dc as needed for powering electronic equipment

4.1.1. **Current-Voltage Characteristic of the Ideal Diode**

- **ideal diode** – most fundamental nonlinear circuit element
  - two terminal device
  - circuit symbol shown to right
  - operates in two modes
    - on and off
- **cathode** – negative terminal, from which current flows
- **anode** – positive terminal of diode, into which current flows

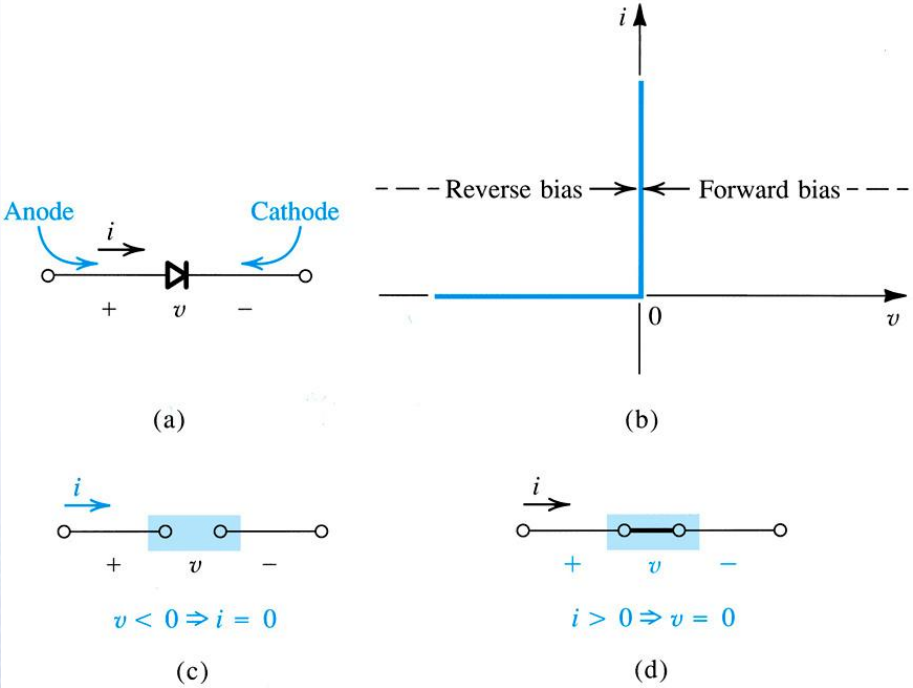

Figure 4.1: Diode characteristics

mode #2: reverse bias = open ckt.

mode #1: forward bias = short ckt

device symbol with two nodes

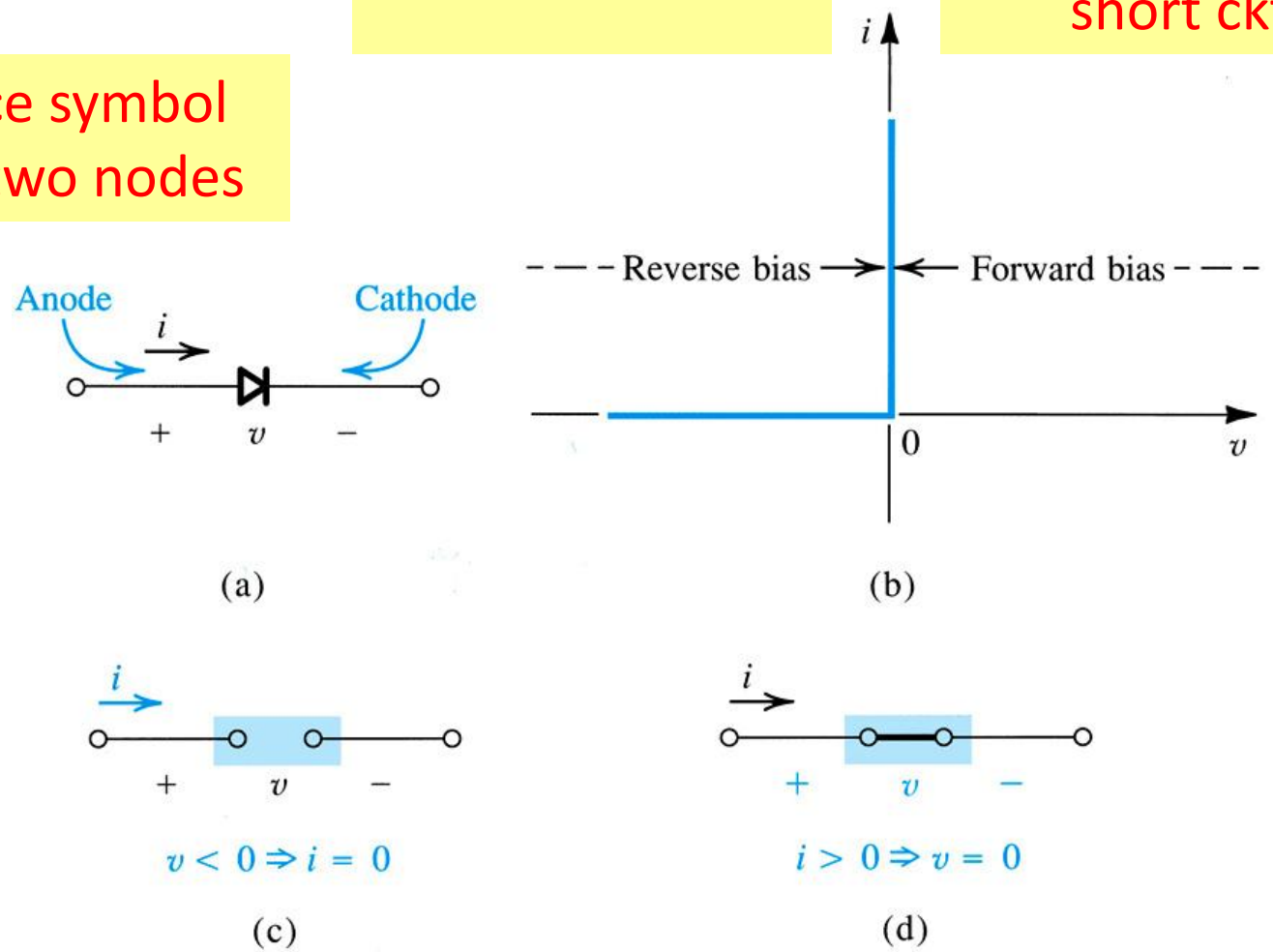

4.1.1. **Current-Voltage Characteristic**

- External circuit should be designed to limit…
  - current flow across conducting diode
  - voltage across blocking diode
- Examples are shown to right…

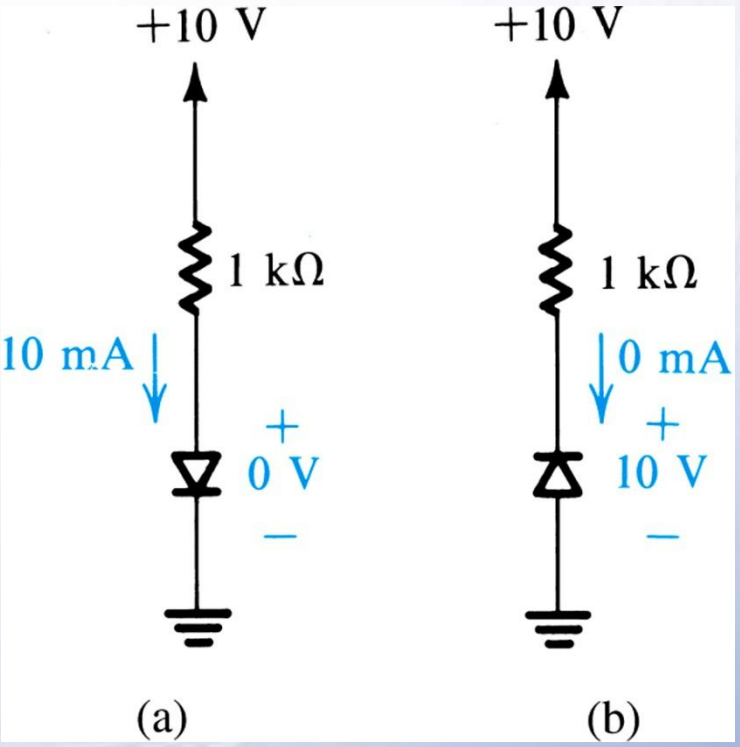

Figure 4.2: The two modes of operation of ideal diodes and the use of an external circuit to limit **(a)** the forward current and **(b)** the reverse voltage.

4.1.2: **A Simple Application – The Rectifier**

- One fundamental application of this piecewise linear behavior is the rectifier.
- **Q:** What is a **rectifier**?
  - **A:** Circuit which converts AC waves into DC…ideally with no loss.

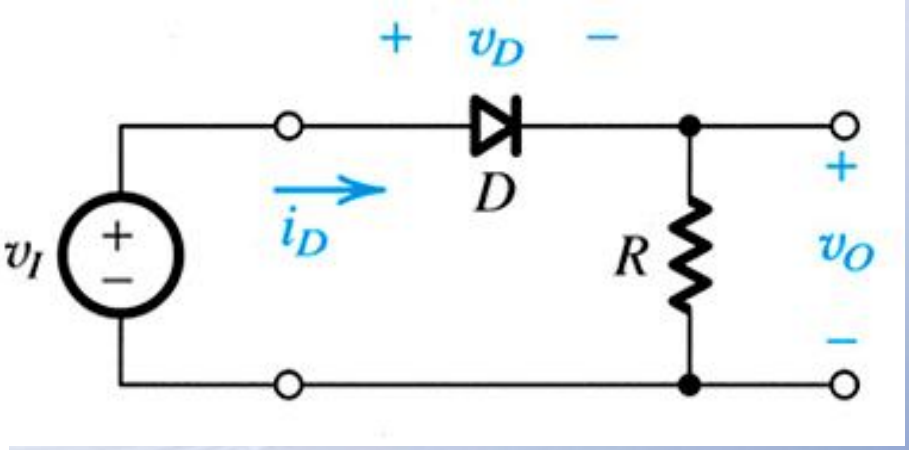

Figure 4.3(a): Rectifier Circuit

4.1.2: **A Simple Application – The Rectifier**

- This circuit is composed of diode and series resistor.
- **Q:** How does this circuit operate?
  - **A:** The diode blocks reverse current flow, preventing negative voltage across *R*.

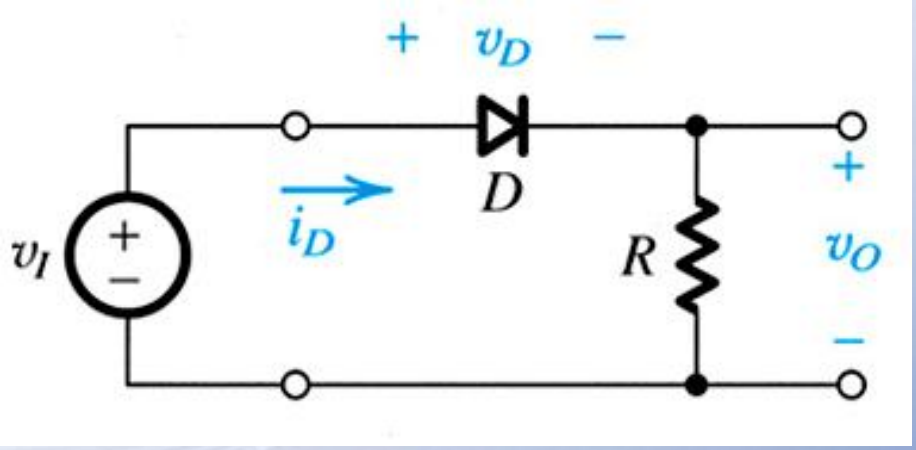

Figure 4.3(a): Rectifier Circuit

Example 4.1: Diode Rectifier

- Consider the circuit of Figure 4.4. A source (v_S) with peak amplitude of 24*V* is employed to charge a 12*V* dc-battery.
  - **Q(a):** Find the fraction of each cycle during which the diode conducts.
  - **Q(b):** Find peak value of diode current and maximum reverse-bias voltage that appears across the diode.

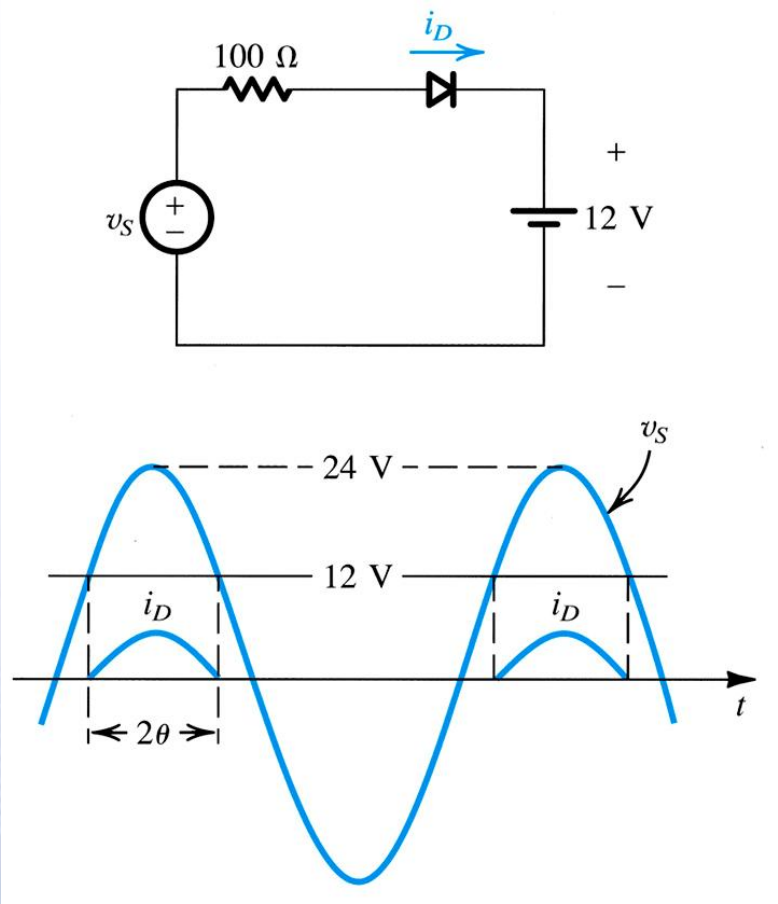

Figure 4.4: Circuit and Waveforms for Example 4.1.

4.2. **Terminal Characteristics of Junction Diodes**

discontinuity caused by differences in scale

- Most common implementation of a diode utilizes PN junction.
- *I-V* curve consists of three characteristic regions
  - forward bias: $v > 0$
  - reverse bias: $v < 0$
  - breakdown: $v << 0$

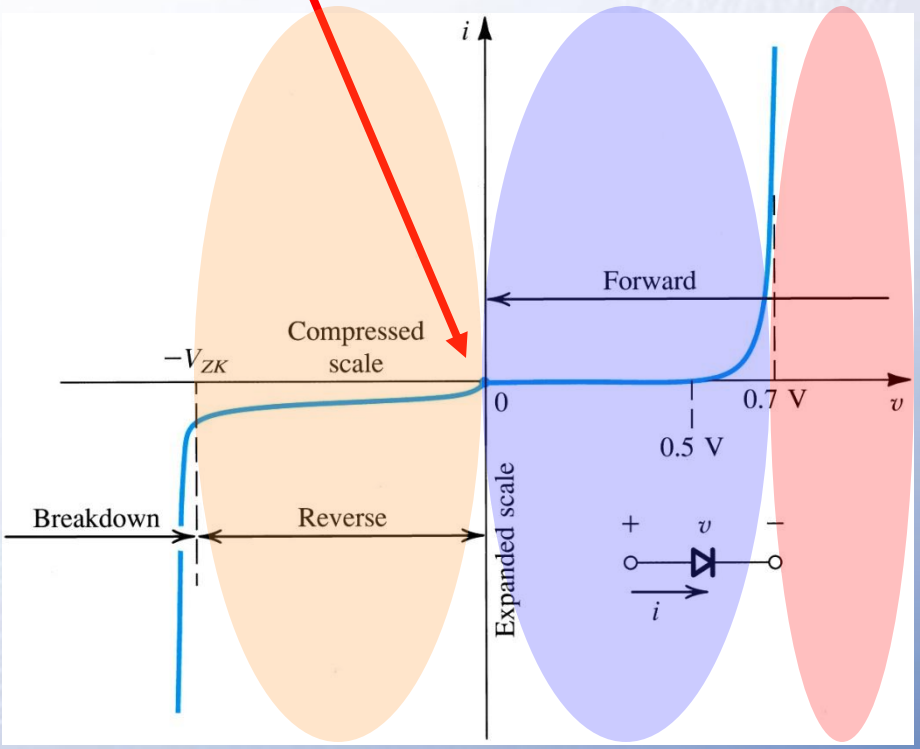

4.2.1. The Forward-Bias Region

- The forward-bias region of operation is entered when $v > 0$.
- *I-V* relationship is closely approximated by equations to right.

I_S = constant for diode at given temperature (aka. saturation current)

$$\text{(eq4.1)}\ i = I_S\left(e^{v/V_T} - 1\right)$$

V_T = thermal voltage
k = Boltzmann's constant (8.62E-5 eV/K)
q = magnitude of electron charge (1.6E-19 C)

$$\text{(eq4.2)}\ V_T = \frac{kT}{q} = \underbrace{25.8mV}_{\text{at room temperature}}$$

(4.3) is a simplification suitable for large v

I_S = constant for diode at given temperature (aka. saturation current)

$$\text{(eq4.3)}\ i = I_S e^{v/V_T}$$

$$\text{(eq4.4)}\ v = V_T \ln\left(\frac{i}{I_S}\right)$$

4.2.1: **The Forward-Bias Region**

- **cut-in voltage** – is voltage, below which, minimal current flows
  - approximately 0.5V
- **fully conducting region** – is region in which R_{diode} is approximately equal 0
  - between 0.6 and 0.8*V*

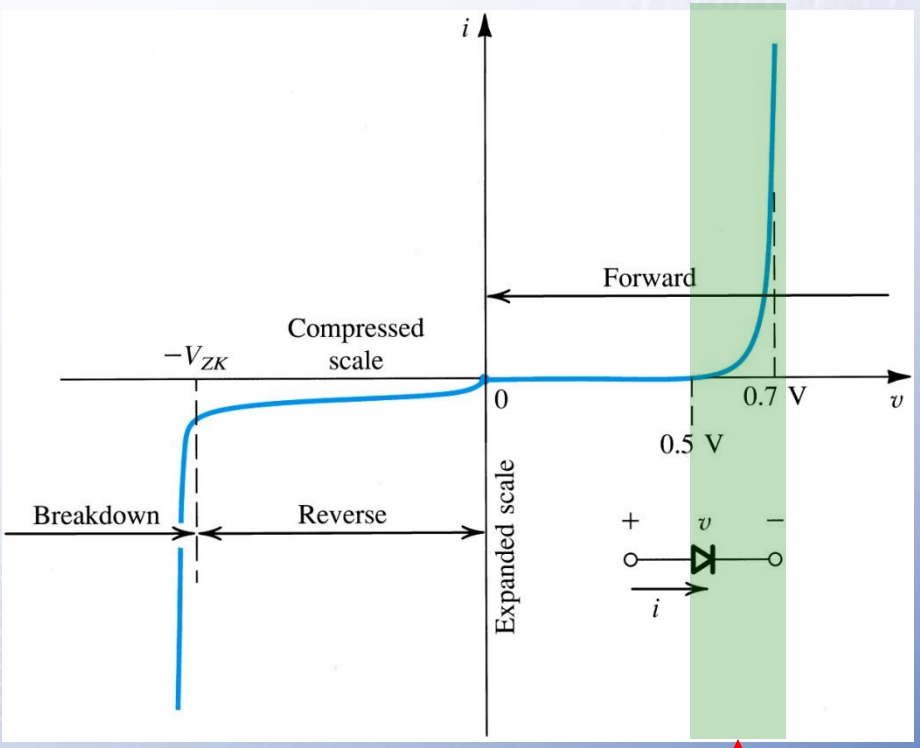

fully conducting region

4.2.2. **The Reverse-Bias Region**

- The reverse-bias region of operation is entered when $v < 0$.
- *I-V* relationship, for negative voltages with $|v| > V_T$ (25*mV*), is closely approximated by equations to right.

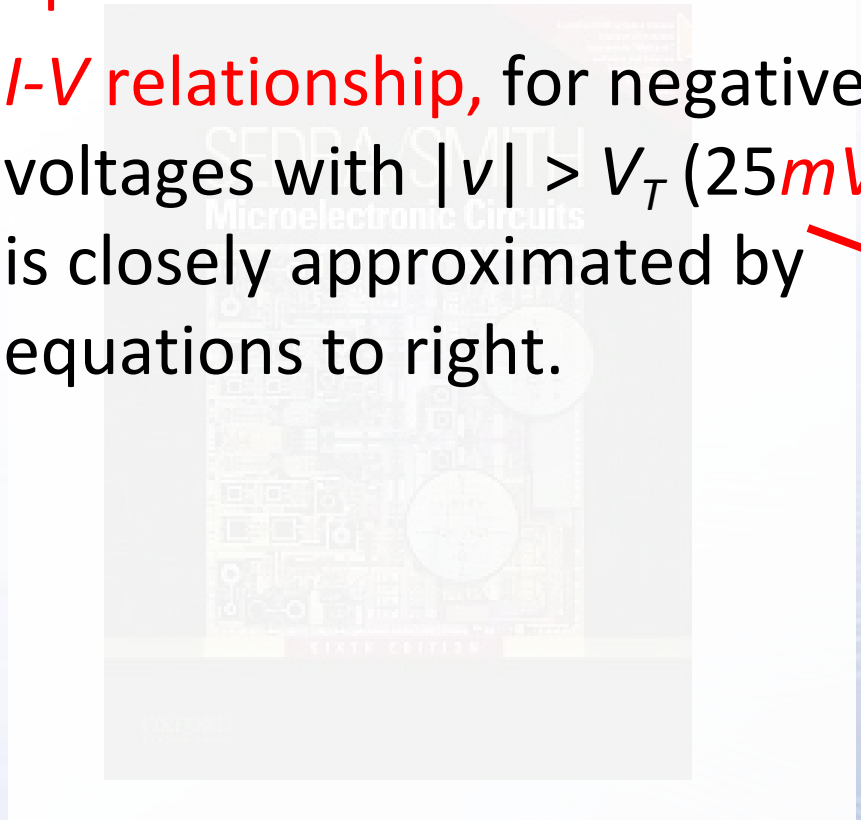

this expression applies for negative voltages

$$i = I_S\left(e^{-|v|/V_T} - 1\right)$$

action: invert exponential

$$i = I_S\left(e^{-|v|/V_T} - 1\right)$$

≈1 for larger voltage magnitudes

$$i = -I_S$$

4.2.3. The Breakdown Region

- The breakdown region of operation is entered when $v < V_{ZK}$.
  - **Zener-Knee Voltage (V_{ZK})**
- This is normally non-destructive.

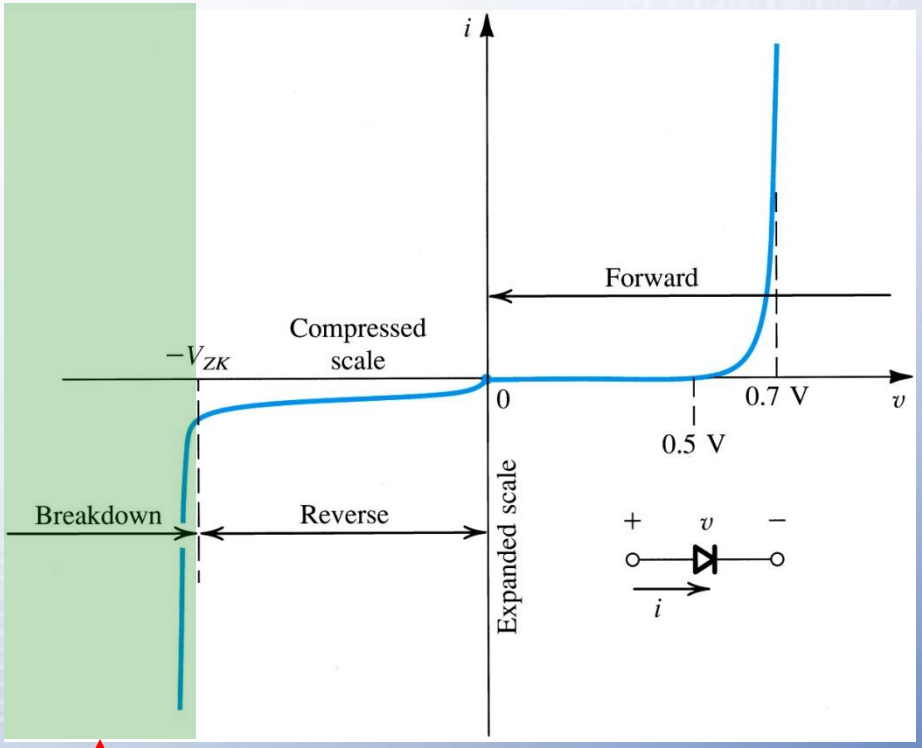

breakdown region

$$i = I_S(e^{v/V_T} - 1)$$

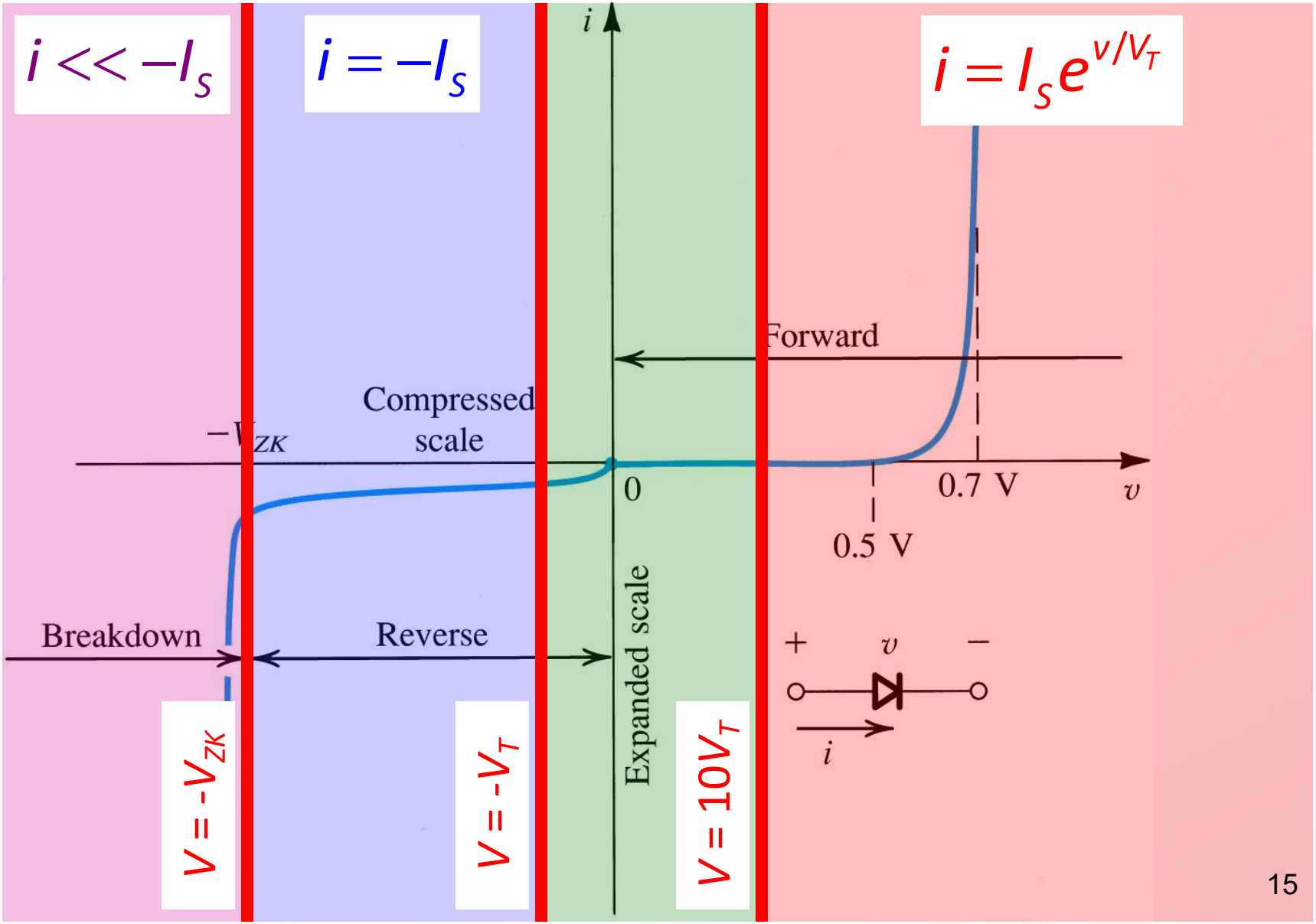
$i << -I_S$
$i = -I_S$
$i = I_S e^{v/V_T}$
i
Forward
Compressed scale
$-V_{ZK}$
0
0.7 V
v
0.5 V
Breakdown
Reverse
Expanded scale
+
v
−
i
$V = -V_{ZK}$
$V = -V_T$
$V = 10V_T$

4.3. **Modeling the Diode Forward Characteristic**

- The previous slides define a robust set of diode models.
- Upcoming slides, however, discuss simplified diode models better suited for use in circuit analyses:
  - exponential model
  - constant voltage-drop model
  - ideal diode model
  - small-signal (linearization) model

4.3.1. **The Exponential Model**

- **exponential diode model**
  - most accurate
  - most difficult to employ in circuit analysis
    - due to nonlinear nature

$$I_D = I_S e^{V_D/V_T} \qquad (4.6)$$

V_D = voltage across diode
I_D = current through diode

4.3.1. **The Exponential Model**

- **Q:** How does one solve for I_D in circuit to right?
  - $V_{DD} = 5V$
  - $R = 1kOhm$
  - $I_D = 1mA$ @ $0.7V$
- **A:** Two methods exist…
  - **graphical method**
  - **iterative method**

example 4.4

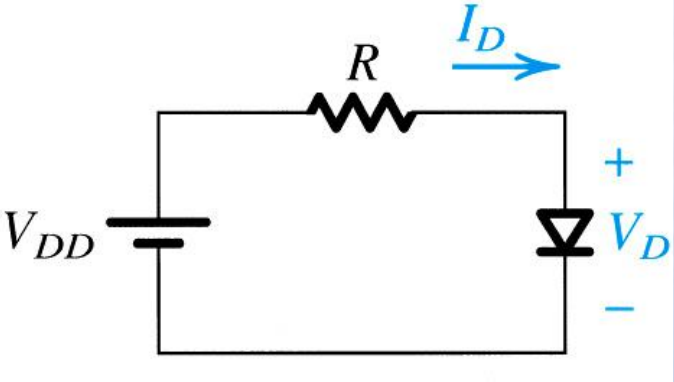

Figure 4.10: A simple circuit used to illustrate the analysis of circuits in which the diode is forward conducting.

$$\text{(eq4.7)}\ I_D = \frac{V_{DD} - V_D}{R}$$

4.3.2. **Graphical Analysis Using Exponential Model**

- **step #1:** Plot the relationships of (4.6) and (4.7) on single graph
- **step #2:** Find intersection of the two…
  - **load line** and diode characteristic intersect at **operating point**

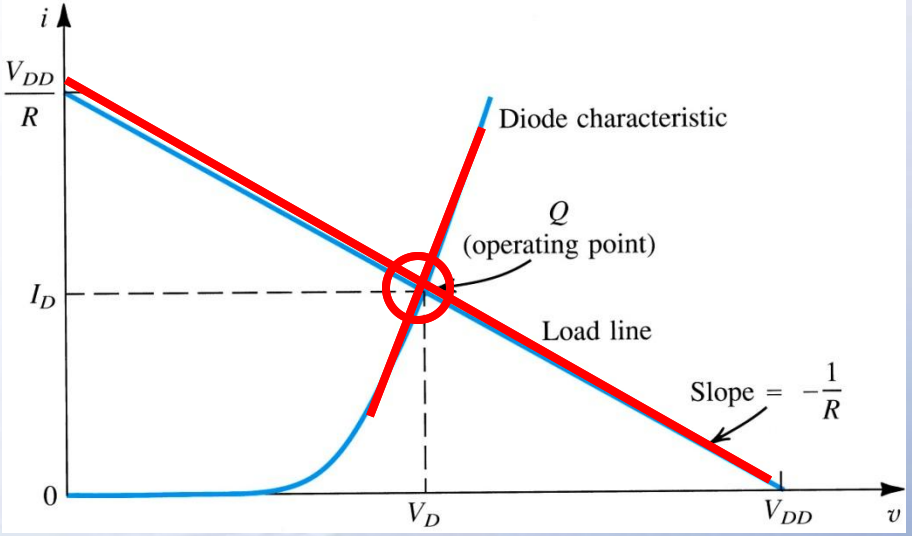

Figure 4.11: Graphical analysis of the circuit in Fig. 4.10 using the exponential diode model.

4.3.2. **Graphical Analysis Using Exponential Model**

- **Pro's**
  - Intuitive
    - b/c of visual nature
- **Con's**
  - Poor Precision
  - Not Practical for Complex Analyses
    - multiple lines required

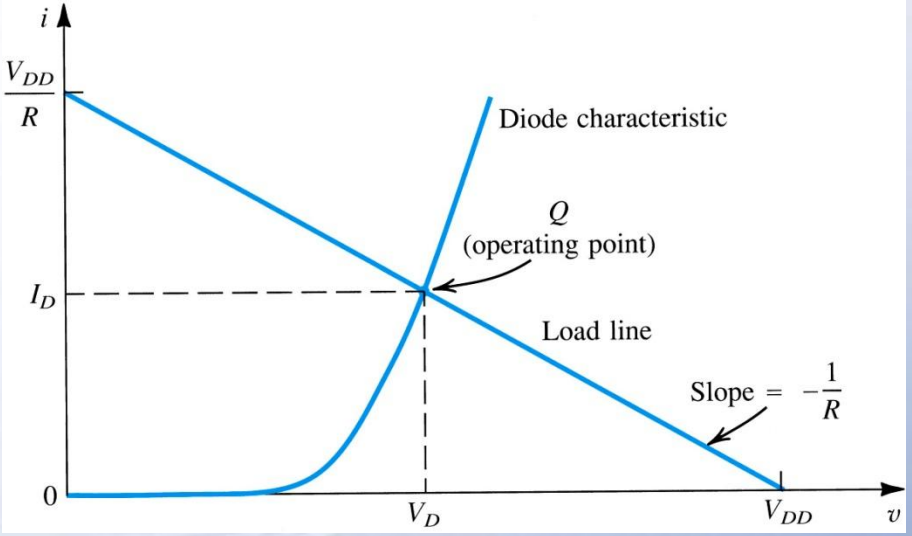

Figure 4.11: Graphical analysis of the circuit in Fig. 4.10 using the exponential diode model.

4.3.5. **The Constant Voltage-Drop Model**

- **Q:** How can one analyze these diode-based circuits more efficiently?
- **A:** Find a simpler model.
  - One example is assume that voltage drop across the diode is constant.

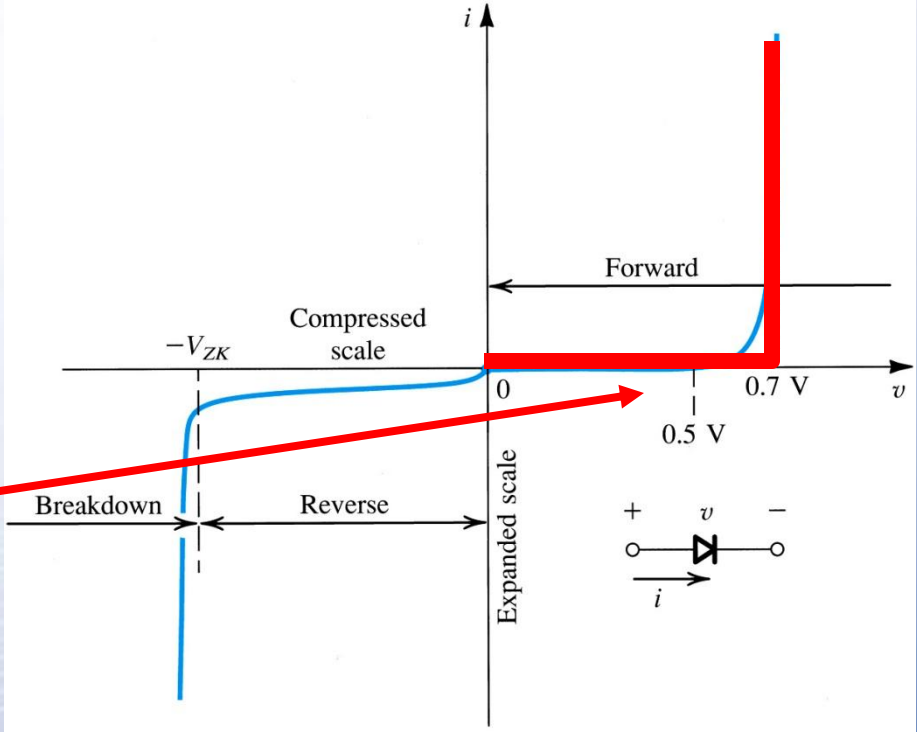

4.3.5. **The Constant Voltage-Drop Model**

- The **constant voltage-drop diode model** assumes that the slope of I_D vs. V_D is vertical @ 0.7V
- **Q:** How does example 4.4 solution change if CVDM is used?
  - **A:** 4.262mA to 4.3mA

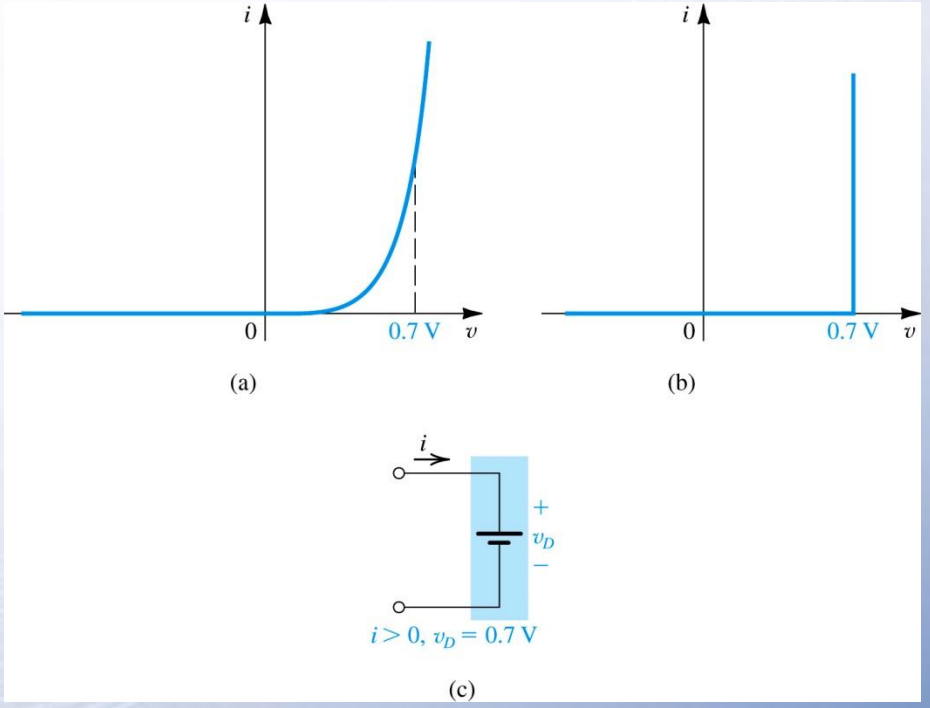

Figure 4.12: Development of the diode constant-voltage-drop model: **(a)** the…

4.3.6. **Ideal Diode Model**

- The **ideal diode model** assumes that the slope of I_D vs. V_D is vertical @ 0*V*
- **Q:** How does example 4.4 solution change if ideal model is used?
  - **A:** 4.262*mA* to 5*mA*

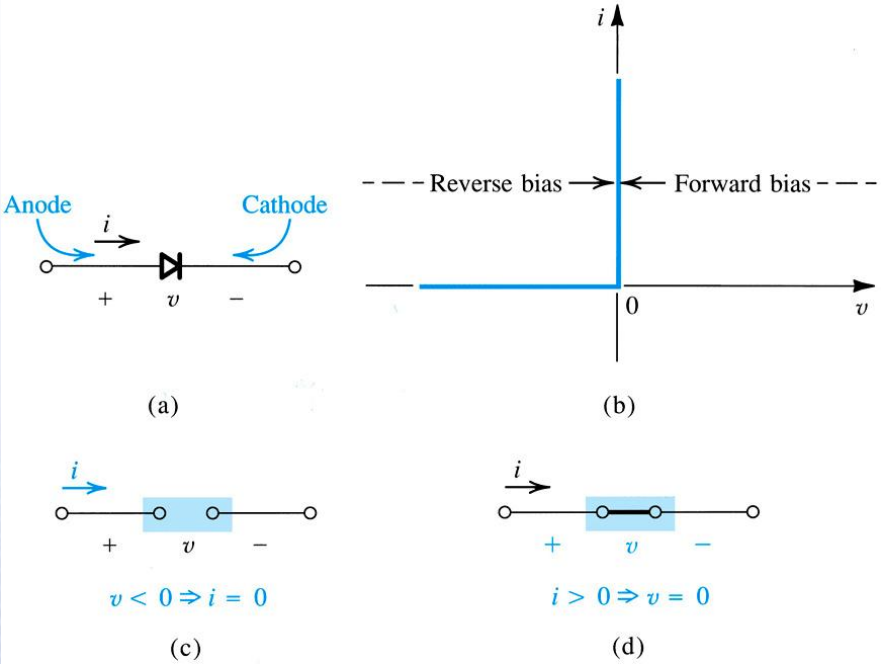

mode #2: reverse bias = open ckt.

mode #1: forward bias = short ckt

device symbol with two nodes

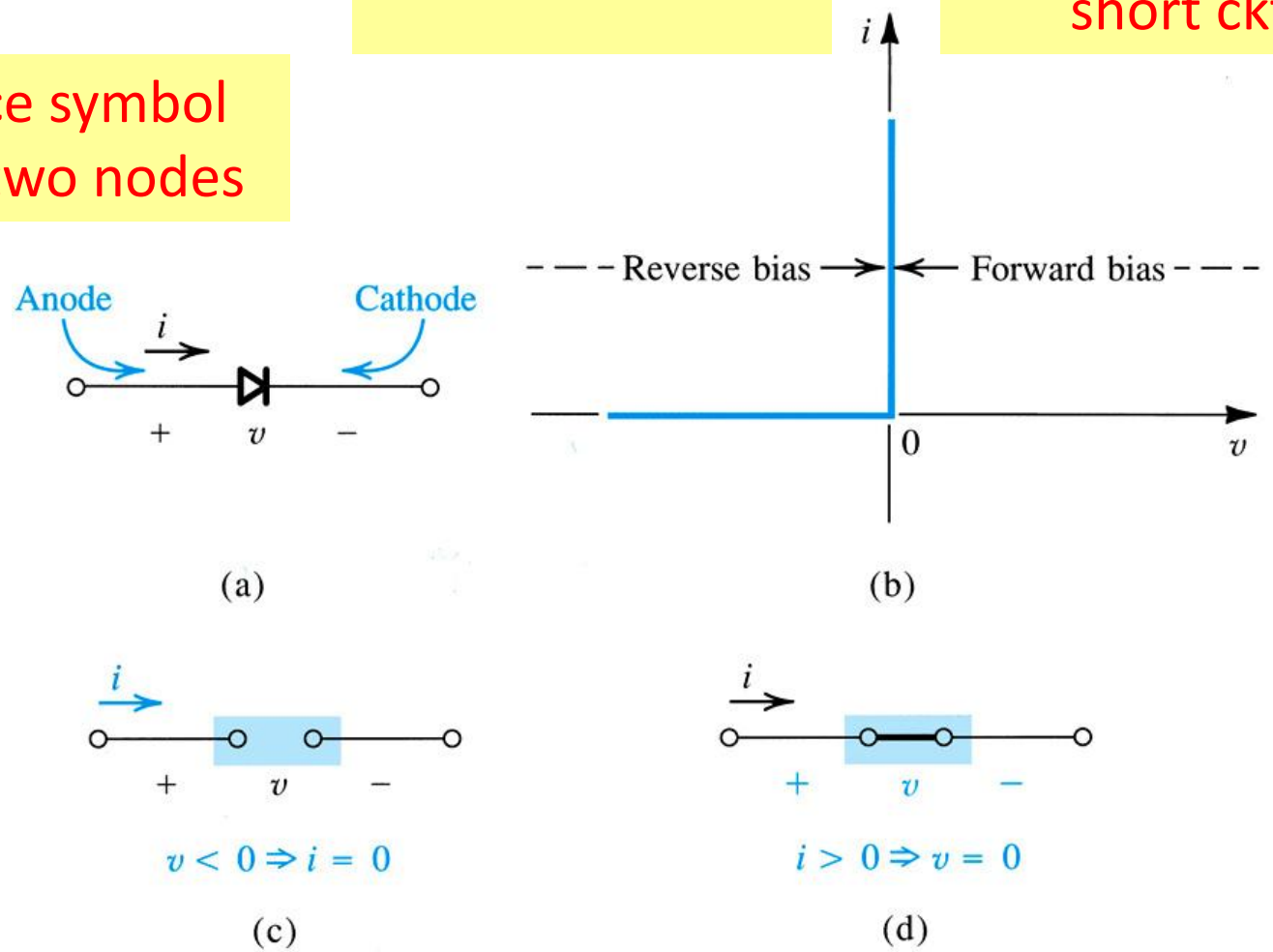

When to use these models?

- **exponential model**
  - low voltages
  - less complex circuits
  - emphasis on accuracy over practicality
- **constant voltage-drop mode**:
  - medium voltages = 0.7*V*
  - more complex circuits
  - emphasis on practicality over accuracy
- **ideal diode model**
  - high voltages >> 0.7*V*
  - very complex circuits
  - cases where a difference in voltage by 0.7*V* is negligible
- **small-signal model**
  - this is next…

4.3.7. **Small-Signal Model**

- **small-signal diode model**
  - Diode is modeled as variable resistor.
  - Whose value is defined via linearization of exponential model.
  - Around bias point defined by constant voltage drop model.
    - $V_D^{(0)} = 0.7V$

4.3.7. **Small-Signal Model**

Neither of these circuits employ the exponential model – simplifying the "solving" process.

- **Q:** How is the small-signal diode model defined?
  - **A:** The total instantaneous circuit is divided into steady-state and time varying components, which may be analyzed separately and solved via algebra.
    - In steady-state, diode represented as CVDM.
    - In time-varying, diode represented as resistor.

CVDM

Total Instantaneous Solution (v_D) = Steady-State Solution (V_D) + Time-Varying Solution (v_d)

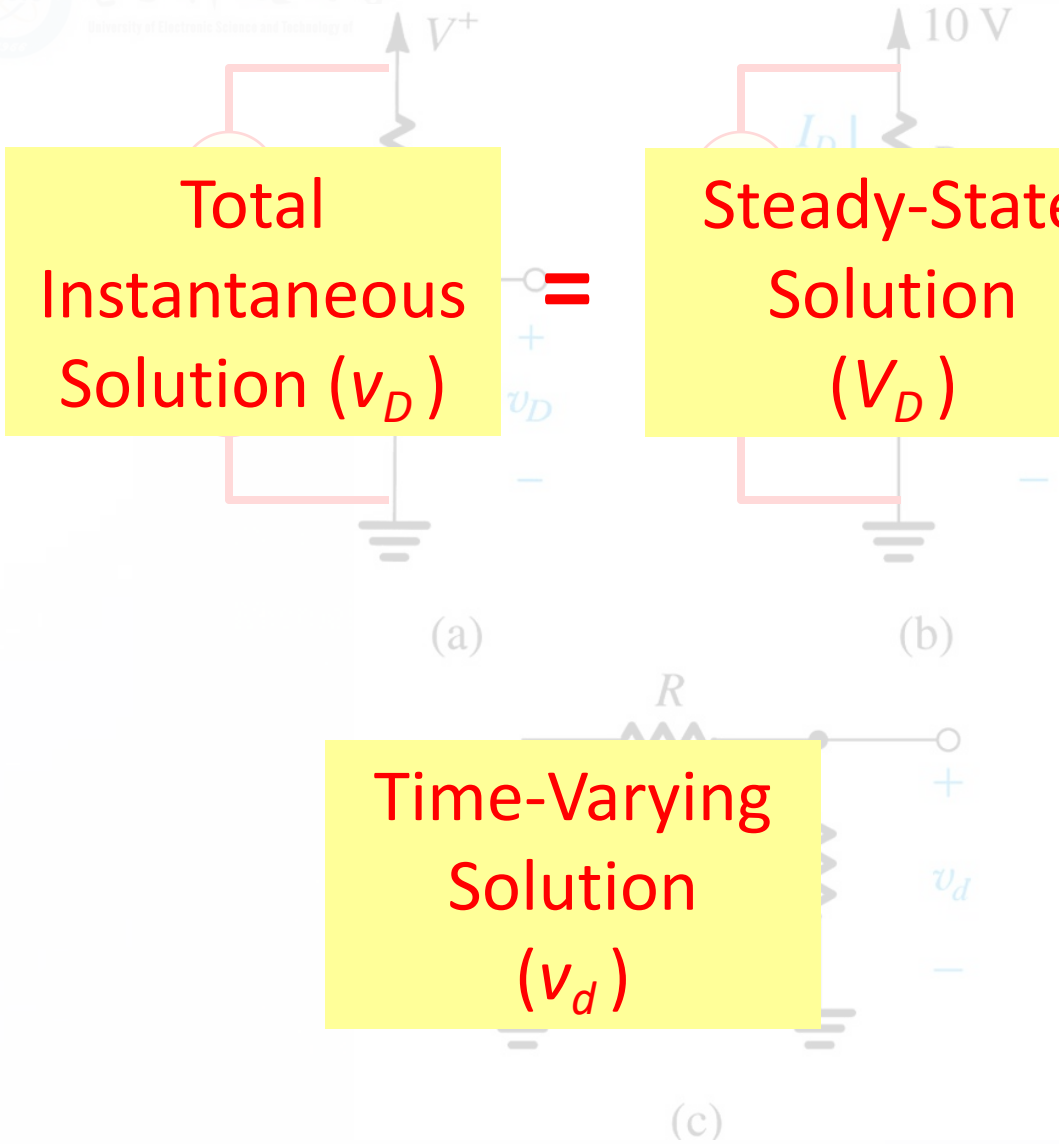

Figure 4.14: (a) Circuit for Example 4.5. **(b)** Circuit for calculating the dc operating point. **(c)** Small-signal equivalent circuit.

4.3.7. **Small-Signal Model**

- **Q:** How is the small-signal diode model defined?
  - **step #1:** Consider the conceptual circuit of Figure 4.13(a).
    - DC voltage (V_D) is applied to diode
    - Upon V_D, arbitrary time-varying signal v_d is super-imposed

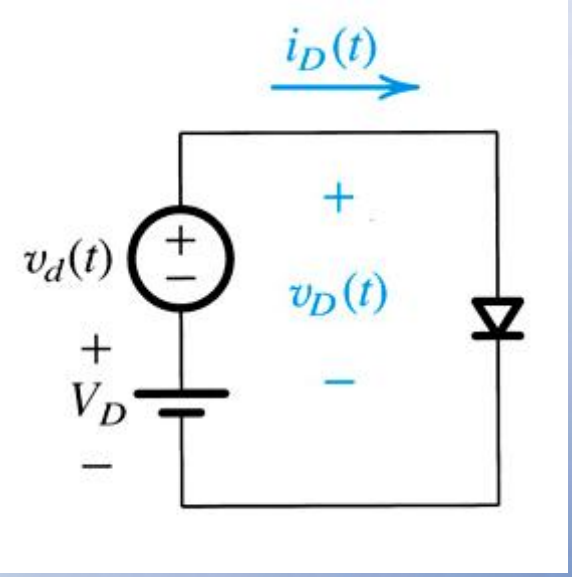

4.3.7. **Small-Signal Model**

- **DC only** – upper-case w/ upper-case subscript
- **time-varying only** – lower-case w/ lower-case subscript
- **total instantaneous** – lower-case w/ upper-case subscript
  - DC + time-varying

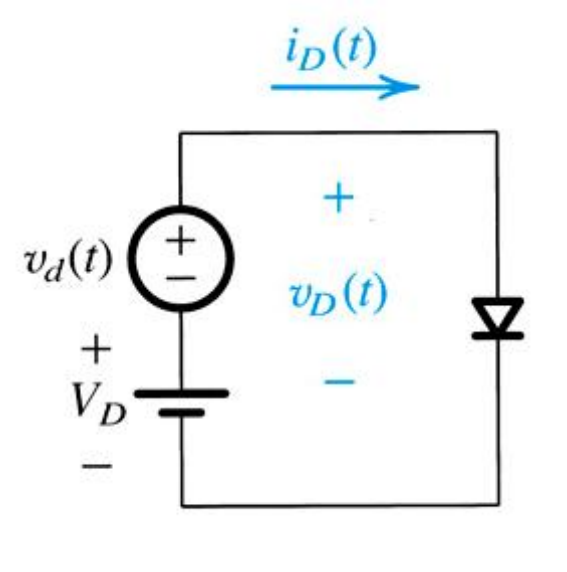

4.3.7. **Small-Signal Model**

- **step #2:** Define DC current as in (4.8).
- **step #3:** Define total instantaneous voltage (v_D) as composed of V_D and v_d.
- **step #4:** Define total instantaneous current (i_D) as function of v_D.

(eq4.8) $I_D = I_S e^{V_D/V_T}$

(eq4.9) $\underbrace{v_D(t) = V_D + v_d(t)}$

$v_D(t)$= total instantaneous voltage across diode

V_D = dc component of $v_D(t)$

$v_d(t)$= time varying component of $v_D(t)$

(eq4.10) $\underbrace{i_D(t) = I_S e^{v_D/V_T}}$

note that this is different from (4.8)

4.3.7. **Small-Signal Model**

- **step #5:** Redefine (4.10) as function of both V_D and v_d.
- **step #6:** Split this exponential in two.
- **step #7:** Redefine total instant current in terms of DC component (I_D) and time-varying voltage (v_d).

(eq4.11) $i_D(t) = I_S e^{(V_D + v_d)/V_T}$

(eq4.11)

action: split this exponential using appropriate laws

$$i_D(t) = \underbrace{I_S e^{V_D/V_T}}_{I_D} e^{v_d/V_T}$$

(eq4.12) $i_D(t) = I_D e^{v_d/V_T}$

4.3.7. **Small-Signal Model**

- **step #8:** Apply power series expansion to (4.12).
- **step #9:** Because $v_d/V_T << 1$, certain terms may be neglected.

example: $e^x = 1 + x + \frac{x^2}{2!} + \frac{x^3}{3!} + \frac{x^4}{4!} + \ldots$

(eq4.12a) $$\overbrace{i_D(t) = I_D\left(1 + \frac{v_d}{V_T} + \overbrace{\left[\left(\frac{v_d}{V_T}\right)^2 \frac{1}{2!}\right] + \left[\left(\frac{v_d}{V_T}\right)^3 \frac{1}{3!}\right] + \ldots}^{\text{because } v_d/V_T << 1\text{, these terms are assumed to be negligible}}\right)}^{\text{action: apply power series expansion to (4.12)}}$$

action: eliminate negligible terms

power series expansion of e^{v_d/V_T}

(eq4.14) $$i_D(t) = I_D\left(1 + \frac{v_d}{V_T}\right)$$

4.3.7. **Small-Signal Model**

$$i_D(t) = I_D + \underbrace{\left(\frac{I_D}{V_T}\right) v_d}_{i_d}$$

- **small signal approximation**
  - Shown to right for exponential diode model.
    - total instant current (i_D)
    - small-signal current (i_d)
    - small-signal resistance (r_d)
  - Valid for $v_d < 5mV$ amplitude (not peak to peak).

$$i_D(t) = I_D + i_d$$

$$i_d = \frac{1}{r_d} v_d$$

$$r_d = \frac{V_T}{I_D}$$

4.3.7: **Small-Signal Model**

- **Q:** How is **small-signal resistance** r_d defined?
  - **A:** From steady-state current (I_D) and thermal voltage (V_T) as below.
    - Note this approximation is only valid for small-signal voltages $v_d < 5mV$.

$$r_d = \frac{V_T}{I_D}$$

Example 4.5: Small-Signal Model

- Consider the circuit shown in Figure 4.14(a) for the case in which R = 10*kOhm*.
- The power supply V+ has a dc value of 10*V* over which is super-imposed a 60*Hz* sinusoid of 1*V* peak amplitude (known as the **supply ripple**)
- Assume diode to have 0.7*V* drop at 1*mA* current.
  - **Q:** Calculate the amplitude of the sine-wave signal appearing across the diode.

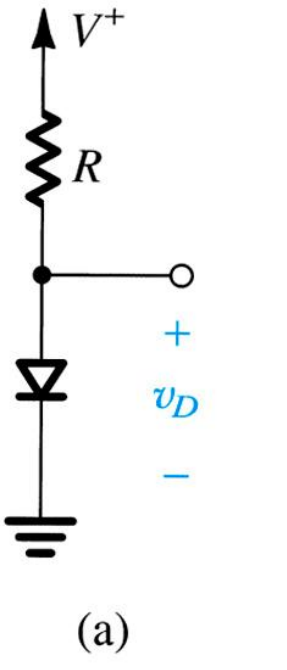

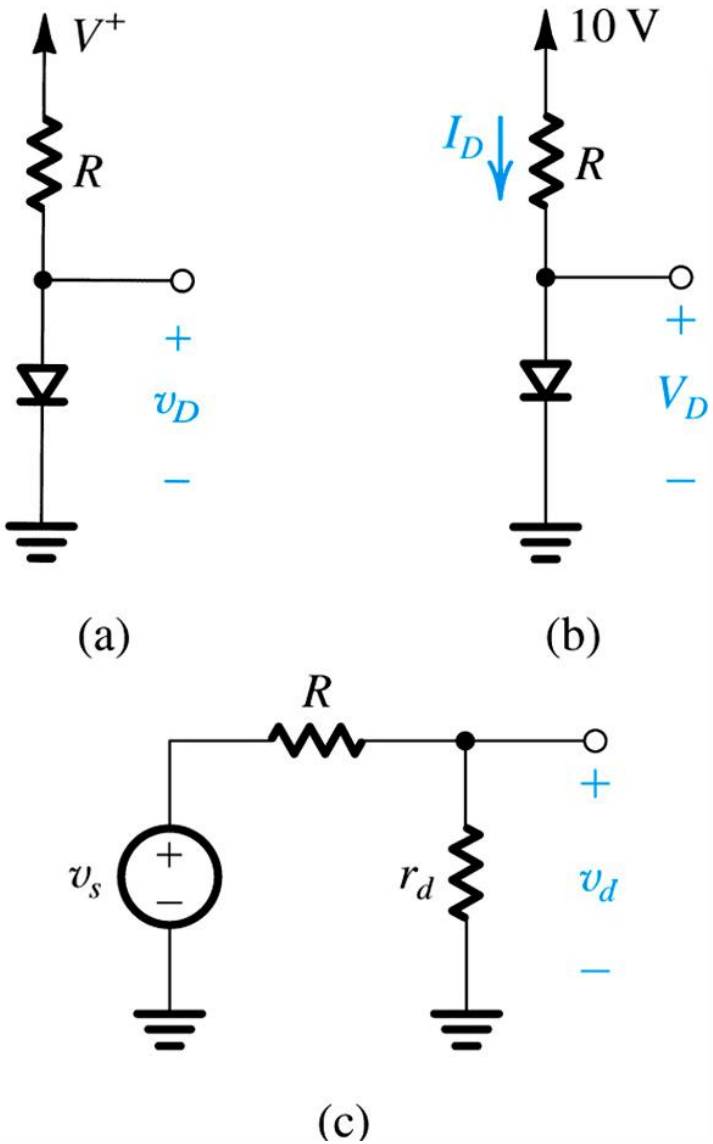

A: v_d (peak) = 2.68mV

Figure 4.14: (a) circuit for Example 4.5. **(b)** circuit for calculating the dc operating point. **(c)** small-signal equivalent circuit.

4.3.8. **Use of Diode Forward Drop in Voltage Regulation**

- **Q:** What is a **voltage regulator**?
  - **A:** Circuit whose voltage output remains stable in spite of changes in supply and load.
- **Q:** What characteristic of the diode facilitates voltage regulation?
  - **A:** The approximately constant voltage drop across it (0.7*V*).

Example 4.6:
Diode-Based Voltage Regulator

- Consider circuit shown in Figure 4.15. A string of three diodes is used to provide a constant voltage of 2.1*V*.
  - **Q:** What is the change in this regulated voltage caused by **(a)** a +/- 10% change in supply voltage and **(b)** connection of 1*kOhm* load resistor.

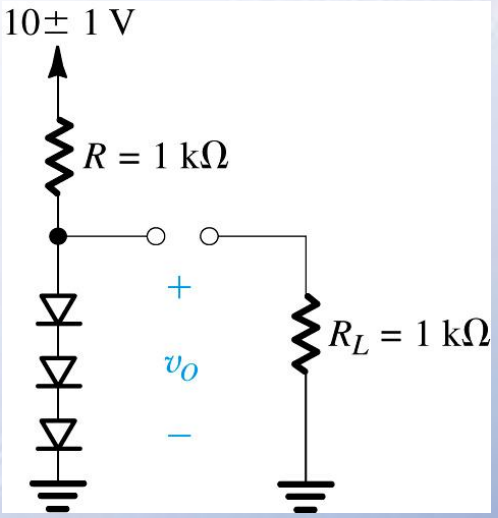

Figure 4.15: Circuit for Example 4.6.

Summary (1)

- In the forward direction, the ideal diode conducts any current forced by the external circuit while displaying a zero-voltage drop. The ideal diode does not conduct in reverse direction; any applied voltage appears as reverse bias across the diode.
- The unidirectional current flow property makes the diode useful in the design of rectifier circuits.
- The forward conduction of practical silicon-junction diodes is accurately characterized by the relationship $i = I_S e^{V/VT}$.

Summary (2)

- A silicon diode conducts a negligible current until the forward voltage is at least 0.5*V*. Then, the current increases rapidly with the voltage drop increasing by 60mV for every decade of current change.
- In the reverse direction, a silicon diode conducts a current on the order of $10^{-9}A$. This current is much greater than I_S and increases with the magnitude of reverse voltage.

Summary (3)

- Beyond a certain value of reverse voltage (that depends on the diode itself), breakdown occurs and current increases rapidly with a small corresponding increase in voltage.
- Diodes designed to operate in the breakdown region are called zener diodes. They are employed in the design of voltage regulators whose function is to provide a constant dc voltage that varies little with variations in power supply voltage and / or load current.

Summary (4)

- In many applications, a conducting diode is modeled as having a constant voltage drop – usually with value of approximately 0.7V.
- A diode biased to operate at a dc current I_D has small signal resistance $r_d = V_T/I_D$.
- Rectifiers covert ac voltage into unipolar voltages. Half-wave rectifiers do this by passing the voltage in half of each cycle and blocking the opposite-polarity voltage in the other half of the cycle.

Homework

4.1 An AA flashlight cell, whose Thévenin equivalent is a voltage source of 1.5 V and a resistance of 1 Ω, is connected to the terminals of an ideal diode. Describe two possible situations that result. What are the diode current and terminal voltage when (a) the connection is between the diode cathode and the positive terminal of the battery and (b) the anode and the positive terminal are connected?

4.2 For the circuits shown in Fig. P4.2 using ideal diodes, find the values of the voltages and currents indicated.

4.3 For the circuits shown in Fig. P4.3 using ideal diodes, find the values of the labeled voltages and currents

Homework

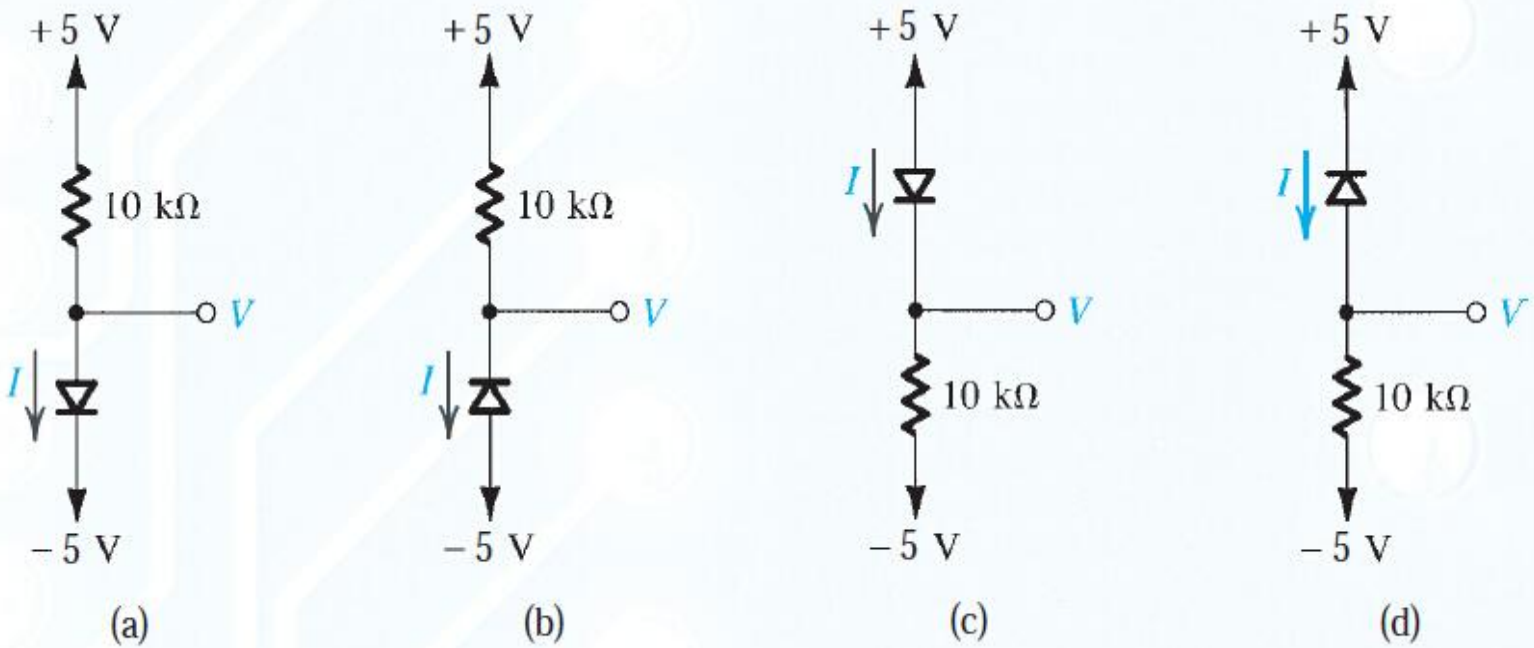

Figure P4.2

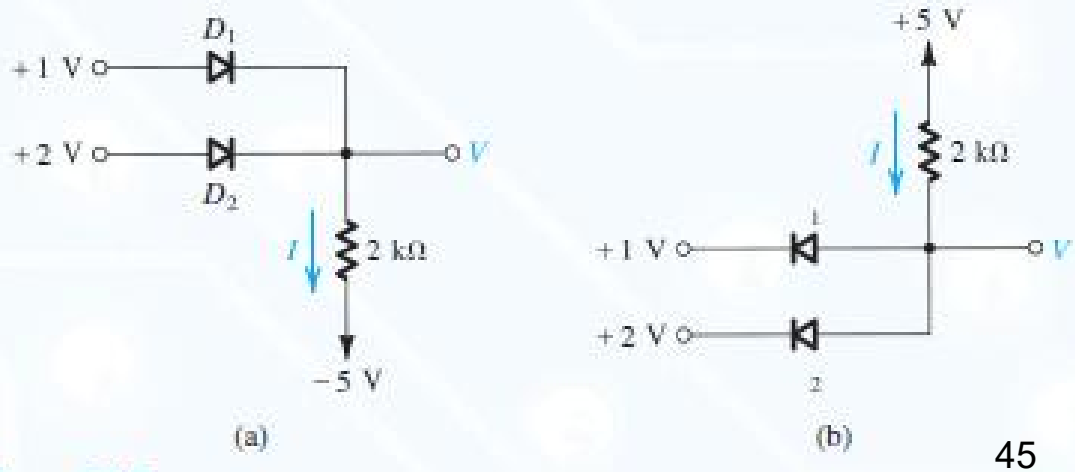

Figure P4.3

Homework

4.10 Assuming that the diodes in the circuits of Fig. P4.10 are ideal, utilize Thévenin's theorem to simplify the circuits and thus find the values of the labeled currents and voltages.

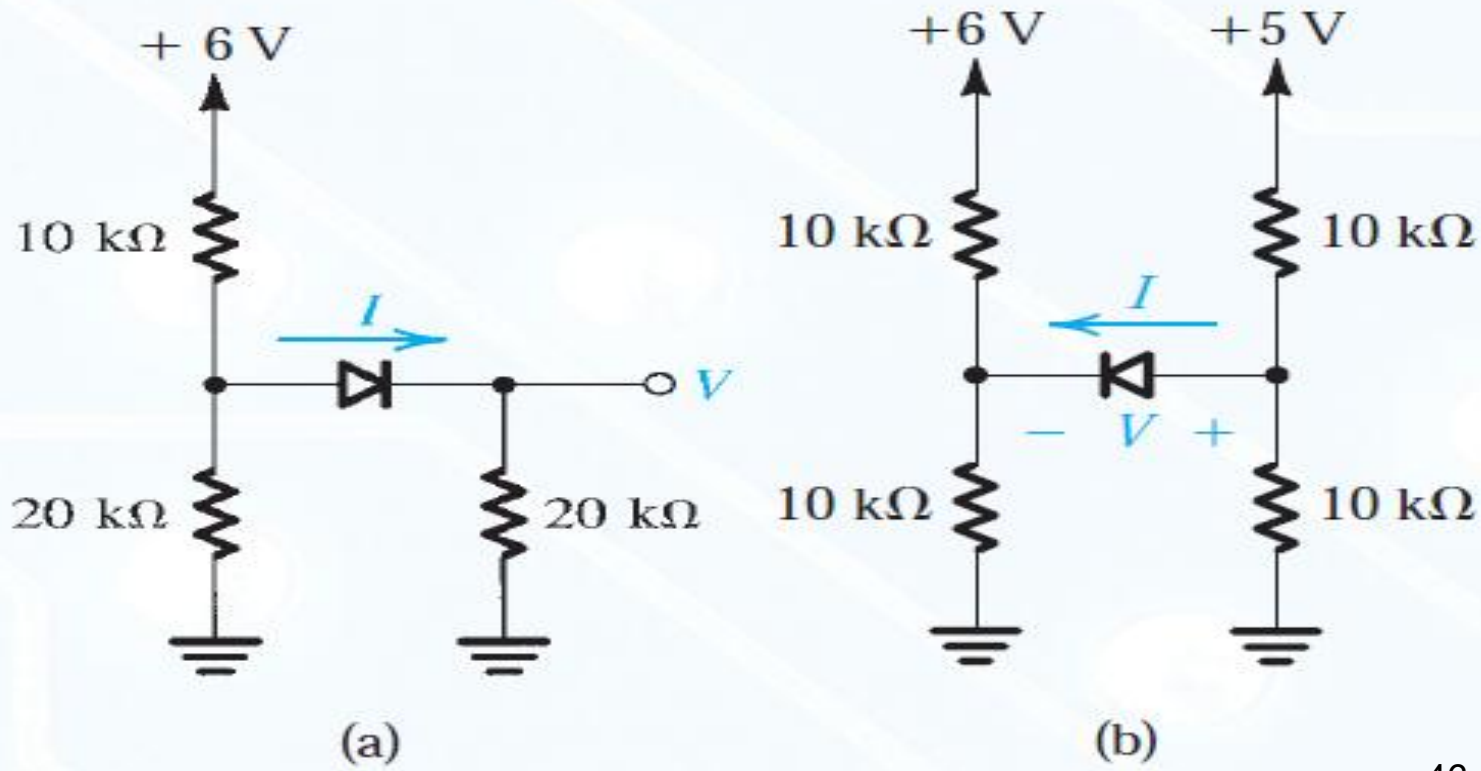

Figure P4.10

Homework

4.13 A symmetrical square wave of 4-V peak-to-peak amplitude and zero average is applied to a circuit resembling that in Fig. 4.3(a) and employing a 100-Ω resistor. What is the peak output voltage that results? What is the average output voltage that results? What is the peak diode current? What is the average diode current? What is the maximum reverse voltage across the diode?

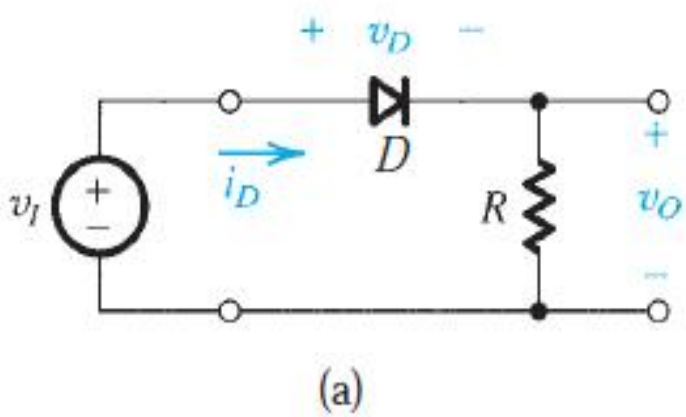

Figure 4.3 (a) Rectifier circuit.

Homework

4.21 The following measurements are taken on particular junction diodes for which V is the terminal voltage and I is the diode current. For each diode, estimate values of I_S and the terminal voltage at 10% of the measured current.

(a) $V = 0.700$ V at $I = 1.00$ A
(b) $V = 0.650$ V at $I = 1.00$ mA
(c) $V = 0.650$ V at $I = 10$ μA
(d) $V = 0.700$ V at $I = 10$ mA

D 4.35 Assuming the availability of diodes for which $v_D = 0.7$ V at $i_D = 1$ mA, design a circuit that utilizes four diodes connected in series, in series with a resistor R connected to a 10-V power supply. The voltage across the string of diodes is to be 3.0 V.

Homework

*4.32 Consider the graphical analysis of the diode circuit of Fig. 4.10 with $V_{DD} = 1$ V, $R = 1$ kΩ, and a diode having $I_S = 10^{-15}$ A. Calculate a small number of points on the diode characteristic in the vicinity of where you expect the load line to intersect it, and use a graphical process to refine your estimate of diode current. What value of diode current and voltage do you find? Analytically, find the voltage corresponding to your estimate of current. By how much does it differ from the graphically estimated value?

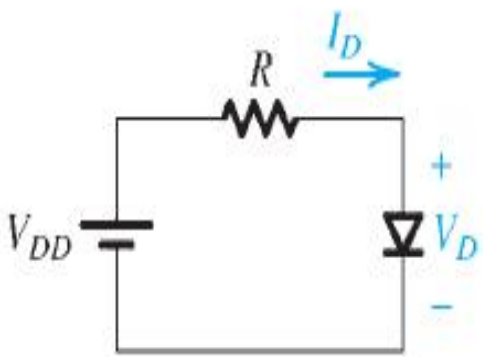

Figure 4.10 A simple circuit used to illustrate the analysis of circuits in which the diode is forward conducting.

Homework

4.46 In the circuit shown in Fig. P4.46, I is a dc current and v_s is a sinusoidal signal. Capacitors C_1 and C_2 are very large; their function is to couple the signal to and from the diode but block the dc current from flowing into the signal source or the load (not shown). Use the diode small-signal model to show that the signal component of the output voltage is

$$v_o = v_s \frac{V_T}{V_T + IR_s}$$

If $v_s = 10$ mV, find v_o for $I = 1$ mA, 0.1 mA, and 1 μA. Let $R_s = 1$ kΩ. At what value of I does v_o become one-half of v_s? Note that this circuit functions as a signal attenuator with the attenuation factor controlled by the value of the dc current I.

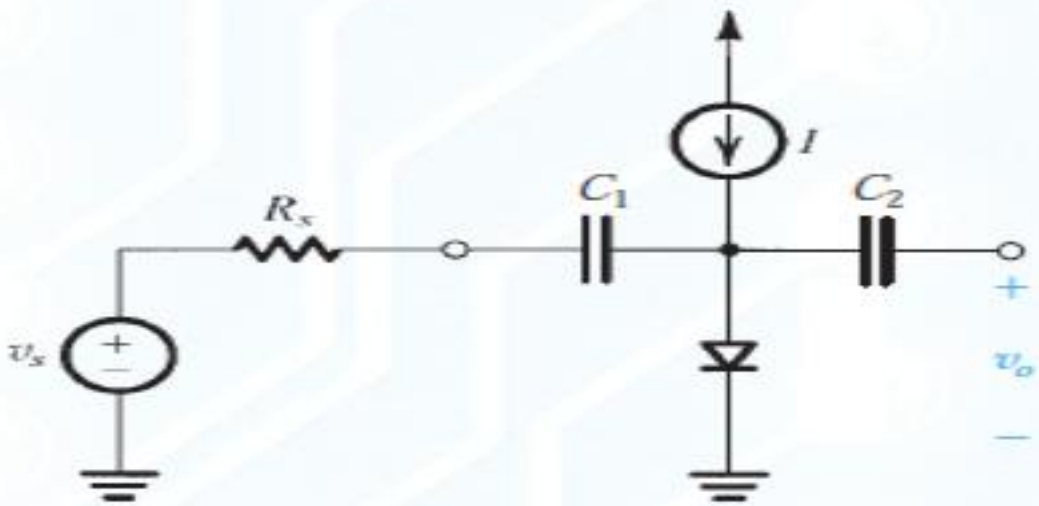

Figure P4.46

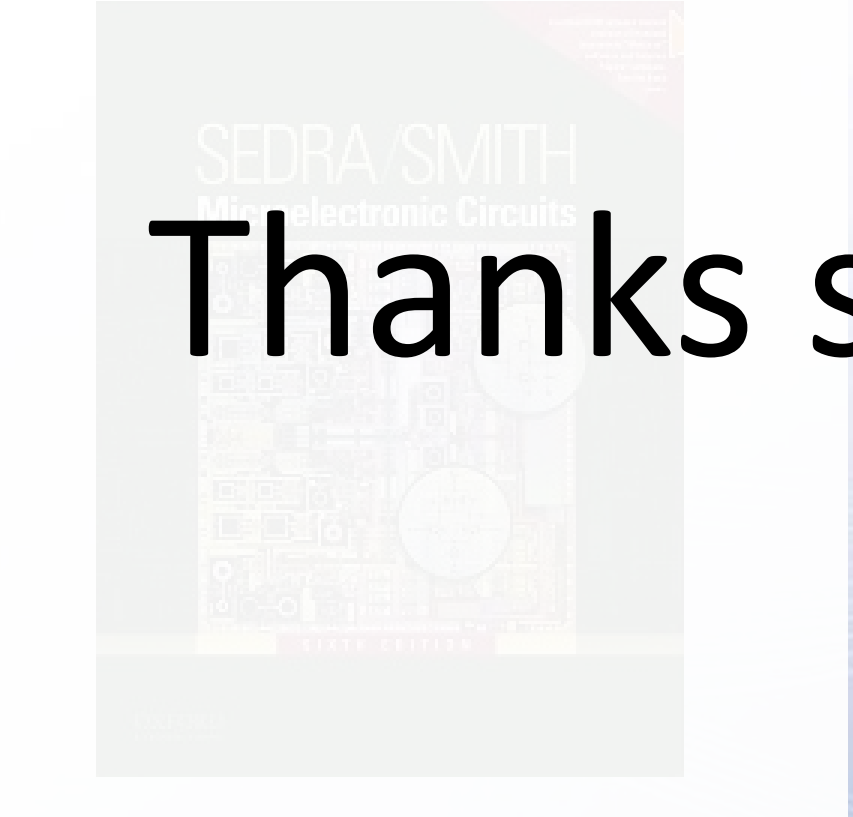

Thanks so much