Amiga KickSmash 32 - In-system smart flash EEPROM

Rev 9 2026-03-11

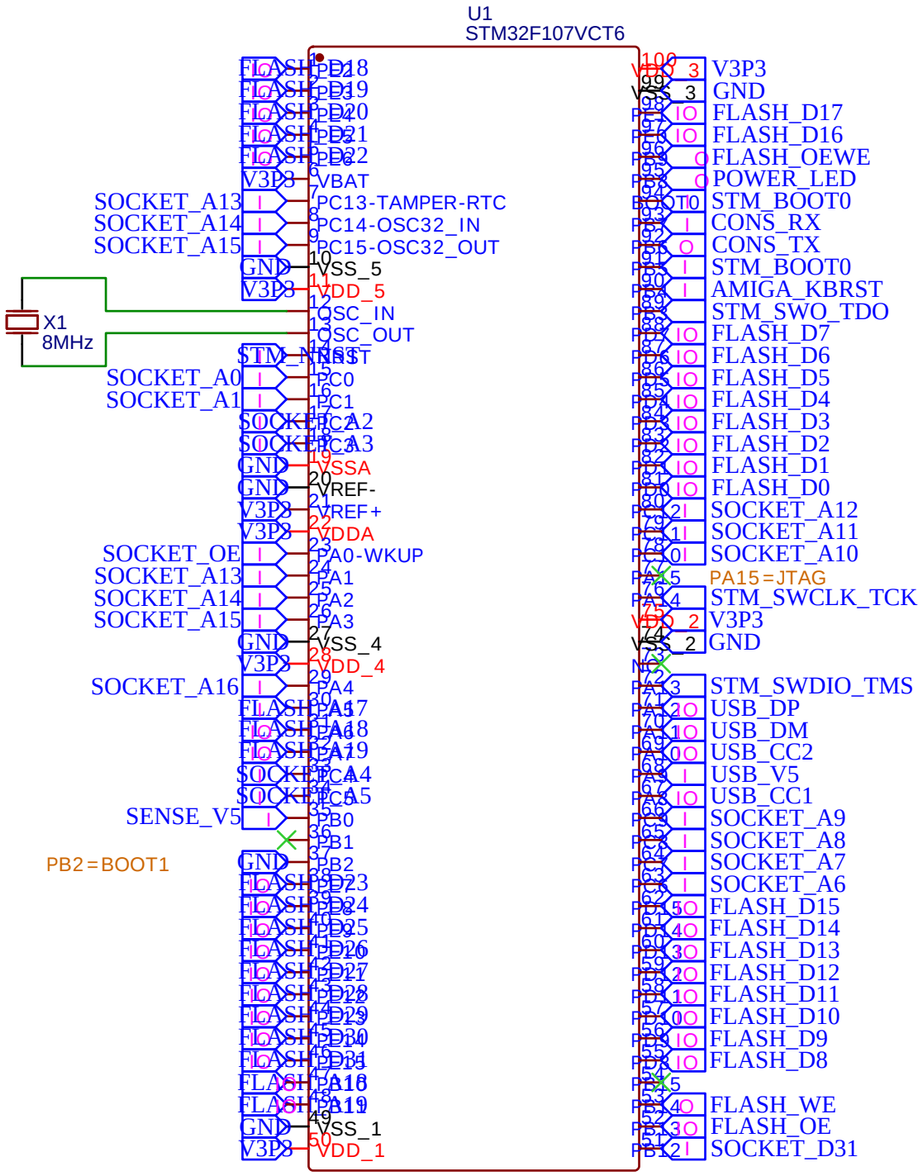

Program and debug

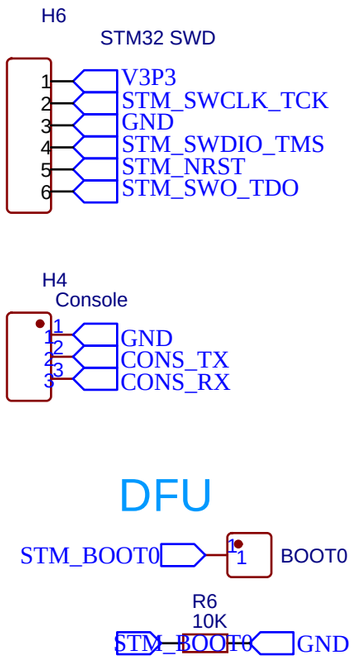

USB Type-C

Raised version Cutout version

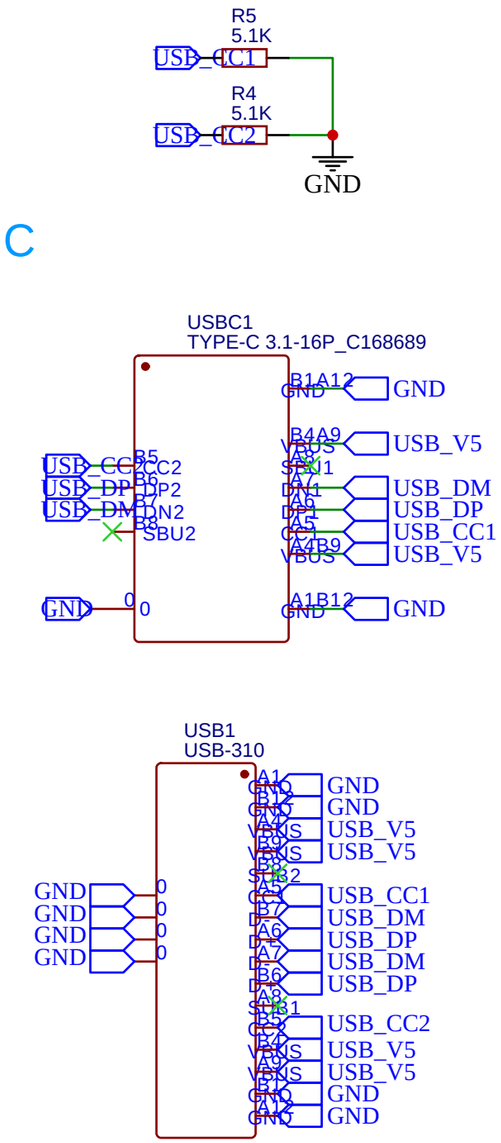

Power

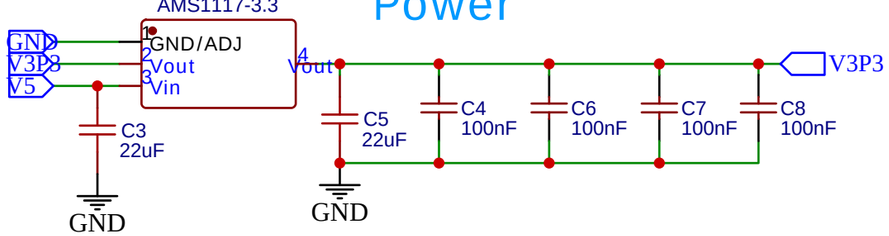

Capture Amiga reset

TITLE: STM32	REV: 9.0
Company: eebugs.com	Sheet: 1/4
Date: 2026-03-11 Drawn By: cdhooper	

EasyEDA

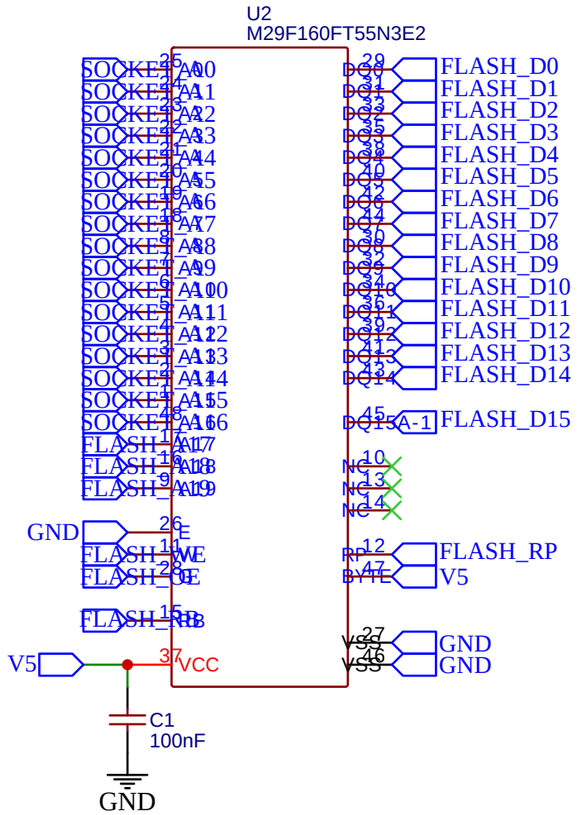

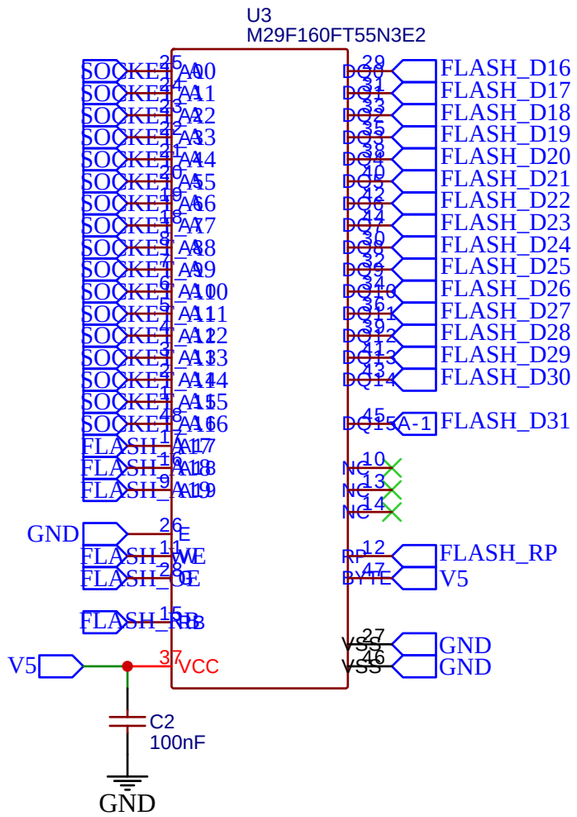

Input Power

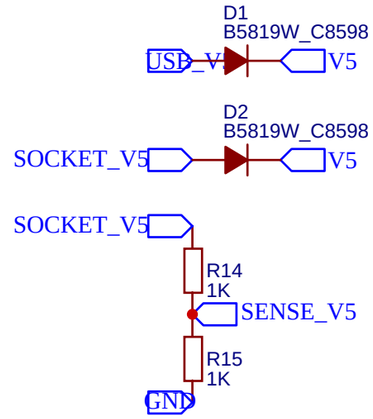

STM32 can override these

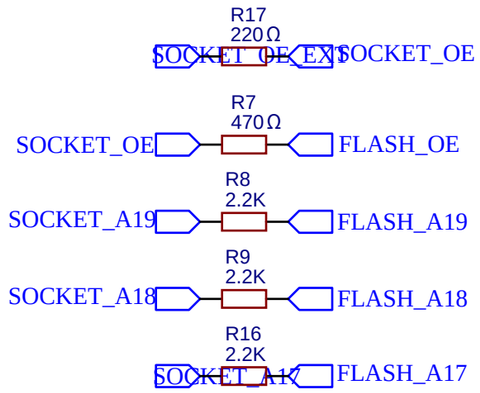

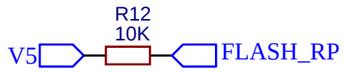

Status LEDs

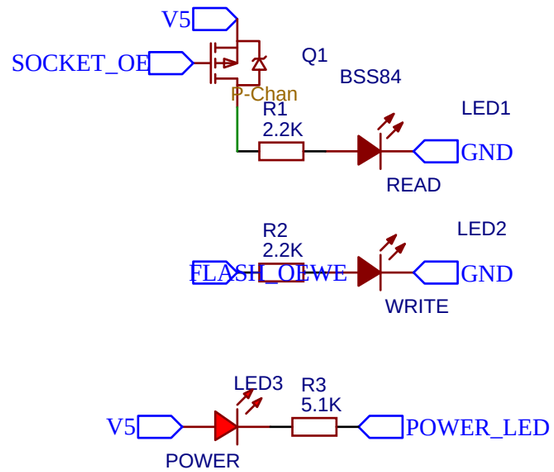

If using Yellow or Green LED here, use 3.3K - 5.1K resistor.

TITLE: Flash + Sockets		REV: 9.0
EasyEDA	Company: eebugs.com	Sheet: 2/4
	Date: 2026-03-11 Drawn By: cdhooper	

A3000/A4000/4KT/AA3K 1200/4KCR

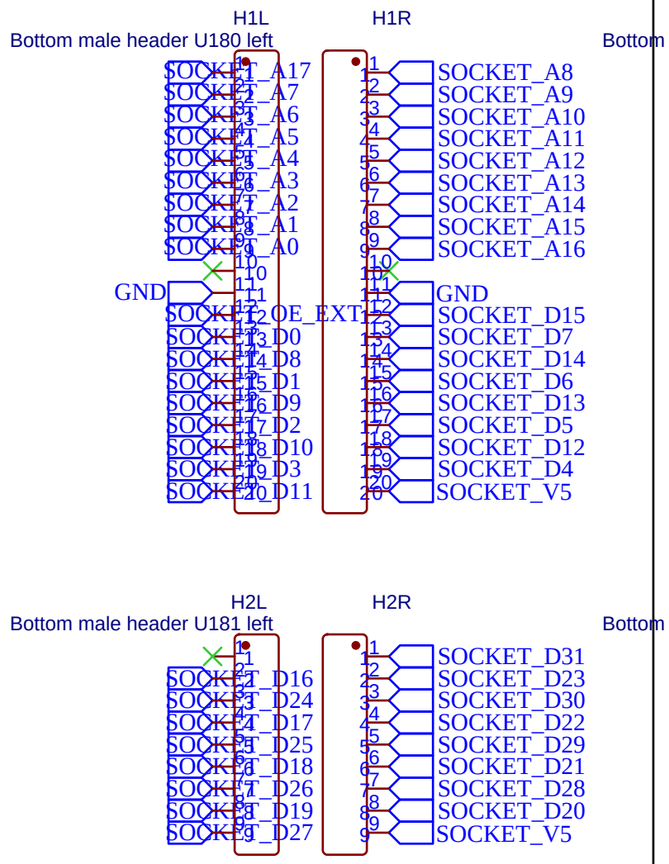

A3000 U182/U183 ROM Tower

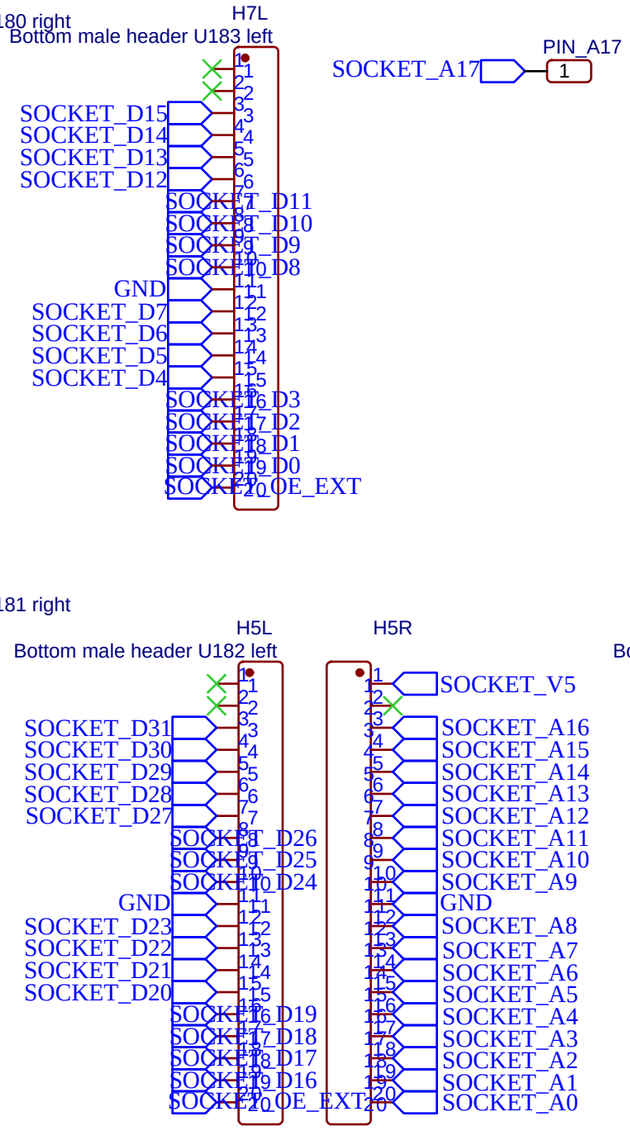

Consolidate with APCI

AmigaPCI AT27C4096

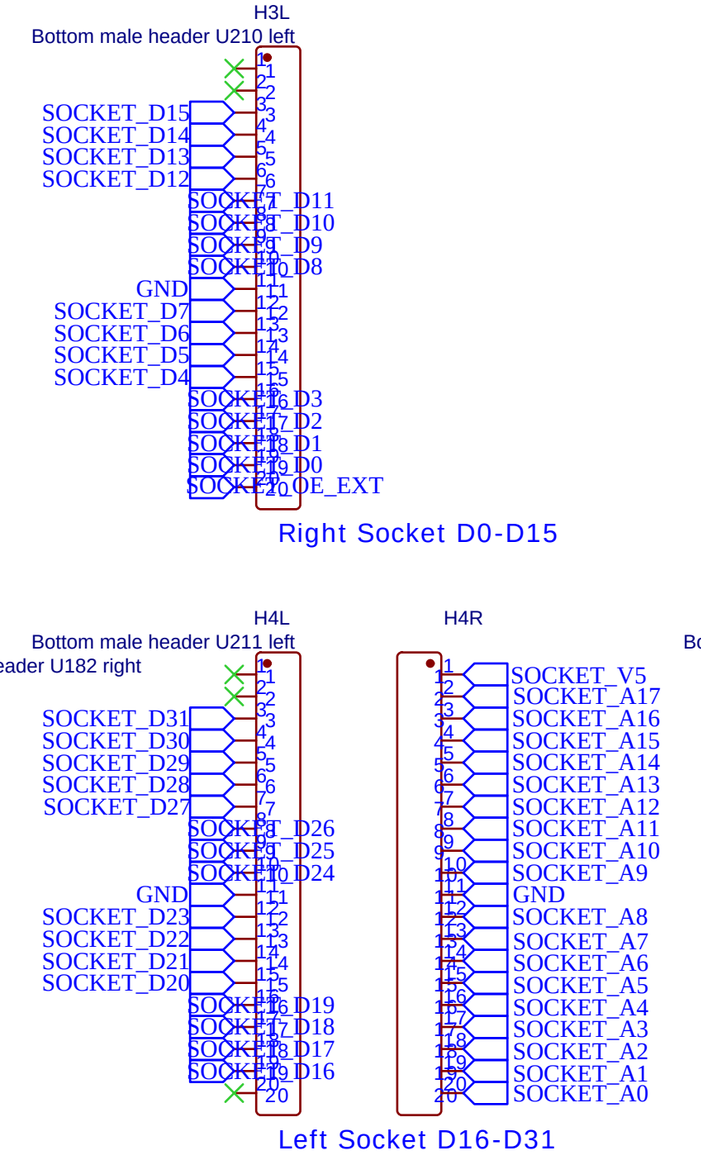

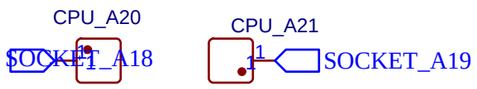

TITLE: Sockets		REV: 9.0
EasyEDA	Company: eebugs.com	Sheet: 3/4
	Date: 2026-03-11 Drawn By: cdhooper	

Bus drivers are used to decouple STM32 putting response and flash write data on the bus from when the Amiga CPU does a read.

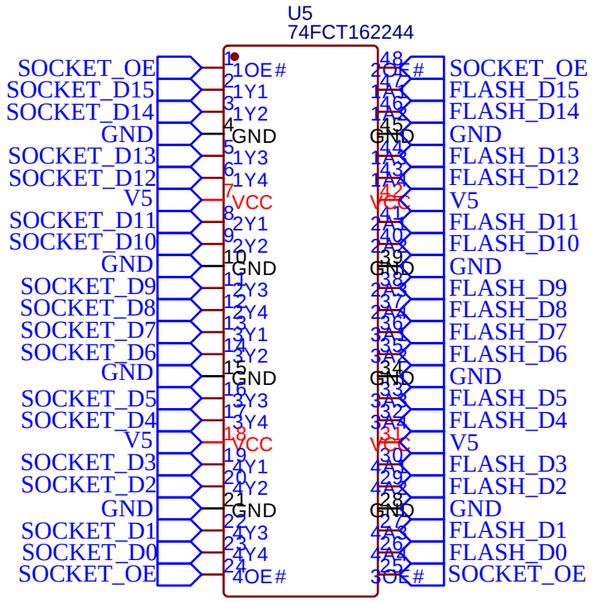

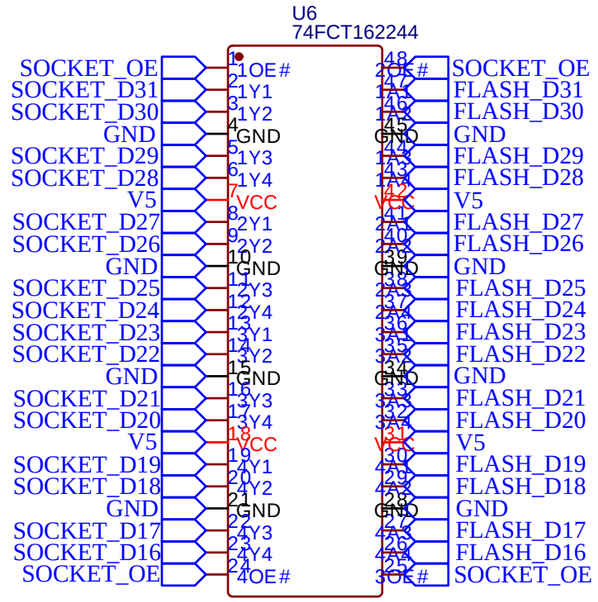

When FLASH_OEWE is high, FLASH_WE will be driven low when SOCKET_OE is low. Otherwise, FLASH_WE is managed by the STM32. This will allow the Amiga CPU to terminate a flash command write at the end of a bus cycle.

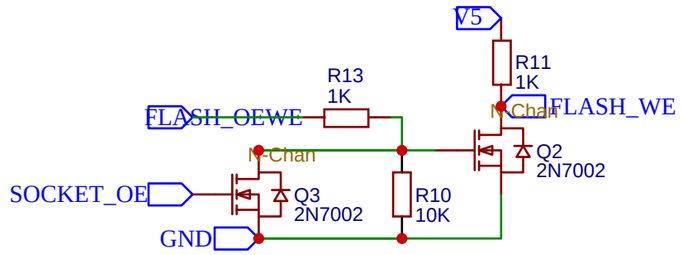

TITLE: Buffer	REV: 9.0
EasyEDA Company: eebugs.com	Sheet: 4/4
Date: 2026-03-11 Drawn By: cdhooper	