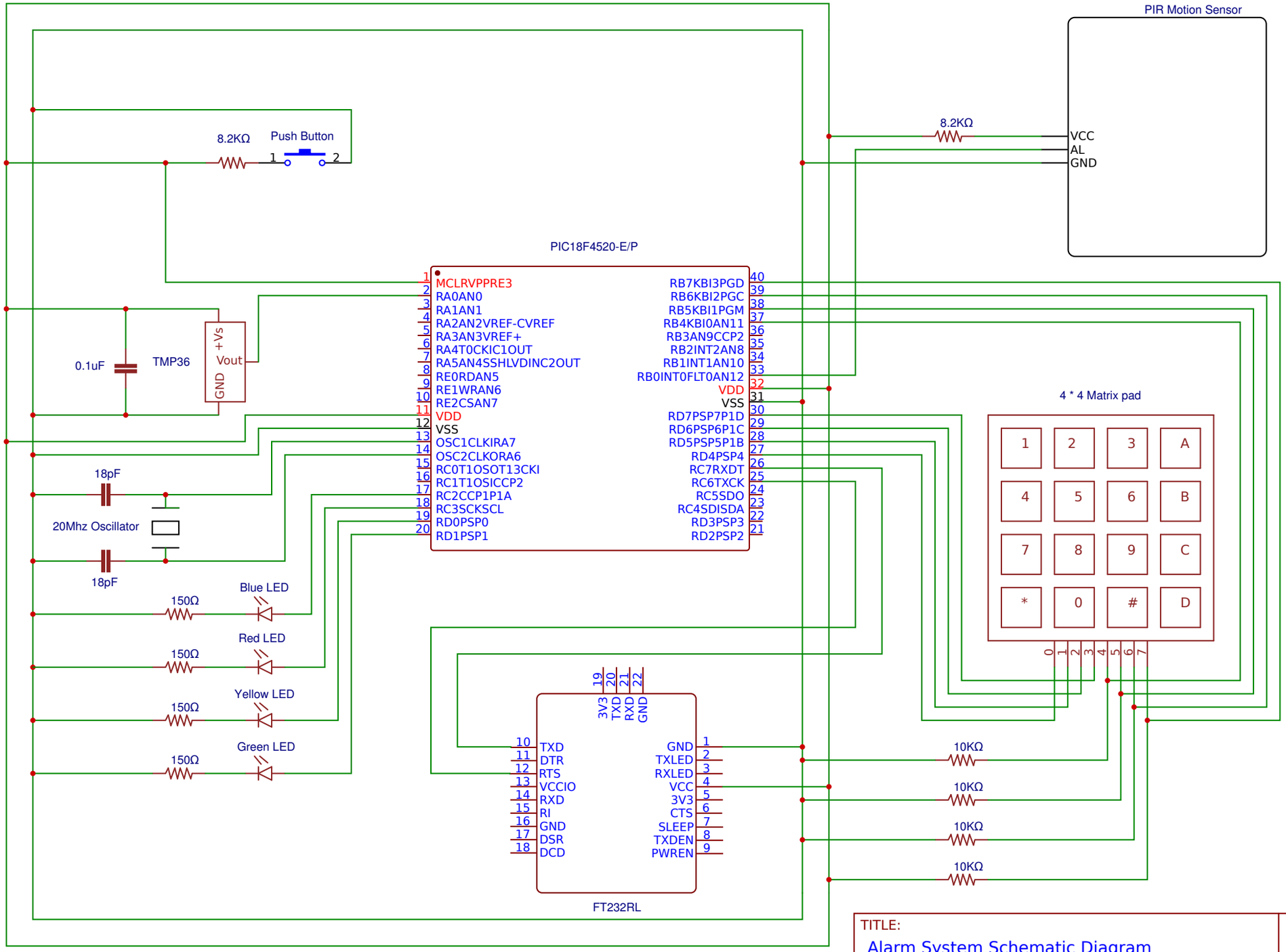

TITLE: Alarm System Schematic Diagram	REV: 1.0
Date: 2017-04-29	Sheet: 1/1
EasyEDA V4.4.4	Drawn By: Don Kuruppu