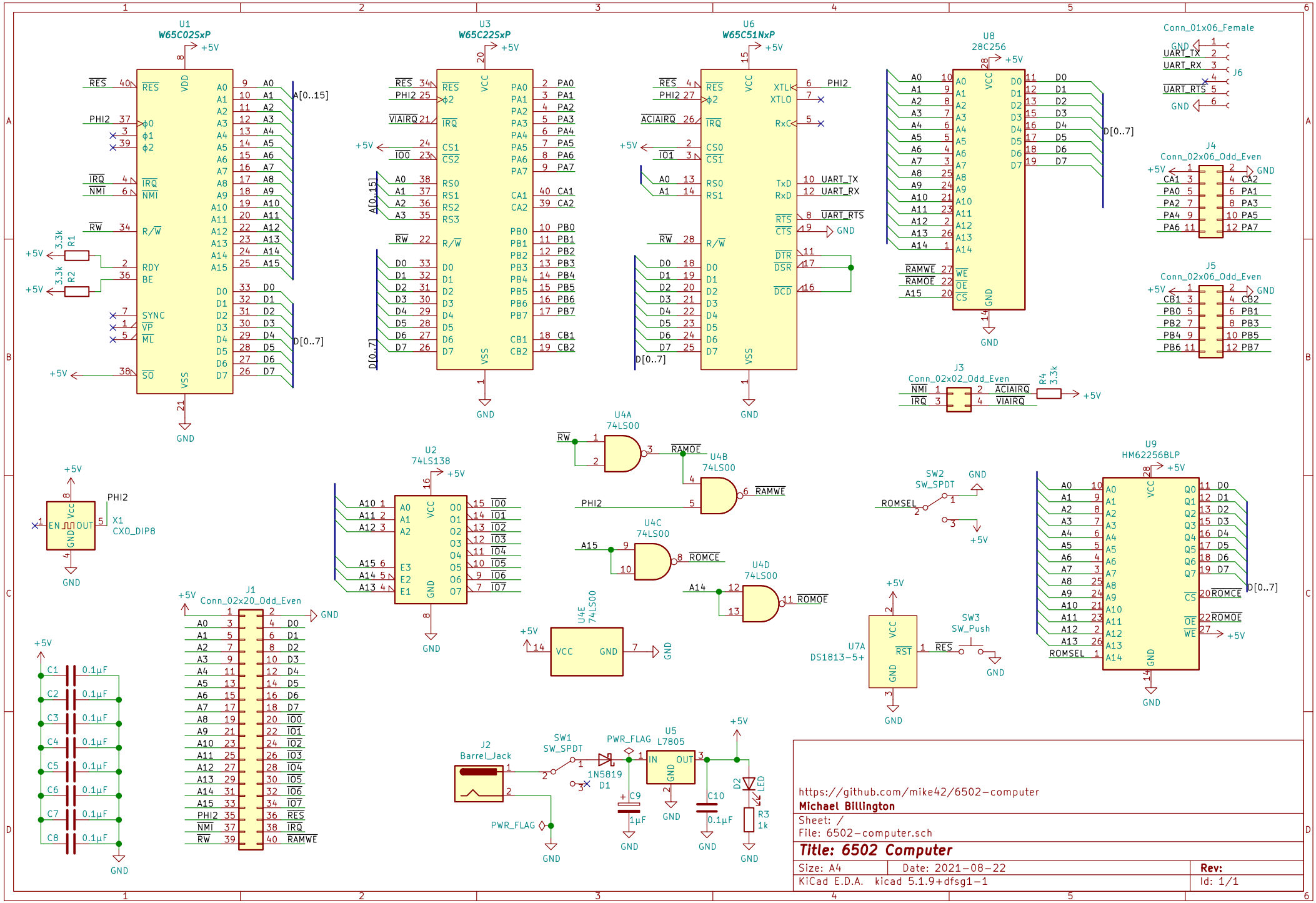
U1
W65C02SxP
U3
W65C22SxP
U6
W65C51NxP
U8
28C256
Conn_01x06_Female
J6
J4
Conn_02x06_Odd_Even
J5
Conn_02x06_Odd_Even
J3
Conn_02x02_Odd_Even
U4A
74LS00
U4B
74LS00
U4C
74LS00
U4D
74LS00
U4E
74LS00
U2
74LS138
U9
HM62256BLP
SW2
SW_SPDT
SW3
SW_Push
U7A
DS1813-5+
X1
CXO_DIP8
J1
Conn_02x20_Odd_Even
J2
Barrel_Jack
SW1
SW_SPDT
PWR_FLAG
U5
L7805
1N5819
D1
C9
1µF
C10
0.1µF
D2
LED
R3
1k
R1
3.3k
R2
3.3k
R4
3.3k
C1
C2
C3
C4
C5
C6
C7
C8
0.1µF
https://github.com/mike42/6502-computer
Michael Billington
Sheet: /
File: 6502-computer.sch
Title: 6502 Computer
Size: A4
Date: 2021-08-22
Rev:
KiCad E.D.A. kicad 5.1.9+dfsg1-1
Id: 1/1