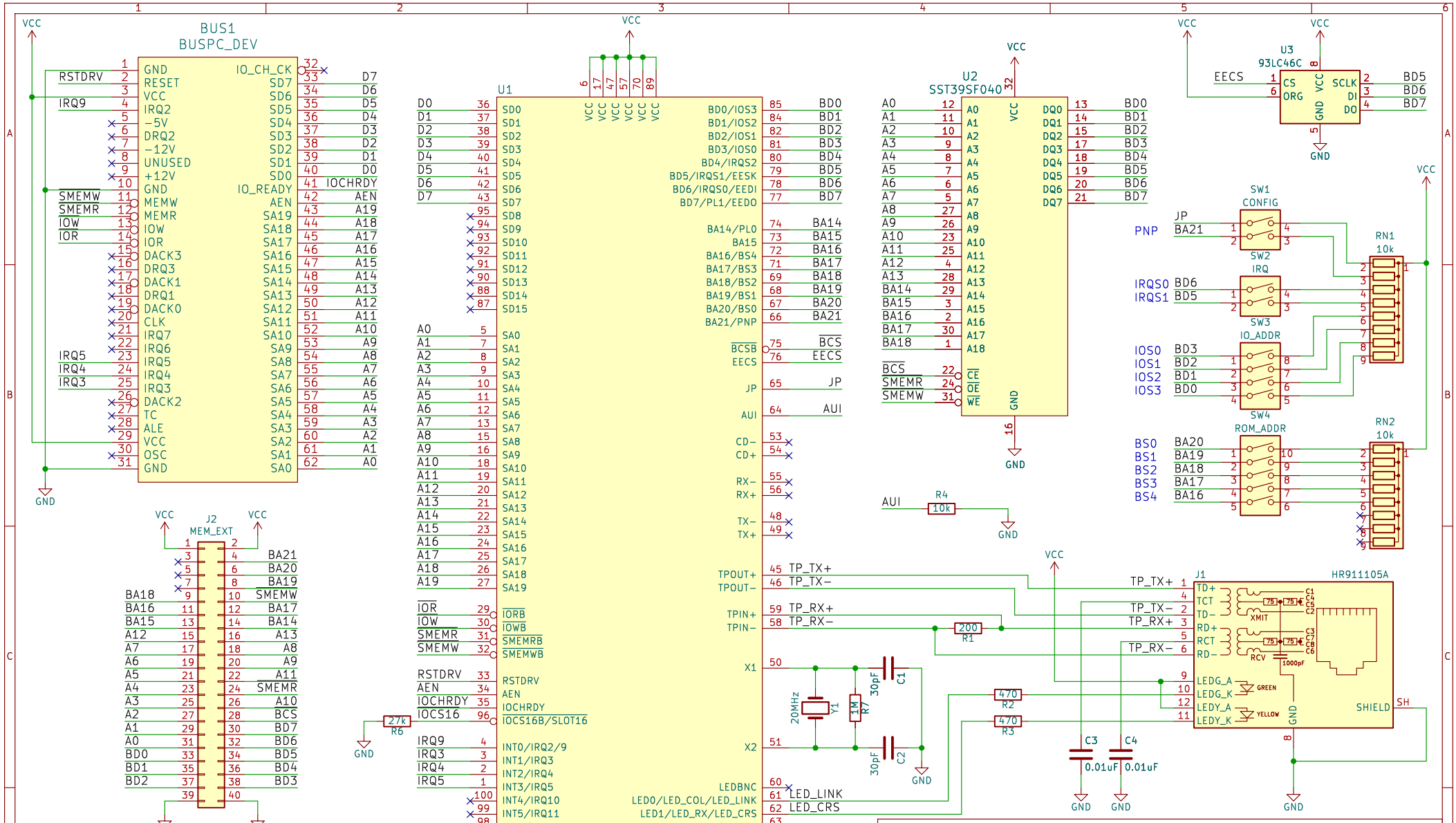
BUS1
BUSPC_DEV
U1
RTL8019AS
U2
SST39SF040
U3
93LC46C
J2
MEM_EXT
J1
HR911105A
SW1
CONFIG
SW2
IRQ
SW3
IO_ADDR
SW4
ROM_ADDR
RN1
10k
RN2
10k
R1
200
R2
470
R3
470
R4
10k
R6
27k
Y1
20MHz
C1
30pF
C2
30pF
C3
0.01uF
C4
0.01uF
C5
0.1uF
C6
0.1uF
C7
0.1uF
C8
0.1uF
C9
22uF
C10
22uF
HOLE1
M3
HOLE2
M3
VCC
GND
ISA 8-Bit Ethernet Controller is an open source hardware project
Original Documentation and design files: https://github.com/skiselev/isa8_eth
Documentation and design files: https://github.com/cebarobot/isa8_eth
Licensed under CERN-OHL-S: https://cern-ohl.web.cern.ch
Designed by Sergey Kiselev, Modified by Ceba
Sheet: /
File: ISA8_Ethernet.kicad_sch
Title: ISA 8-Bit Ethernet Controller (THT)
Size: A4
Date: 2023-05-15
Rev: 1.1
KiCad E.D.A. kicad (7.0.0)
Id: 1/1