Pattern Recognition 156 (2024) 110842

Contents lists available at ScienceDirect

Pattern Recognition

journal homepage: www.elsevier.com/locate/pr

Deep multi-sphere support vector data description based on disentangled representation learning

Hong-Jie Xing [a,b,*], Hui-Nan Wu [c], Ping-Ping Zhang [d]

[a] School of Cyber Security and Computer, Hebei University, Baoding 071000, China
[b] Hebei Key Laboratory of Machine Learning and Computational Intelligence, School of Mathematics and Information Science, Hebei University, Baoding 071002, China
[c] Hebei Meteorological Information Center, Hebei Meteorological Bureau, Shijiazhuang 050021, China
[d] College of Computer Science and Software Engineering, Shenzhen University, Shenzhen 518060, China

ARTICLE INFO

Keywords:
Deep support vector data description
Disentangled representation learning
Variational autoencoder
Hypersphere collapse
Anomaly detection

ABSTRACT

Deep support vector data description (Deep SVDD) combines deep mapping network and support vector data description (SVDD) to jointly optimize network connection weights and hypersphere volume. However, when the parameters of deep mapping network are set improperly, Deep SVDD may face the problem of hypersphere collapse, where all input data are mapped as the hypersphere center. To overcome the hypersphere collapse problem of Deep SVDD and improve the feature learning ability of deep mapping network, deep multi-sphere SVDD based on disentangled representation learning (DMSVDD-DRL) is proposed. DMSVDD-DRL consists of a variational autoencoder (VAE) and multiple hyperspheres. The feature representations obtained by VAE are disentangled into discriminative representations and generative representations that obey mixture t-distribution and Gaussian distribution, respectively. In the pre-training phase of DMSVDD-DRL, the network parameters and the hypersphere centers are initialized. In the training phase, the augmented data are added into the training set. The discriminative representations of both the input and augmented data are generated through the mapping network. Furthermore, multiple hyperspheres are constructed by the obtained discriminative representations in the feature space. Finally, the VAE loss of the input data, the reconstruction error of the augmented data, the augmentation loss between the input and augmented data, the average radius of the multiple hyperspheres, and the average distance from discriminative representations to their corresponding hypersphere centers are jointly minimized to obtain the optimal network connection weights and the multiple minimum volume hyperspheres. The effectiveness of the proposed DMSVDD-DRL is validated through the comparative and ablation experiments on the benchmark data sets. In addition, it is verified that DMSVDD-DRL is more robust against outliers in comparison with its related methods.

1. Introduction

Anomaly detection is regarded as a fundamental task of machine learning. An anomaly detector is constructed by learning the given normal data and utilized to detect the anomalous data that deviate from the normal data. Recently, Ruff et al. [1] divided the existing anomaly detection methods into shallow and deep anomaly detection approaches. Among shallow anomaly detection methods, kernel classifiers, e.g., one-class support vector machine (OCSVM) and support vector data description (SVDD), are commonly used. These methods utilize kernel functions to implicitly map data from the input space into the high-dimensional feature space. However, the storage and calculation of kernel matrix need high space and time complexities, which makes these methods not suitable for tackling large-scale data sets. In contrast, deep anomaly detection approaches can automatically learn feature representations contained in the given data. They are more suitable for tackling large-scale data sets.

Among deep anomaly detection methods, the autoencoder based anomaly detection approaches have obtained extensive attentions. Erfani et al. [2] proposed the anomaly detection method based on autoencoder and OCSVM. The feature representations obtained by autoencoder are used as the input vectors of OCSVM to further implement anomaly detection. Some improved variants of autoencoder, such as denoising autoencoder, sparse autoencoder and variational autoencoder [3], are also utilized as mapping networks in anomaly detection to obtain the feature information of the given data. However, the learning objectives of these anomaly detection methods based on autoencoder and its variants are all minimizing reconstruction error.

* Corresponding author at: School of Cyber Security and Computer, Hebei University, Baoding 071000, China.
E-mail address: hjxing@hbu.edu.cn (H.-J. Xing).

https://doi.org/10.1016/j.patcog.2024.110842
Received 8 September 2023; Received in revised form 24 July 2024; Accepted 25 July 2024
Available online 27 July 2024
0031-3203/© 2024 Elsevier Ltd. All rights are reserved, including those for text and data mining, AI training, and similar technologies.

They have not considered the impact of the discriminative information of downstream one-class classifiers on connection weights in their mapping networks. To solve this problem, Ruff et al. [4] proposed deep support vector data description (Deep SVDD). Its optimal network connection weights and smallest hypersphere can be achieved by simultaneously optimizing the objective functions of both the mapping network and SVDD.

However, Deep SVDD only considers minimizing the hypersphere volume and dose not consider whether the obtained feature representations preserve the information of data structure. Moreover, Deep SVDD suffers from the hypersphere collapse problem, that is, its mapping network maps all the input data to the hypersphere center. To avoid the hypersphere collapse problem, it is necessary to impose constraints on the network connection weights, network bias and activation function, which may limit the feature learning ability of the mapping network and influence the stability and detection performance of Deep SVDD. Recently, Zhang and Deng [5] proposed deep structure preservation SVDD (DSPSVDD), which introduces the reconstruction error term into the loss function of Deep SVDD to efficiently utilize the structural information of data and improve the stability of training outcomes. To alleviate the hypersphere collapse problem of Deep SVDD, Ghafoori and Leckie [6] proposed deep multi-sphere SVDD (DMSVDD), which maps the normal data into multiple hyperspheres in the feature space and optimizes the average volume of multiple hyperspheres together with the distance from the obtained feature representations to their corresponding hypersphere centers. Zhou et al. [7] proposed Deep SVDD based on variational autoencoder (Deep SVDD-VAE). Deep SVDD-VAE utilizes variational autoencoder (VAE) as the mapping network to obtain the feature representations of the given data. The spherical discriminative boundary can be further determined by the obtained feature representations. Moreover, without adding additional constraints, Deep SVDD-VAE can efficiently solve the hypersphere collapse problem of Deep SVDD. Xing and Zhang [8] proposed contrastive deep support vector data description (CDSVDD). CDSVDD obtains the discriminative features in a self-supervised learning manner. It can efficiently solve the hypersphere collapse problem of Deep SVDD. Hojjati and Armanfard [9] proposed deep autoencoding support vector data descriptor (DASVDD) that simultaneously learns the parameters of autoencoder and minimizes the volume of an enclosing hypersphere on its latent representation. To deal with multi-view data, Chen et al. [10] proposed an end-to-end deep learning method, i.e., deep multi-view support vector data description (DMVSVDD). They jointly trained multiple deep autoencoding neural networks of multiple views while adaptively optimizing the data-enclosing hypersphere of each view in latent space.

For the convenience of calculation, VAE usually assumes that the prior of feature representations obeys the single Gaussian distribution, which may easily lead to the posterior collapse problem, that is, the KL divergence is zero and the encoder outputs constant vectors. As the result, the valuable feature representations cannot be obtained. Moreover, using only the single Gaussian distribution cannot fit complex data distributions. To address these issues, more reasonable assumptions about the prior distribution need to be considered. Jiang et al. [11] proposed variational deep embedding for unsupervised generative clustering. They utilized a mixture Gaussian distribution to substitute the Gaussian distribution in the prior hypothesis of VAE and used stochastic gradient variational Bayes estimator together with the re-parameterization trick to optimize the evidence lower bound (ELBO). Based on the idea of Gaussian mixture model (GMM), Zong et al. [12] proposed deep autoencoding GMM, which utilizes deep autoencoder to obtain the feature representations of the input data together with the reconstruction error between the input and reconstructed data. The obtained feature representations together with the reconstruction error are concatenated and input into the GMM. The network parameters are optimized in an end-to-end fashion. Although using the prior assumption of mixture Gaussian distribution can improve the feature learning ability of VAE, the performance of corresponding models may be affected when there are outliers in the training data. To improve the robustness of models against outliers, some studies consider using the Student's-t mixture model (SMM) to fit the given data. Benefitting from the heavy-tail characteristic of Student-t distribution, SMM is more robust against outliers than GMM [13]. Based on VAE and mixture t-distribution, Zhang et al. [14] proposed a generative robust image categorization method. The proposed method uses mixture t-distribution as the prior assumption of VAE and optimizes the lower bound of evidence through variational reasoning. Yang et al. [15] proposed a clustering method based on both Wasserstein generative adversarial network with gradient penalty and VAE with the Gaussian mixture prior. They further developed a variant of their proposed model based on mixture t-distribution. Compared with mixture Gaussian distribution, the model utilizing mixture t-distribution as its prior possesses better robustness.

Another disadvantage of VAE is that it usually considers only a single feature space in the feature learning process. The various information obtained from VAE are entangled together to form complex feature representations. However, it is necessary to learn distinguishable feature representations in many tasks. In the classification scenario, data from different categories often share common features, which are unnecessary for classification. The unique features related to class labels should be paid more attention. Hence, disentangling feature representations in the feature space is helpful for feature learning and other machine learning tasks [16]. Li et al. [17] proposed a framework named anomaly detection based on unsupervised disentangled representation learning and manifold learning (AnoDM). AnoDM utilizes β-VAE to learn disentangled feature representations and t-distributed stochastic neighbor embedding (t-SNE) to fulfill manifold learning. Reconstruction error of β-VAE and local density estimation are combined to define anomaly score function. Ding et al. [18] proposed guided variational autoencoder (Guided-VAE). For unsupervised Guided-VAE, feature representations are disentangled into two parts, in which the geometric transformation information and the content information are embedded, respectively. Wang et al. [19] proposed disentangling generative model for clustering. The particular and common features are separated in the feature space and are assumed to obey mixture Gaussian distribution and standard Gaussian distribution, respectively. Moreover, the posterior distributions of the particular and common features are approximated by different networks. Yang et al. [20] proposed the VAE based robust deep generative clustering method that disentangles each feature representation into cluster representation and generative representation. The cluster representations obey mixture Gaussian distribution and preserve cluster information, while the generative representations obey Gaussian distribution and preserve generative information. Mo et al. [21] investigated disentangled representation learning for the multiplex graph. The common and private representations learned by the proposed method can be provably disentangled. Ye and Bors [22] developed a hybrid model named as self-supervised adversarial variational learning (SS-AVL). It is verified that SS-AVL possesses disentangled and interpretable representation learning mechanisms. Gao et al. [23] proposed a cluster-based semantic disentangling representation (CSDR) approach. CSDR constructs the visual-semantic embedding space based on the disentangled fine-grained semantic representations. As the result, the intra-class similarity and inter-class discriminability of semantic representations can be increased. To acquire more discriminative features, Zhang et al. [24] proposed a disentangled representation learning framework that aims at decoupling the two distinctive features within scene text images.

To sufficiently use the feature learning ability of the VAE based mapping network and solve the hypersphere collapse problem of Deep SVDD, deep multi-sphere support vector data description based on disentangled representation learning (DMSVDD-DRL) is proposed. The feature representations obtained by VAE are disentangled into the discriminative representations and the generative representations that obey mixture t-distribution and Gaussian distribution, respectively. In

the pre-training phase of DMSVDD-DRL, the network parameters of VAE and the multiple hypersphere centers are initialized. In the training phase, the augmented data are generated by rotating, translating and enhancing image contrast of the input data. After the first layer of the mapping network, the outputs of the input and augmented data are fused. The fused data are then transmitted back to the network to obtain discriminative representations. Furthermore, multiple hyperspheres are constructed in the feature space. The VAE loss of the input data, the reconstruction error of the augmented data, the augmentation loss between the input and augmented data, the average radius of the multiple hyperspheres, and the average distance between the discriminative representations and their corresponding hypersphere centers are jointly optimized to obtain the optimal network connection weights and the multiple minimum volume hyperspheres. In the testing phase, the distances between the discriminative representations of the test data and their corresponding hypersphere centers are calculated. The differences between the obtained distances and their corresponding hypersphere radii are utilized as the anomaly scores of the test data.

The contributions of this study are as follows.

- DMSVDD-DRL disentangles feature representations into generative representations and discriminative representations that obey Gaussian distribution and mixture t-distribution, respectively. On the one hand, VAE can better capture the distribution of the input data. Therefore, the feature learning ability of the mapping network in DMSVDD-DRL can be effectively enhanced. On the other hand, DMSVDD-DRL only uses discriminative representations to construct anomaly detector. Hence, DMSVDD-DRL is not disturbed by irrelevant information such as generative styles. Moreover, the heavy-tail characteristic of t-distribution can efficiently improve the robustness of DMSVDD-DRL against outliers.
- DMSVDD-DRL introduces augmented data during the training phase. The ability of features containing key information can be enhanced by fusing the outputs of the input and augmented data after the first layer of the mapping network.
- Different from Deep SVDD, DMSVDD-DRL constructs multiple hyperspheres in the feature space and utilizes the nearest neighbor principle together with the alternating optimization process to automatically update the number, position and volume of hyperspheres during the training procedure. Therefore, the hypersphere collapse problem caused by all feature representations being mapped to only one hypersphere center can be efficiently avoided.
- In the training phase, DMSVDD-DRL jointly optimizes the VAE loss of the input data, the reconstruction error of the augmented data, the augmentation loss between the input and augmented data, the average radius of the multiple hyperspheres, and the average distance between the discriminative representations and their corresponding hypersphere centers. Hence, the feature representations and the discriminative information of the multiple hyperspheres are mutually influenced and alternatively updated. The detection performance of DMSVDD-DRL can thus be effectively improved.

The remainder of this paper is structured as follows. Section 2 briefly introduces VAE and DMSVDD. Section 3 describes in detail the proposed DMSVDD-DRL. In Section 4, empirical studies on the benchmark data sets validate the presented model. Finally, Section 5 concludes this paper.

2. Related work

2.1. VAE

Variational autoencoder (VAE) [3] is regarded as a typical generative model. It consists of encoder and decoder. VAE utilizes variational Bayesian inference to learn the probability distribution of the input data and obtains the continuous probability distribution in the latent space, so that its decoder samples according to the obtained distribution to achieve the reconstructed data.

Suppose that we are given n i.i.d. input data $\mathbf{X} = \{\mathbf{x}_i\}_{i=1}^n$, where $\mathbf{x}_i \in \mathcal{R}^D$. Let $\mathbf{z}_i \in \mathcal{R}^{D'} \sim \mathcal{N}(\mathbf{0}, \mathbf{I})$ be the feature representation of $\mathbf{x}_i$, where $\mathbf{0}$ and $\mathbf{I}$ denote D'-dimensional zero vector and D'-dimensional identity matrix, respectively.

To learn the network parameters of VAE, it is necessary to maximize the logarithmic likelihood estimation of the model parameters that is expressed as

$$\log p_\theta(\mathbf{X}) = \log p_\theta(\mathbf{x}_1, \dots, \mathbf{x}_n) = \log \prod_{i=1}^n p_\theta(\mathbf{x}_i) = \sum_{i=1}^n \log p_\theta(\mathbf{x}_i), \tag{1}$$

where θ denote the network parameters of decoder. $p_\theta(\mathbf{x}) = \int p_\theta(\mathbf{x}|\mathbf{z}) p_\theta(\mathbf{z}) d\mathbf{z}$ with $p_\theta(\mathbf{z})$ denotes the prior distribution of feature representations. According to the Bayesian formula, one can obtain that $p_\theta(\mathbf{x}|\mathbf{z})p_\theta(\mathbf{z}) = p_\theta(\mathbf{z}|\mathbf{x})p_\theta(\mathbf{x})$. Unfortunately, the posterior distribution $p_\theta(\mathbf{z}|\mathbf{x})$ and the marginal distribution $p_\theta(\mathbf{x})$ are both unknown, which makes the logarithmic likelihood function $\log p_\theta(\mathbf{X})$ difficult to calculate. Therefore, the evidence lower bound (ELBO) is usually used instead of $\log p_\theta(\mathbf{X})$ as the optimization objective of VAE, that is,

$$\log p_\theta(\mathbf{x}) \geq L_{ELBO}(\boldsymbol{\theta}, \boldsymbol{\varphi}; \mathbf{x}) = \mathbb{E}_{q_{\boldsymbol{\varphi}}(\mathbf{z}|\mathbf{x})}\left[\log p_\theta(\mathbf{z}|\mathbf{x})\right] - \mathrm{KL}\left[q_{\boldsymbol{\varphi}}(\mathbf{z}|\mathbf{x}) \parallel p_\theta(\mathbf{z})\right], \tag{2}$$

where $p_\theta(\mathbf{x}|\mathbf{z})$ denotes a decoder, $q_{\boldsymbol{\varphi}}(\mathbf{z}|\mathbf{x})$ denotes an encoder with $\boldsymbol{\varphi}$ denotes its network parameters, while $\mathrm{KL}(\cdot)$ denotes the Kullback–Leibler (KL) divergence.

The first term on the right-hand side of the equal sign in Eq. (2) needs to be sampled according to $q_{\boldsymbol{\varphi}}(\mathbf{z}|\mathbf{x}) \sim \mathcal{N}(\mathbf{z}; \boldsymbol{\mu}, \boldsymbol{\sigma}^2\mathbf{I})$ to obtain the feature representation $\mathbf{z}$, where $\boldsymbol{\mu} = (\mu_1, \dots, \mu_{D'})^T$ and $\boldsymbol{\sigma}^2\mathbf{I} = \mathrm{diag}\left(\sigma_1^2, \dots, \sigma_{D'}^2\right)$ are mean vector and diagonal covariance matrix, respectively. However, the sampling operation may make the Monte Carlo estimation of the mathematical expectation non-differentiable, and thus the gradient cannot be calculated. Therefore, the re-parameterization technique is required to deal with this problem. That is to say, the noise variable $\boldsymbol{\epsilon} \sim \mathcal{N}(\mathbf{0}, \mathbf{I})$ is utilized to get $\mathbf{z} = \boldsymbol{\mu} + \boldsymbol{\sigma} \odot \boldsymbol{\epsilon}$, so that the Monte Carlo estimation of the expectation operation can be differentiable. The operator $\odot$ denotes the element-wise product. Thereafter,

$$\mathbb{E}_{q_{\boldsymbol{\varphi}}(\mathbf{z}|\mathbf{x})}\left[\log p_\theta(\mathbf{x}|\mathbf{z})\right] = \frac{1}{N}\sum_{j=1}^N \log p_\theta(\mathbf{x}|\mathbf{z}_j), \tag{3}$$

where N is the number of Monte Carlo samples.

The second term on the right-hand side of the equal sign in Eq. (2) can be rewritten as

$$\begin{aligned}\mathrm{KL}\left[q_{\boldsymbol{\varphi}}(\mathbf{z}|\mathbf{x}) \parallel p_\theta(\mathbf{z})\right] &= \mathrm{KL}\left[\mathcal{N}(\boldsymbol{\mu}, \boldsymbol{\sigma}^2\mathbf{I}) \parallel \mathcal{N}(\mathbf{0}, \mathbf{I})\right] \\ &= \frac{1}{2}\sum_{d'=1}^{D'}\left(\mu_{d'}^2 + \sigma_{d'}^2 - \log\sigma_{d'}^2 - 1\right),\end{aligned} \tag{4}$$

where $\mu_{d'}$ and $\sigma_{d'}$ are the d'-th elements of $\boldsymbol{\mu}$ and $\boldsymbol{\sigma}$, respectively.

2.2. DMSVDD

To deal with the normal data with multi-modal distribution and alleviate the hypersphere collapse problem of Deep SVDD, Ghafoori and Leckie [6] designed deep multi-sphere SVDD (DMSVDD). Different from Deep SVDD, DMSVDD generates compact representations for different underlying distributions of the given data and transfers the obtained representations into multiple hyperspherical clusters rather than embeds them into a single hypersphere. Moreover, DMSVDD can automatically adjust the number of hyperspherical clusters during its optimization procedure.

Given the input space $\mathcal{X} \subseteq \mathcal{R}^D$ and the feature space $\mathcal{F} \subseteq \mathcal{R}^{D'}$, a deep neural network with L hidden layers can thus be expressed as $\phi(\cdot;\mathcal{W})$, where $\mathcal{W} = \{\mathbf{W}^1, \dots, \mathbf{W}^L\}$ denotes the set of network weights. Given the data set $\mathbf{X} = \{\mathbf{x}_i\}_{i=1}^n$, the feature representation of the ith input data $\mathbf{x}_i$ is expressed as $\phi(\mathbf{x}_i;\mathcal{W})$. Furthermore, the cluster center $\mathbf{c}_m$ for $\phi(\mathbf{x}_i;\mathcal{W})$ is determined by the nearest neighbor prototype rule, i.e.,

$$\mathbf{c}_m = \underset{\mathbf{c}_k \in \{\mathbf{c}_1,\dots,\mathbf{c}_M\}}{\arg\min} \|\phi(\mathbf{x}_i;\mathcal{W}) - \mathbf{c}_k\|. \tag{5}$$

The objective function of DMSVDD is given by

$$\min_{\mathbf{r},\mathcal{W}} \frac{1}{M}\sum_{m=1}^{M} r_m^2 + \frac{1}{\nu n}\sum_{i=1}^{n} \max\{0, \|\phi(\mathbf{x}_i;\mathcal{W}) - \mathbf{c}_m\|^2 - r_m^2\} + \frac{\lambda}{2}\sum_{l=1}^{L}\|\mathbf{W}^l\|_F^2, \tag{6}$$

where $\mathbf{r} = (r_1, \dots, r_M)$ with r_m denotes the radius of the mth hypersphere, $\nu \in (0,1)$ is the trade-off parameter, $\lambda > 0$ is the regularization hyperparameter, and $\|\cdot\|_F$ denotes the Frobenius norm. Note that during the optimization procedure of DMSVDD, the number of hyperspheres is automatically adjusted by eliminating hyperspheres that contain too few feature representations.

Given a test data $\mathbf{x}_t$, its corresponding hypersphere center $\mathbf{c}_m$ and radius r_m is obtained in the feature space by the nearest neighbor prototype rule. Moreover, the anomaly score of $\mathbf{x}_t$ is computed by

$$S(\mathbf{x}_t) = \|\phi(\mathbf{x}_t;\mathcal{W}^*) - \mathbf{c}_m\|^2 - r_m^2, \tag{7}$$

where $\mathcal{W}^*$ denotes the optimal network connection weights. If $S(\mathbf{x}_t) > 0$, $\mathbf{x}_t$ is identified as the anomalous data. Otherwise, $\mathbf{x}_t$ is classified as the normal data.

3. DMSVDD-DRL

In this section, the proposed anomaly detection method is described in detail from two aspects, i.e., model structure and algorithm implementation.

3.1. Model structure

To better obtain the key information of the normal data and effectively solve the hypersphere collapse problem of Deep SVDD, deep multi-sphere SVDD based on disentangled representation learning (DMSVDD-DRL) is proposed. The model structure of DMSVDD-DRL is shown in Fig. 1. One can observe from Fig. 1 that DMSVDD-DRL consists of a VAE and multiple hyperspheres. Therefore, the mapping network of DMSVDD-DRL uses VAE as its basic architecture. The learning method based on disentangled representation learning is introduced into the feature space to disentangle feature representations into generative representations and discriminative representations. Moreover, the prior of the obtained generative representations is assumed to obey the Gaussian distribution, while the prior of the obtained discriminative representations obeys mixture t-distribution. Besides enriching the feature learning ability, DMSVDD-DRL also improves the robustness against outliers. To achieve more key features of the normal data, the augmented data are generated by rotating, translating and enhancing image contrast of the input data. The generative and discriminative representations are then obtained through the mapping network. Furthermore, the discriminative representations of the input data and those of the augmented data are combined to construct multiple hyperspheres. The decoder of VAE couples the disentangled representations and reconstructs the input data and the augmented data separately by minimizing their reconstruction errors as much as possible. In addition, the outputs of the input and augmented data after passing through the first layer of the encoder network are combined and further inputted into the network to obtain the feature representations of the input data. Hence, the information of the augmented data can be sufficiently utilized.

Suppose that the input data $\mathbf{x}$ is generated by some random process that involves an unobserved continuous random variable $\mathbf{z}$, i.e., the feature representation of $\mathbf{x}$. Towards DMSVDD-DRL, it is assumed that the random variable $\mathbf{z}$ can be separated into the generative and discriminative representations, that is, $\mathbf{z} = \mathbf{z}^g \oplus \mathbf{z}^d$, where $\mathbf{z}^g \in \mathcal{R}^{D_g}$ represents the generative representation storing the information about data generation style, $\mathbf{z}^d \in \mathcal{R}^{D_d}$ denotes the discriminative representation preserving the feature information of the normal data, and $\oplus$ denotes the operation of concatenation. To enhance the robustness of DMSVDD-DRL, we assume that $\mathbf{z}^g$ obeys Gaussian distribution, while $\mathbf{z}^d$ obeys mixture t-distribution. Moreover, the number of component distributions in mixture t-distribution is denoted as K.

It is assumed that all the input data can be represented by a set of K clusters. To generate the input data $\mathbf{x}$ corresponding to the kth cluster, the probability distribution of $\mathbf{z}$ is defined as

$$p(\mathbf{z}|k) = p(\mathbf{z}^g)p(\mathbf{z}^d|k) = \mathcal{N}(\mathbf{z}^g|\boldsymbol{\mu}^g, (\boldsymbol{\sigma}^g)^2\mathbf{I})\mathcal{S}(\mathbf{z}^d|\boldsymbol{\mu}_k^d, (\boldsymbol{\sigma}_k^d)^2\mathbf{I}, \upsilon_k^d), \tag{8}$$

where the generative representation $\mathbf{z}^g$ is only related to the generation style while not related to the cluster index k, $\boldsymbol{\mu}^g$ and $\boldsymbol{\sigma}^g$ are respectively the mean and standard deviation of the Gaussian distribution, the discriminative representation $\mathbf{z}^d$ is related to the cluster index k, $\boldsymbol{\mu}_k^d$, $\boldsymbol{\sigma}_k^d$ and υ_k^d are respectively the mean, standard deviation and degree of freedom for the t-distribution corresponding to the kth cluster, while $\mathcal{S}(\mathbf{z}^d|\boldsymbol{\mu}_k^d, (\boldsymbol{\sigma}_k^d)^2\mathbf{I}, \upsilon_k^d)$ denotes the probability density function of t-distribution, which is given by [13]

$$\mathcal{S}(\mathbf{z}^d|\boldsymbol{\mu}_k^d, (\boldsymbol{\sigma}_k^d)^2\mathbf{I}, \upsilon_k^d) = \frac{\Gamma\left(\upsilon_k^d/2 + D_d/2\right)|(\boldsymbol{\sigma}_k^d)^2\mathbf{I}|^{-\frac{1}{2}}}{\Gamma\left(\upsilon_k^d/2\right)(\upsilon_k^d\pi)^{D_d/2}}\left(1 + \frac{\Delta^2}{\upsilon_k^d}\right)^{-\frac{\upsilon_k^d + D_d}{2}}, \tag{9}$$

where $\Gamma(y) = \int_0^\infty t^{y-1}e^{-t}dt$ is the Gamma function and $\Delta^2 = (\mathbf{z}^d - \boldsymbol{\mu}_k^d)^T\left[(\boldsymbol{\sigma}_k^d)^2\mathbf{I}\right]^{-1}(\mathbf{z}^d - \boldsymbol{\mu}_k^d)$ is the square of the Mahalanobis distance. When $\upsilon \to \infty$, t-distribution degenerates to Gaussian distribution. In comparison with the Gaussian distribution with the same $\boldsymbol{\mu}_k^d$ and $(\boldsymbol{\sigma}_k^d)^2\mathbf{I}$, t-distribution has a longer tail, which makes it more robust against outliers. The curves of the t-distribution with different values of the degrees of freedom are illustrated in Fig. 2.

Let the prior distribution be expressed as $p(\mathbf{z}) = \sum_{k=1}^K \pi_k p(\mathbf{z}|k)$, where π_k denotes the mixture coefficient of the kth component distribution. Moreover, k obeys the categorical distribution with parameter $\boldsymbol{\pi}$, i.e., $p(k) = Cat(k|\boldsymbol{\pi})$, where $\boldsymbol{\pi} = (\pi_1, \dots, \pi_K)$, $\sum_{k=1}^K \pi_k = 1$ and $\pi_k \geq 0$. Towards the kth cluster, the representations $\mathbf{z}^d$ and $\mathbf{z}^g$ can be obtained by sampling in its corresponding feature space. The probability distribution of $\mathbf{x}$ generated by the decoder can thus be expressed as $p(\mathbf{x}|\mathbf{z}) = p(\mathbf{x}|\mathbf{z}^g, \mathbf{z}^d)$. The joint probability distribution $p(\mathbf{x}, \mathbf{z}, k)$ can be decomposed as

$$p(\mathbf{x}, \mathbf{z}, k) = p(\mathbf{x}, \mathbf{z}^d, \mathbf{z}^g, k) = p(\mathbf{x}|\mathbf{z}^d, \mathbf{z}^g)p(\mathbf{z}^g)p(\mathbf{z}^d|k)p(k), \tag{10}$$

where $\mathbf{x}$ and k are independent under the condition that $\mathbf{z}^d$ and $\mathbf{z}^g$ are given.

Using Jensen's inequality, we can derive the lower bound of the logarithmic likelihood $\log p(\mathbf{x})$ as follows.

$$\begin{aligned}\log p(\mathbf{x}) &= \log \int_{\mathbf{z}} \sum_k p(\mathbf{x}, \mathbf{z}, k)d\mathbf{z} = \log \int_{\mathbf{z}^d}\int_{\mathbf{z}^g} \sum_k p(\mathbf{x}, \mathbf{z}^d, \mathbf{z}^g, k)d\mathbf{z}^d d\mathbf{z}^g \\ &\geq \mathbb{E}_{q(\mathbf{z}^d, \mathbf{z}^g, k|\mathbf{x})}\left[\log \frac{p(\mathbf{x}, \mathbf{z}^d, \mathbf{z}^g, k)}{q(\mathbf{z}^d, \mathbf{z}^g, k|\mathbf{x})}\right] = L_{ELBO}(\mathbf{x}),\end{aligned} \tag{11}$$

where $L_{ELBO}(\mathbf{x})$ denotes the ELBO. Hence, the optimization objective of VAE can be converted from maximizing the logarithmic likelihood $\log p(\mathbf{x})$ to maximizing the ELBO $L_{ELBO}(\mathbf{x})$. According to the assumed separability of feature representations, the variational posterior in (11) can be rewritten as

$$q(\mathbf{z}^d, \mathbf{z}^g, k|\mathbf{x}) = q(\mathbf{z}^g|\mathbf{x})q(\mathbf{z}^d, k|\mathbf{x}), \tag{12}$$

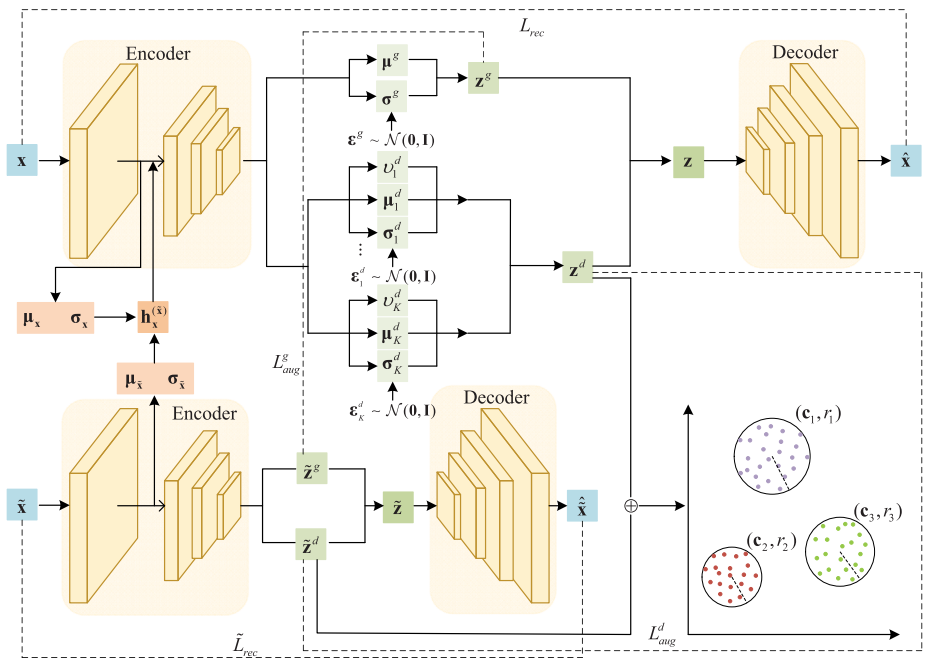

Fig. 1. The model structure of DMSVDD-DRL.

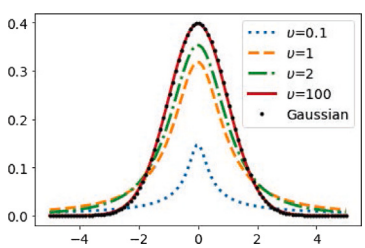

Fig. 2. The curves of the Gaussian distribution and the t-distribution with different values of degree of freedom υ.

where the variational posterior of generative representations $q(\mathbf{z}^g|\mathbf{x})$ and the variational posterior of discriminative representations $q(\mathbf{z}^d, k|\mathbf{x})$ approximate the real posteriors $p(\mathbf{z}^g|\mathbf{x})$ and $p(\mathbf{z}^d, k|\mathbf{x})$, respectively. According to (10) and (12), the ELBO in (11) can be rewritten as

$$\begin{aligned} L_{ELBO}(\mathbf{x}) =& \mathbb{E}_{q(\mathbf{z}^d,\mathbf{z}^g,k|\mathbf{x})}\left[\log p(\mathbf{x},\mathbf{z}^d,\mathbf{z}^g,k) - \log q(\mathbf{z}^d,\mathbf{z}^g,k|\mathbf{x})\right] \\ =& \mathbb{E}_{q(\mathbf{z}^d,\mathbf{z}^g,k|\mathbf{x})}\left[\log p(\mathbf{x}|\mathbf{z}^d,\mathbf{z}^g) + \log p(\mathbf{z}^g) + \log p(\mathbf{z}^d|k) + \log p(k)\right. \\ & \left. - \log q(\mathbf{z}^g|\mathbf{x}) - \log q(\mathbf{z}^d,k|\mathbf{x})\right] \\ =& \mathbb{E}_{q(\mathbf{z}^d,\mathbf{z}^g,k|\mathbf{x})}\left[\log p(\mathbf{x}|\mathbf{z}^d,\mathbf{z}^g)\right] - \mathrm{KL}\left(q(\mathbf{z}^g|\mathbf{x}) \parallel p(\mathbf{z}^g)\right) \\ & - \mathrm{KL}\left(q(\mathbf{z}^d,k|\mathbf{x}) \parallel p(\mathbf{z}^d,k)\right) = L_{rec} - L_g - L_d, \end{aligned} \tag{13}$$

where L_{rec} represents the reconstruction loss between the input and reconstructed data, L_g denotes the generation loss related to the generation style, and L_d denotes the discrimination loss related to class labels.

Let $q(\mathbf{z}^d, \mathbf{z}^g, k|\mathbf{x})$ be a mean-field distribution. It can be factorized as $q(\mathbf{z}^d, \mathbf{z}^g, k|\mathbf{x}) = q(\mathbf{z}^d, \mathbf{z}^g|\mathbf{x})q(k|\mathbf{x})$. If the encoder is defined as $f_{\boldsymbol{\varphi}}(\cdot)$, then the encoder can be represented as

$$\begin{aligned} f_{\boldsymbol{\varphi}}(\mathbf{x}) &= q(\mathbf{z}^d, \mathbf{z}^g|\mathbf{x}) = q(\mathbf{z}^d|\mathbf{x})q(\mathbf{z}^g|\mathbf{x}) \\ &= \mathcal{S}(\mathbf{z}^d|\breve{\boldsymbol{\mu}}^d, (\breve{\boldsymbol{\sigma}}^d)^2\mathbf{I}, \breve{\upsilon}^d)\mathcal{N}(\mathbf{z}^g|\breve{\boldsymbol{\mu}}^g, (\breve{\boldsymbol{\sigma}}^g)^2\mathbf{I}). \end{aligned} \tag{14}$$

Moreover, the decoder is defined as $g_{\boldsymbol{\theta}}(\mathbf{x}) = p(\mathbf{x}|\mathbf{z}^g, \mathbf{z}^d)$.

To optimize $L_{ELBO}(\mathbf{x})$, similar to VAE, it is necessary to sample from $q(\mathbf{z}^g|\mathbf{x}) = \mathcal{N}(\mathbf{z}^g|\breve{\boldsymbol{\mu}}^g, (\breve{\boldsymbol{\sigma}}^g)^2\mathbf{I})$. The ith generative representation can be obtained by the re-parameterization technique as

$$\mathbf{z}^g_i = \breve{\boldsymbol{\mu}}^g + \breve{\boldsymbol{\sigma}}^g \odot \epsilon^g_i, \tag{15}$$

where $\epsilon^g_i \sim \mathcal{N}(\mathbf{0}, \mathbf{I})$. Similarly, it is needed to sample from $q(\mathbf{z}^d|\mathbf{x}) = \mathcal{S}(\mathbf{z}^d|\breve{\boldsymbol{\mu}}^d, (\breve{\boldsymbol{\sigma}}^d)^2\mathbf{I}, \breve{\upsilon}^d)$. However, unlike Gaussian distribution, there is no closed-form solution when maximizing the logarithmic likelihood under t-distribution. Inspired by literatures [13,15], t-distribution can be expressed as a multivariate Gaussian distribution, i.e.,

$$\mathcal{S}(\mathbf{z}^d|\breve{\boldsymbol{\mu}}^d, (\breve{\boldsymbol{\sigma}}^d)^2\mathbf{I}, \breve{\upsilon}^d) = \mathcal{N}(\mathbf{z}^d|\breve{\boldsymbol{\mu}}^d, (\breve{\boldsymbol{\sigma}}^d)^2\mathbf{I}/u), \tag{16}$$

where u is a precision scalar, which relies on $\breve{\upsilon}^d$ and obeys the Gamma distribution as follows [25]

$$u \sim \mathcal{G}\left(\frac{\breve{\upsilon}^d}{2}, \frac{\breve{\upsilon}^d}{2}\right). \tag{17}$$

The probability density function of the Gamma distribution $\mathcal{G}(u|a, b)$ is given by [25]

$$\mathcal{G}(u|a, b) = \frac{1}{\Gamma(a)} b^a u^{a-1} e^{-bu}. \tag{18}$$

Therefore, $q(\mathbf{z}^d|\mathbf{x})$ can be expressed as $q(\mathbf{z}^d|\mathbf{x}) = \mathcal{N}(\mathbf{z}^d|\breve{\boldsymbol{\mu}}^d, (\breve{\boldsymbol{\sigma}}^d)^2\mathbf{I}/u)$. Unfortunately, the degree of freedom $\breve{\upsilon}^d$ does not appear in the distribution formula of $q(\mathbf{z}^d|\mathbf{x})$. The gradient of $\breve{\upsilon}^d$ thus cannot be updated when sampling directly from $q(\mathbf{z}^d|\mathbf{x})$. To deal with this problem, the re-parameterization technique can be utilized to obtain the ith discriminative representation as [15]

$$\mathbf{z}^d_i = \breve{\boldsymbol{\mu}}^d + \sqrt{\frac{\breve{\upsilon}^d}{2\breve{z}^d}}\breve{\boldsymbol{\sigma}}^d \odot \epsilon^d_i, \tag{19}$$

where $\breve{z}^d$ is sampled from the Gamma distribution $\breve{z}^d \sim \mathcal{G}\left(\frac{\breve{\upsilon}^d}{2}, 1\right)$ and $\epsilon^d_i \sim \mathcal{N}(\mathbf{0}, \mathbf{I})$. Furthermore, the distribution of $\breve{z}^d$ can be re-parameterized by [15]

$$\breve{z}^d = \left(\frac{\breve{\upsilon}^d}{2} - \frac{1}{3}\right)\left(1 + \frac{\epsilon}{\sqrt{9\breve{\upsilon}^d/2 - 3}}\right)^3, \tag{20}$$

where $\epsilon \sim \mathcal{N}(0, 1)$.

Hence, the ith representation $\mathbf{z}_i$ can be expressed as $\mathbf{z}_i = \mathbf{z}^g_i \oplus \mathbf{z}^d_i$. Moreover, $L_{ELBO}(\mathbf{x})$ can be rewritten as

$$L_{ELBO}(\mathbf{x}) = \frac{1}{N}\sum_{j=1}^{N}\sum_{r=1}^{D}\log p_{\boldsymbol{\theta}}(x_r|\mathbf{z}_j)$$

$$+\frac{1}{2}\sum_{d'=1}^{D'}\left[1+\log(\breve{\sigma}^{g}_{d'})^2-(\breve{\mu}^{g}_{d'})^2-(\breve{\sigma}^{g}_{d'})^2\right]$$
$$-\frac{1}{2}\sum_{k=1}^{K}q(k|\mathbf{x})\sum_{d'=1}^{D'}\left[\log(\bar{\sigma}^{d}_{kd'})^2+\frac{(\bar{\breve{\sigma}}^{d}_{d'})^2}{(\bar{\sigma}^{d}_{kd'})^2}+\frac{(\breve{\mu}^{d}_{d'}-\mu_{kd'})^2}{(\bar{\sigma}^{d}_{kd'})^2}\right]$$
$$+\sum_{k=1}^{K}q(k|\mathbf{x})\log\frac{\pi_k}{q(k|\mathbf{x})}+\frac{1}{2}\sum_{d'=1}^{D'}\left[1+\log(\bar{\breve{\sigma}}^{d}_{d'})^2\right], \tag{21}$$

where $\bar{\sigma}^d_k=\sqrt{\frac{\upsilon^d_k}{2z^d_k}}\sigma^d_k$ with $z^d_k=\left(\frac{\upsilon^d_k}{2}-\frac{1}{3}\right)\left(1+\frac{\epsilon}{\sqrt{9\upsilon^d_k/2-3}}\right)^3$, $\bar{\breve{\sigma}}^d=\sqrt{\frac{\breve{\upsilon}^d}{2\bar{z}^d}}\breve{\sigma}^d$, and N denotes the number of Monte Carlo samples.

To enhance the stability of the model during the training procedure, the augmented data are introduced into the input data. Towards the input data $\mathbf{X}$, their corresponding augmented data $\tilde{\mathbf{X}}$ are obtained by rotating, translating and enhancing image contrast. As mentioned above, the generative representation $\tilde{\mathbf{z}}^g$ and the discriminative representation $\tilde{\mathbf{z}}^d$ corresponding to the augmented data $\tilde{\mathbf{x}}$ can be obtained by the encoder network $f_{\boldsymbol{\varphi}}(\tilde{\mathbf{x}})$. Because the augmented data only change the position and color information but overlook the style and category of images, the generative representation $\tilde{\mathbf{z}}^g$ and the discriminative representation $\tilde{\mathbf{z}}^d$ generated by the augmented data $\tilde{\mathbf{x}}$ should respectively approximate $\mathbf{z}^g$ and $\mathbf{z}^d$ generated by the input data $\mathbf{x}$ as near as possible. Therefore, the augmentation loss between the input and augmented data can be expressed by the distance between their feature representations as follows.

$$L_{aug}=\|\mathbf{z}^g-\tilde{\mathbf{z}}^g\|^2+\|\mathbf{z}^d-\tilde{\mathbf{z}}^d\|^2. \tag{22}$$

To effectively utilize the augmented data, the outputs of the input and augmented data after passing through the first layer of the encoder network are combined. Moreover, the feature outputted by the first layer is standardized as

$$\mathbf{h}^{(\tilde{\mathbf{x}})}_{\mathbf{x}}=\boldsymbol{\mu}_{\tilde{\mathbf{x}}}+\boldsymbol{\sigma}_{\tilde{\mathbf{x}}}\odot(\mathbf{h}_{\mathbf{x}}-\boldsymbol{\mu}_{\mathbf{x}})\oslash\boldsymbol{\sigma}_{\mathbf{x}}, \tag{23}$$

where $\mathbf{h}_{\mathbf{x}}$ is the output vector of the first layer of the encoder network upon the input data $\mathbf{x}$, $\boldsymbol{\mu}_{\mathbf{x}}$ and $\boldsymbol{\sigma}_{\mathbf{x}}$ are respectively the mean and standard deviation of $\{\mathbf{h}_{\mathbf{x}_1},\dots,\mathbf{h}_{\mathbf{x}_n}\}$, $\boldsymbol{\mu}_{\tilde{\mathbf{x}}}$ and $\boldsymbol{\sigma}_{\tilde{\mathbf{x}}}$ are respectively the mean and standard deviation of the output vectors of the first layer of the encoder network on the augmented data $\tilde{\mathbf{X}}$, the operator $\oslash$ denotes the element-wise division, and $\mathbf{h}^{(\tilde{\mathbf{x}})}_{\mathbf{x}}$ denotes the input vector of the second layer of the encoder network. For the augmented data, the reconstruction loss between them and their corresponding reconstructed data is considered to extract more effective feature representations, which is given by

$$\tilde{L}_{rec}=\|\tilde{\mathbf{X}}-\hat{\tilde{\mathbf{X}}}\|^2. \tag{24}$$

In the pre-training stage, the parameters of the encoder network $\boldsymbol{\varphi}$ and those of the decoder network $\boldsymbol{\theta}$ are initialized by minimizing the reconstruction error between the input data and their corresponding reconstructed data. The objective function is thus represented as

$$\min_{\boldsymbol{\varphi},\boldsymbol{\theta}}\frac{1}{n}\sum_{i=1}^{n}\|\mathbf{x}_i-\hat{\mathbf{x}}_i\|^2. \tag{25}$$

After initializing the network parameters of the encoder and decoder, the parameters of each t-distribution π_k, $\boldsymbol{\mu}_k$, $\boldsymbol{\sigma}_k$ and υ_k with $k=1,\dots,K$ are initialized by a mixture t-distribution model. Furthermore, the encoder obtained in the pre-training stage is treated as the mapping network and only the discriminative representations are used in the anomaly detection process. Given the initial number of hyperspheres K_{init}, the K_{init} minimum volume hyperspheres using discriminative representations of the input data obtained through the mapping network are constructed. Moreover, the K-means algorithm is utilized to obtain the initial set of hypersphere centers $\mathbf{C}_{init}=\{\mathbf{c}_1,\dots,\mathbf{c}_{K_{init}}\}$.

In the training phase, the combination of discriminative representations $\mathbf{z}^c$ corresponding to both the input data $\mathbf{x}$ and the augmented data $\tilde{\mathbf{x}}$ can be obtained. To achieve key feature information of the normal data and ensure that the combinations of discriminative representations obtained by the encoder are enclosed by multiple minimum volume hyperspheres as much as possible, the loss function is given below.

$$L_{svdd}=\frac{1}{M}\sum_{m'=1}^{M}r^2_{m'}+\frac{1}{n}\sum_{i=1}^{n}\max\left(0,\|\mathbf{z}^c_i-\mathbf{c}_m\|^2-r^2_m\right), \tag{26}$$

where $\mathbf{z}^c_i=\mathbf{z}^d_i\oplus\tilde{\mathbf{z}}^d_i$, $\mathbf{z}^d_i$ and $\tilde{\mathbf{z}}^d_i$ are respectively obtained from $q(\mathbf{z}^d_i|\mathbf{x}_i)$ and $q(\tilde{\mathbf{z}}^d_i|\tilde{\mathbf{x}}_i)$, $\mathbf{C}=\{\mathbf{c}_1,\dots,\mathbf{c}_M\}$ denotes the multiple hypersphere centers in the feature space, M is the number of hyperspheres, $\mathbf{c}_m$ is the hypersphere center corresponding to $\mathbf{z}^c_i$ with $m=\arg\min_{m'}\|\mathbf{z}^c_i-\mathbf{c}_{m'}\|$, and $\mathbf{r}=(r_1,\dots,r_M)$ denotes the multiple hypersphere radii.

Combining (21), (22), (24) and (26), the training objective of DMSVDD-DRL is minimizing the following loss function

$$L=\alpha\left(L_{ELBO}+L_{aug}+\tilde{L}_{rec}\right)+L_{svdd}, \tag{27}$$

where α is the trade-off parameter.

During the training procedure, to adjust the number of hyperspheres and ensure the ability of the mapping network to achieve key features, an alternating optimization process is utilized. Towards all the combinations of discriminative representations $\{\mathbf{z}^c_1,\dots,\mathbf{z}^c_n\}$, their corresponding class–membership matrix $\mathbf{U}\in\mathcal{R}^{n\times M}$ are calculated by the nearest neighbor principle, where the element of $\mathbf{U}$, i.e., $u_{im}\in\{0,1\}$. When $m=\arg\min_{m'\in\{1,\dots,M\}}\|\mathbf{z}^c_i-\mathbf{c}_{m'}\|$, $u_{im}=1$. Otherwise, $u_{im}=0$. The class cardinality corresponding to the mth hypersphere center is $n_m=\sum_{i=1}^{n}u_{im}$. To find the appropriate number of minimum volume hyperspheres, when $n_m<\nu\times\max\left(n_1,\dots,n_M\right)$ ($\nu\in(0,1]$), let $r_m=0$. That is to say, the mth hypersphere is not large enough to be considered as a separable cluster, whose combinations of discriminative representations may belong to a neighboring larger hypersphere. Hence, the radius of the mth hypersphere is set to be zero. Otherwise, let $\{\mathbf{z}^c_{j_1},\dots,\mathbf{z}^c_{j_{n_m}}\}$ belong to the mth hypersphere. Then, r_m equals the $(1-\nu)$-quantile of $\{\|\mathbf{z}^c_{j_1}-\mathbf{c}_m\|,\dots,\|\mathbf{z}^c_{j_{n_m}}-\mathbf{c}_m\|\}$, which allows $\nu\times n_m$ discriminative representations to fall outside the hypersphere. Thereafter, the hypersphere radii $\mathbf{r}$ are fixed and the Adam optimization algorithm is utilized to update the parameters of the encoder and decoder. Furthermore, the hypersphere with $r_m=0$ is removed and the number of hyperspheres M is modified. By using the alternating optimization process, the proposed model can adjust the number of hyperspheres automatically, optimize the network connection weights, and thereby obtain the optimal model parameters.

The testing procedure of DMSVDD-DRL is illustrated in Fig. 3. Given a test data $\mathbf{x}_t$, its corresponding hypersphere center $\mathbf{c}_m$ and radius r_m are determined by the nearest neighbor principle. Furthermore, the distance from the discriminative representation $\mathbf{z}^d_t$ of $\mathbf{x}_t$ to the hypersphere center $\mathbf{c}_m$ is calculated and further utilized to calculate the anomaly score as follows.

$$S(\mathbf{x}_t)=\|\mathbf{z}^d_t-\mathbf{c}_m\|^2-r^2_m. \tag{28}$$

If $S(\mathbf{x}_t)>0$, $\mathbf{x}_t$ is identified as the anomalous data. Otherwise, $\mathbf{x}_t$ is classified as the normal data.

3.2. Algorithm implementation

The implementation procedure of the pre-training and training stages of DMSVDD-DRL is included in Algorithm 1, while the implementation procedure of testing stage is summarized in Algorithm 2. In the pre-training stage, $\mathbf{Z}=\{\mathbf{z}_i\}^n_{i=1}$ and $\hat{\mathbf{X}}=\{\hat{\mathbf{x}}_i\}^n_{i=1}$ denote the set of feature representations and the set of reconstructed data, respectively. For the Adam optimization algorithm in both the pre-training and the training stages, its two additional parameters, i.e., the exponential decay rate for first moment estimation and the exponential decay rate for second moment estimation are omitted for concision. In addition, $\mathbb{I}(\cdot)$ denotes the indicator function which takes values 0 and 1.

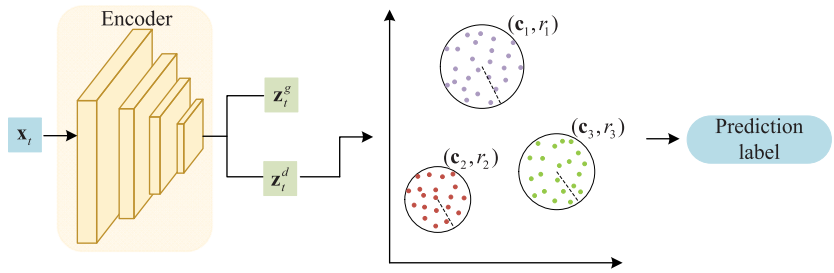

Fig. 3. The testing procedure of DMSVDD-DRL.

Algorithm 1 Pre-training and training stages of DMSVDD-DRL.

Require: Data set $\mathbf{X} = \{\mathbf{x}_i\}_{i=1}^n$, Number of pre-training iterations E_p, Learning rate for pre-training η_p, Initialized number of hyperspheres K_{init}, Number of training iterations E_t, Learning rate for training η_t.
Ensure: Parameter set of the encoder $\boldsymbol{\varphi}$, Hypersphere centers $\mathbf{C} = \{\mathbf{c}_m\}_{m=1}^M$, Hypersphere radii $\mathbf{r} = (r_1, \dots, r_M)$.

Initialization: Parameter sets of the encoder and decoder, i.e., $\boldsymbol{\varphi}$ and $\boldsymbol{\theta}$.
// Pre-training stage
for $t = 1$ to E_p **do**
  $\mathbf{Z} \leftarrow f_{\boldsymbol{\varphi}}(\mathbf{X})$. $\hat{\mathbf{X}} \leftarrow g_{\boldsymbol{\theta}}(\mathbf{Z})$.
  Calculate the average reconstruction error $\bar{\mathcal{E}}_{rec} = \frac{1}{n}\sum_{i=1}^{n} \|\hat{\mathbf{x}}_i - \mathbf{x}_i\|^2$ by (25).
  $(\boldsymbol{\varphi}, \boldsymbol{\theta}) \leftarrow \text{Adam}\big(\nabla_{(\boldsymbol{\varphi},\boldsymbol{\theta})}\bar{\mathcal{E}}_{rec}, (\boldsymbol{\varphi}, \boldsymbol{\theta}), \eta_p\big)$.
end for
$(\mathbf{C}_{init}, \mathbf{U}) \leftarrow \text{Kmeans}\big(f_{\boldsymbol{\varphi}}(\mathbf{X}), K_{init}\big)$.
// Training stage
Generate the augmented data $\tilde{\mathbf{X}} \leftarrow \text{Augment}(\mathbf{X})$.
$(\mathbf{Z}^g, \mathbf{Z}^d) \leftarrow f_{\boldsymbol{\varphi}}(\mathbf{X})$. $(\tilde{\mathbf{Z}}^g, \tilde{\mathbf{Z}}^d) \leftarrow f_{\boldsymbol{\varphi}}(\tilde{\mathbf{X}})$. $\mathbf{Z}^c = \mathbf{Z}^d \oplus \tilde{\mathbf{Z}}^d$.
for $t = 1$ to E_t **do**
  for $m = 1$ to M **do**
    $n_m = \sum_{i=1}^n u_{im}$.
    if $n_m < \nu \times \max(n_1, \dots, n_m)$ **then**
      $r_m = 0$;
    else
      $r_m \leftarrow (1-\nu)$-quantile of $\{\|\mathbf{z}_{j_q}^c - \mathbf{c}_m\|\}_{q=1}^{n_m}$.
    end if
  end for
  $\mathbf{Z} \leftarrow f_{\boldsymbol{\varphi}}(\mathbf{X})$. $\hat{\mathbf{X}} \leftarrow g_{\boldsymbol{\theta}}(\mathbf{Z})$. $\tilde{\mathbf{Z}} \leftarrow f_{\boldsymbol{\varphi}}(\tilde{\mathbf{X}})$. $\hat{\tilde{\mathbf{X}}} \leftarrow g_{\boldsymbol{\theta}}(\tilde{\mathbf{Z}})$.
  Calculate the loss function L by (27).
  $\boldsymbol{\varphi} \leftarrow \text{Adam}\big(\nabla_{\boldsymbol{\varphi}} L, \boldsymbol{\varphi}, \eta_t\big)$.
  $M = \sum_{m=1}^M \mathbb{I}(r_m \geq 0)$. Remove the hypersphere centers from $\mathbf{C}$ with their corresponding radii equal zero.
end for

Algorithm 2 Testing stage of DMSVDD-DRL.

Require: Test data $\mathbf{x}_t$, Encoder $f_{\boldsymbol{\varphi}}(\cdot)$, Hypersphere centers $\mathbf{C}$, Hypersphere radii $\mathbf{r}$.
Ensure: Anomaly score $S(\mathbf{x}_t)$, Prediction label of $\mathbf{x}_t$.
Get the discriminative representation $\mathbf{z}_t^d$ for $\mathbf{x}_t$ by (19).
Utilize the nearest neighbor principle to find the hypersphere center $\mathbf{c}_m$ and radius r_m for $\mathbf{z}_t^d$.
Compute the anomaly score $S(\mathbf{x}_t)$ by (28).
if $S(\mathbf{x}_t) > 0$ **then**
  $\mathbf{x}_t$ is the anomalous data.
else
  $\mathbf{x}_t$ is the normal data.
end if

According to literature [6], the time complexity of DMSVDD is the summation of the time complexity of deep convolutional autoencoders (DCAE) and that of the extra computations for the distances to the hypersphere centers. Towards the proposed DMSVDD-DRL, it changes the network structure of DMSVDD by substituting DCAE with VAE. Moreover, since the augmented data are introduced, the extra computations for DMSVDD-DRL is two times as many as that for DMSVDD. Taking the testing phase into consideration, the total time complexity of DMSVDD-DRL is

$$\mathcal{O}\left(E_p \sum_{q=1}^{Q} P_q^2 R_q^2 C_q^{in} C_q^{out}\right) + \mathcal{O}(2E_t nKd) + \mathcal{O}(n_t Kd). \tag{29}$$

The first term in (29) is the time complexity of VAE with E_p and Q denote the number of pre-training iterations and the number of network layers, respectively. Note that the time complexity of the qth convolutional layer is $\mathcal{O}(P_q^2 R_q^2 C_q^{in} C_q^{out})$ [26], where P_q and R_q denote the spatial size of the output feature map and the length of the filter, respectively. C_q^{in} and C_q^{out} are the number of input channels and the number of filters in the qth layer, respectively. The second term in (29) is the time complexity of the extra computations for the fine-tuning step, in which E_t denotes the number of training iterations, n is the number of training data, K is the number of hyperspheres, and d denotes the dimensionality of discriminative representation. In addition, the third term of (29) is the time complexity of the testing phase, in which n_t denotes the number of testing data.

4. Experimental results

To validate the effectiveness of the proposed method, it is compared with its related methods on MNIST, Fashion-MNIST, CIFAR-10 and CIFAR-100. The influence of different values of parameters upon the detection performance of the proposed method is analyzed. The robustness of the proposed method against outliers is checked. The efficiency of each module of the proposed method is verified through the ablation study. Moreover, our DMSVDD-DRL codes can be downloaded from https://github.com/hbuxing/DMSVDD_DRL.

4.1. Data sets and baseline methods

For the four data sets, their augmented data are all obtained by rotating the original images by random degrees in $[-25°, 25°]$, randomly translating within a factor of 0.25 times the image dimensions, and enhancing the contrast of images.

In the following experiments, the images in one of the ten (or twenty) classes are utilized as the normal data, while the images of the rest nine (or nineteen) classes are used as the anomalous data. Hence, ten (or twenty) different data sets for anomaly detection can be constructed for each benchmark data set. In the training stage, only the normal data in the original training set are used for training. In the testing stage, the test set in each original data set is utilized for testing and evaluation. Moreover, area under the receiver operating characteristic curve (AUC) is used as the performance metric.

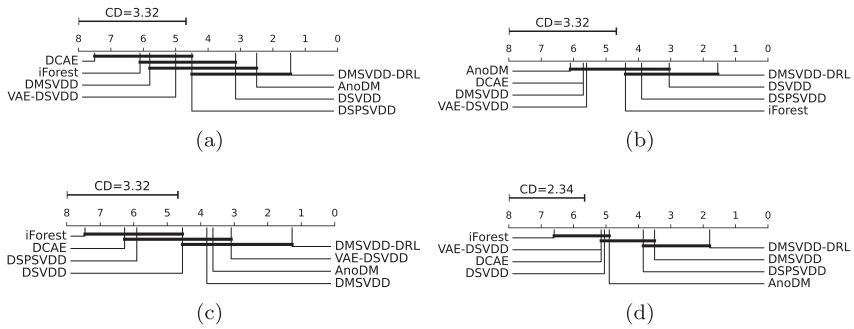

Fig. 4. CD diagrams of the Friedman test with the Nemenyi posthoc test at the 5% significance level on the four data sets. (a) MNIST, (b) Fashion-MNIST, (c) CIFAR-10, (d) CIFAR-100.

Table 1
The settings of some parameters of DMSVDD-DRL on the four data sets.

Data sets	D_g	D_d	η_p	η_t
MNIST	3	7	10^{-4}	2×10^{-3}
Fashion-MNIST	5	10	10^{-4}	10^{-4}
CIFAR-10	5	25	10^{-4}	10^{-4}
CIFAR-100	5	25	10^{-4}	10^{-4}

Note: D_g–Dimension of generative representation; D_d–Dimension of discriminative representation; η_p–Learning rate for pre-training; η_t–Learning rate for training.

To validate the detection performance of DMSVDD-DRL, it is compared with its seven pertinent methods, i.e., iForest [27], DCAE [28], DSVDD [4], DSPSVDD [5], DMSVDD [6], VAE-DSVDD [7] and AnoDM [17]. Note that the parameter settings of the seven pertinent methods are directly taken from their corresponding literatures. For the proposed DMSVDD-DRL, the two hyperparameters for the Adam algorithm, i.e., the exponential decay rate for first moment estimation β_1 and the exponential decay rate for second moment estimation β_2 are taken as 0.5 and 0.99, respectively. The numbers of pre-training iterations and training iterations, i.e., E_p and E_t are set to be 50 and 150, respectively. To prevent overfitting, linear decay operation is adopted for adaptively adjusting the learning rates η_p and η_t. The number of iterations for adjusting both η_p and η_t is set to be 10. For all the four benchmark data sets, the batch size during the pre-training and training processes is taken as 64. Both the encoder and decoder use the two-layer convolutional neural network. For the encoder, its first and second convolutional layers contain 64 and 128 convolutional kernels, respectively. The activation function uses the ReLU function. The number of component distributions for mixture t-distribution K is chosen in the domain $\{2,3,4,5,10\}$. The initial number of hyperspheres is taken as $K_{init}=10$. The parameter for determining the number of hyperspheres ν is set to be 0.1. The domain of the trade-off parameter α is $\{0.01,0.1,1\}$. The settings of some parameters on the four data sets are summarized in Table 1.

4.2. Results and analysis

The testing outcomes of the eight methods on the four benchmark data sets are summarized in Tables 2–5. From the results in Tables 2–5, we can get the following observations.

- In comparison with the shallow anomaly detection method, i.e., iForest, DMSVDD-DRL demonstrates better detection performance on all the cases. Especially, iForest achieves poor testing results on CIFAR-10 and CIFAR-100, which shows that iForest is not suitable for dealing with high-dimensional data sets. In contrast, DMSVDD-DRL utilizes the disentangled VAE network to obtain discriminative representations of the input data for anomaly detection, which may effectively enhance its ability to handle high-dimensional complex data.
- Compared with the reconstruction error based anomaly detection method, i.e., DCAE, except for the category '*Trouser*' of Fashion-MNIST together with the categories '*Fish*' and '*LNOS*' of CIFAR-100, DMSVDD-DRL achieves better performance on all the other cases. DMSVDD-DRL introduces an anomaly detection based objective into its loss function, which may improve its detection performance.
- In comparison with DSVDD and its variants, i.e., DSPSVDD, DMSVDD and VAE-DSVDD, except for the categories '*Coat*' and '*Ankle boot*' of Fashion-MNIST, the categories '*Ship*' and '*Truck*' of CIFAR-10 together with the categories '*Flowers*', '*FC*', '*Trees*', '*Vehicles 1*' and '*Vehicles 2*' of CIFAR-100, DMSVDD-DRL demonstrates better performance on all the other cases. DMSVDD-DRL utilizes the disentangled representation learning based VAE as its mapping network and automatically adjusts the number of hyperspheres, which makes it achieve better feature representations and detection performance.
- Compared with the disentanglement based anomaly detection method, i.e., AnoDM, DMSVDD-DRL achieves competitive results on most categories. Based on the disentangled representation learning, DMSVDD-DRL incorporates the augmented data and performs feature fusion after the first layer of the mapping network. Hence, more accurate information of discriminative representations can be learnt. At the same time, DMSVDD-DRL assumes that generative representations and discriminative representations respectively obey Gaussian distribution and mixture t-distribution, which sufficiently improves its robustness and fitting ability. Moreover, using discriminative representations to construct multiple minimum volume hyperspheres may make DMSVDD-DRL more effective in detecting the anomalous data.

Furthermore, the Friedman test with the Nemenyi posthoc test is utilized to check whether DMSVDD-DRL performs significantly better than the other methods on the four benchmark data sets. The critical difference (CD) diagrams of the test at the 5% significance level on the four data sets are shown in Fig. 4. The lower the rank value is, the better the detection performance is. Moreover, if the difference between the ranks of two anomaly detectors is higher than CD, the performances of these two detectors are significantly different. In addition, the detectors that are not significantly different in Fig. 4 are connected by solid lines.

From Fig. 4, one can get the following observations.

- DMSVDD-DRL achieves the lowest rank values on all the four benchmark data sets, which verifies that incorporating multiple hyperspheres and disentangled representation learning makes DMSVDD-DRL obtain better detection performance.
- DMSVDD-DRL is significantly different from DCAE on all the four data sets, significantly different from iForest and VAE-DSVDD on three data sets, significantly different from DSVDD, DMSVDD and AnoDM on two data sets, while significantly different from DSPSVDD on one data set. In summary, DMSVDD-DRL is significantly different from each of the seven pertinent methods on at least one data set.

Table 2
The testing results of the eight different methods on MNIST (AUC (%)). The best results are highlighted in bold.

Category	iForest	DCAE	DSVDD	DSPSVDD	DMSVDD	VAE-DSVDD	AnoDM	DMSVDD-DRL
0	98.02	97.65	98.02	97.91	97.41	98.62	98.50	**99.56**
1	97.35	98.32	99.75	99.42	99.54	96.59	98.70	**99.87**
2	88.64	85.42	91.73	86.25	89.52	91.69	**99.10**	97.58
3	89.91	86.74	91.91	90.21	90.93	91.83	**96.90**	95.28
4	92.75	86.59	94.96	93.56	90.60	92.14	**97.50**	96.54
5	85.56	78.25	88.53	87.52	89.52	92.48	97.60	**98.69**
6	95.69	94.61	98.32	98.05	96.67	96.34	98.30	**98.42**
7	92.04	92.32	94.61	95.34	93.68	92.65	97.70	**98.93**
8	89.91	86.54	93.91	93.81	86.27	89.11	**98.20**	96.62
9	93.58	90.42	96.52	95.12	92.28	93.22	92.80	**96.52**
Average	92.35	89.69	94.83	93.72	92.64	93.47	97.53	**97.80**

Table 3
The testing results of the eight different methods on Fashion-MNIST (AUC (%)).

Category	iForest	DCAE	DSVDD	DSPSVDD	DMSVDD	VAE-DSVDD	AnoDM	DMSVDD-DRL
T-shirt	86.85	87.42	88.37	89.92	85.36	87.27	84.40	**94.84**
Trouser	97.72	**98.43**	98.26	98.35	97.08	97.02	97.80	98.34
Pullover	87.12	83.96	85.27	85.81	84.92	86.99	78.30	**91.07**
Dress	90.15	90.15	92.18	92.31	90.85	86.34	88.60	**93.66**
Coat	89.83	84.93	**91.60**	90.94	86.31	88.76	76.30	**91.60**
Sandal	88.72	84.82	88.89	87.96	87.51	90.52	**99.00**	96.78
Shit	79.76	78.85	79.26	78.93	81.28	76.85	71.30	**85.40**
Sneaker	98.00	98.13	98.52	98.35	96.35	96.43	95.20	**99.06**
Bag	88.35	75.63	92.12	90.51	84.78	86.22	**98.00**	96.84
Ankle boot	97.94	95.32	**98.77**	92.32	97.91	96.44	94.40	98.02
Average	90.44	87.76	91.32	90.54	89.24	89.28	88.33	**94.56**

Table 4
The testing results of the eight different methods on CIFAR-10 (AUC (%)).

Category	iForest	DCAE	DSVDD	DSPSVDD	DMSVDD	VAE-DSVDD	AnoDM	DMSVDD-DRL
Plane	60.12	59.15	61.52	60.15	65.31	64.42	63.50	**77.95**
Car	50.84	57.42	63.71	56.93	70.50	65.37	**75.40**	71.67
Bird	49.23	48.96	49.09	48.23	67.35	57.51	58.90	**68.83**
Cat	55.15	58.41	56.84	57.74	57.16	60.30	60.80	**62.65**
Deer	49.86	54.03	58.23	55.12	74.26	61.66	56.40	**74.32**
Dog	58.53	62.23	63.54	62.41	58.84	64.34	63.80	**65.04**
Frog	42.93	51.24	60.18	56.53	74.31	66.38	60.00	**76.11**
Horse	55.15	58.67	62.47	60.32	63.42	64.01	64.80	**64.95**
Ship	74.26	76.82	**78.56**	76.74	70.37	76.53	64.20	78.14
Truck	58.96	67.35	70.13	68.15	68.53	**74.82**	71.80	72.56
Average	55.50	59.43	62.43	60.23	67.01	65.54	63.96	**71.22**

Table 5
The testing results of the eight different methods on CIFAR-100 (AUC (%)).

Category	iForest	DCAE	DSVDD	DSPSVDD	DMSVDD	VAE-DSVDD	AnoDM	DMSVDD-DRL
AM	57.67	62.70	57.31	57.47	63.97	58.32	60.28	**70.58**
Fish	57.71	**67.83**	57.57	59.98	63.76	57.48	58.12	67.77
Flowers	58.13	51.36	70.45	**73.30**	67.26	69.55	68.25	70.24
FC	49.58	52.94	58.61	62.70	59.74	56.49	**63.02**	61.68
FAV	56.12	51.02	66.15	69.55	64.55	64.14	58.74	**69.76**
HED	47.20	48.74	60.01	59.31	53.35	51.34	50.08	**63.37**
HF	53.94	51.86	56.29	59.69	58.83	55.67	52.64	**63.53**
Insects	57.22	60.07	61.41	64.57	64.38	57.24	63.32	**70.13**
LC	61.04	67.81	42.91	49.65	67.57	64.86	54.66	**73.18**
LMMOT	63.37	68.28	64.36	67.42	68.29	68.18	71.22	**76.33**
LNOS	65.02	**81.67**	76.39	78.09	77.60	74.57	72.23	77.86
LOAH	51.02	51.50	54.89	54.20	53.09	53.88	54.58	**65.95**
MSM	60.20	62.71	46.65	49.27	57.98	56.97	52.07	**71.28**
NII	56.21	65.66	45.36	46.17	67.46	65.83	64.11	**68.84**
People	49.96	49.52	54.73	57.21	57.18	49.58	56.34	**64.49**
Reptiles	57.23	60.72	56.26	55.51	65.00	56.15	58.65	**66.35**
SM	59.57	63.32	47.62	51.84	63.00	57.13	58.18	**68.09**
Trees	66.85	70.00	77.37	**77.50**	75.01	77.03	73.30	76.84
Vehicles 1	54.71	49.22	62.25	63.85	**64.12**	63.47	60.21	61.63
Vehicles 2	53.26	53.89	66.72	**66.88**	60.96	62.19	57.89	66.08
Average	56.80	59.54	59.17	61.21	63.66	61.00	60.39	**68.70**

Note: *AM*–Aquatic mammals; *FC*–Food containers; *FAV*–Fruit and vegetables; *HED*–Household electrical devices; *HF*–Household furniture; *LC*–Large carnivores; *LMMOT*–Large man-made outdoor things; *LNOS*–Large natural outdoor scenes; *LOAH*–Large omnivores and herbivores; *MSM*–Medium-sized mammals; *NII*–Non-insect invertebrates; *SM*–Small mammals.

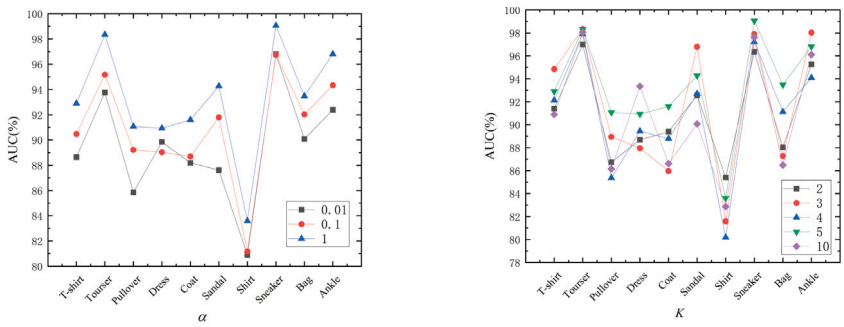

(a) (b)

Fig. 5. Performance of DMSVDD-DRL with different values of parameters on Fashion-MNIST. (a) The influence of different values of α, (b) The influence of different values of K.

4.3. Parameter analysis and ablation study

In the following, the influence of different values of the trade-off parameter α in (27) and the number of component distributions K on the performance of DMSVDD-DRL is analyzed. First, when K is fixed to be 5 while α takes different values, the testing results of DMSVDD-DRL on Fashion-MNIST are shown in Fig. 5(a). It can be observed from Fig. 5(a) that the change trends of DMSVDD-DRL on different categories are approximately the same under different values of α. When $\alpha = 1$, i.e., the weights of the ELBO L_{ELBO}, the augmentation loss L_{aug}, the reconstruction loss $\tilde{L}_{rec}$ and the SVDD loss L_{SVDD} are the same, DMSVDD-DRL achieves the highest AUC values. That is to say, the weights of the loss functions related to the mapping network and that of the SVDD loss are the same, so that the better feature representations can be achieved by the mapping network. Second, when α is fixed to be 1 while K takes different values, the testing outcomes of DMSVDD-DRL are shown in Fig. 5(b). Taking all categories into account, when $K = 5$, the AUC values obtained by DMSVDD-DRL are nearly the optimal. When the value of K is too large or too small, DMSVDD-DRL cannot achieve satisfying testing results. Hence, it is important to choose an appropriate number of component distributions. When the value of K is too small, the mixture t-distribution cannot accurately fit the distribution of the input data. Therefore, poor discriminative representations may be obtained and the subsequent anomaly detection may thus be influenced. When the value of K is too large, it is easy to cause the overfitting problem. Hence, DMSVDD-DRL is difficult to obtain accurate discriminative representations. Finally, in all the experiments, the trade-off parameter α and the number of component distributions K are respectively assigned with 1 and 5 for DMSVDD-DRL on Fashion-MNIST.

To improve the robustness of DMSVDD-DRL against outliers, its discriminative representations are assumed to obey the mixture t-distribution with a longer tail. Hence, to validate the effectiveness of this assumption, outliers with ratios of 5%, 10% and 15% of the training data are introduced into the training set of DMSVDD-DRL. Note that for each category of Fashion-MNIST, the outliers are randomly chosen from the remaining nine categories. In the following experiment, DMSVDD-DRL is compared with DMSVDD, DMSVDD-VAE-MoG and DMSVDD-DRL-MoG, where DMSVDD-VAE-MoG represents that the prior of feature representations obeys mixture Gaussian distribution and DMSVDD-DRL-MoG represents that the prior of discriminative representations changes from mixture t-distribution to mixture Gaussian distribution. The testing results of the four methods are summarized in Table 6. It can be observed from Table 6 that as the ratio of outliers increases, the performances of all the four anomaly detectors decreases. In comparison with the other three methods, DMSVDD-DRL demonstrates higher robustness and is less affected by outliers. Hence, assuming that discriminative representations obey mixture t-distribution makes DMSVDD-DRL more robust against outliers.

Table 6
The testing performances of the four different approaches with respect to different ratios of outliers occupying the whole training set upon Fashion-MNIST (AUC (%)).

Method	5%	10%	15%
DMSVDD	76.05	74.23	72.10
DMSVDD-VAE-MoG	85.49	81.57	77.85
DMSVDD-DRL-MoG	88.35	86.59	84.15
DMSVDD-DRL	**91.25**	**89.34**	**87.84**

To investigate the impact of different modules of DMSVDD-DRL on its detection performance, ablation study is conducted on Fashion-MNIST. Among the compared methods, DMSVDD-DRL-noaug represents the model trained without the augmented data. DMSVDD-DRL-nondis represents the model trained without disentangled representation learning but with the assumption that feature representations obey mixture Gaussian distribution. DMSVDD-DRL-Gau represents the model trained with the assumption that the prior of discriminative representations obeys Gaussian distribution. The outcomes of different methods are included in Table 7.

From Table 7, one can find that each module of DMSVDD-DRL contributes to its final detection performance. Introducing the augmented data can make DMSVDD-DRL more effectively extract discriminative representations. Using disentangled representation learning can make discriminative representations contain more category information. Assuming that the prior of discriminative representations obeys mixture t-distribution can make DMSVDD-DRL better fit the original data and obtain more valuable feature representations. By combining the above three modules to obtain discriminative representations, DMSVDD-DRL can construct more accurate minimum hyperspheres and improve its detection performance.

Finally, the running time of the eight methods on Fashion-MNIST are summarized in Table 8. It should be mentioned here that the outcomes in Table 8 are obtained from a machine with 60 GB RAM and GPU Nvidia GeForce RTX 4090, running Ubuntu 16.04.7 LST with PyTorch version 1.31.1 installed. One can easily find from Table 8 that iForest and DCAE get the least and the second least running time, respectively. The reason lies in that iForest is a shallow anomaly detection method while DCAE utilizes a simple convolutional neural network. In comparison with DSVDD and its three variants, i.e., DSPSVDD, DMSVDD and VAE-DSVDD, the proposed DMSVDD-DRL spends less running time. The reason is that DSVDD and its three variants take more epochs in their pre-training phase to obtain their optimal performances. Moreover, compared with DMSVDD-DRL, AnoDM takes more running time mainly because its training time complexity is the same as DMSVDD-DRL but its testing time complexity is higher.

5. Conclusion

To improve the detection performance of Deep SVDD, DMSVDD-DRL is proposed. It uses VAE as its mapping network to disentangle

Table 7
The outcome of the ablation study of DMSVDD-DRL on Fashion-MNIST (AUC (%)).

Category	DMSVDD-DRL-nonaug	DMSVDD-DRL-nondis	DMSVDD-DRL-Gau	DMSVDD-DRL-Mog	DMSVDD-DRL
T-shirt	91.43	90.66	90.23	91.65	**94.84**
Trouser	95.30	96.54	97.21	98.01	**98.34**
Pullover	88.36	88.94	87.58	89.51	**91.07**
Dress	91.47	92.02	90.54	91.40	**93.66**
Coat	89.88	89.60	89.43	90.09	**91.60**
Sandal	93.53	92.11	92.11	95.90	**96.78**
Shit	83.22	81.36	80.14	83.43	**85.40**
Sneaker	96.45	97.75	97.14	97.61	**99.06**
Bag	93.85	88.06	91.34	94.45	**96.84**
Ankle boot	96.32	96.80	96.02	97.83	**98.02**
Average	91.98	91.38	91.17	92.99	**94.56**

Table 8
The running time of the eight approaches on Fashion-MNIST (Second).

Method	iForest	DCAE	DSVDD	DSPSVDD	DMSVDD	VAE-DSVDD	AnoDM	DMSVDD-DRL
Time	24.24	26.08	297.08	304.39	299.56	338.66	286.75	269.16

feature representations into discriminative representations and generative representations, and assumes that the priors of these two types of representations obey mixture t-distribution and Gaussian distribution, respectively. During the training procedure, only discriminative representations are used to construct multiple minimum volume hyperspheres. Moreover, the augmented data are adopted to enrich the extracted features. Furthermore, the outputs of the input and augmented data are fused after the first layer of the mapping network. By jointly optimizing the VAE loss of the input data, the reconstruction error of the augmented data, the augmentation loss between the input and augmented data, the average radius of the multiple hyperspheres, and the average distance from discriminative representations to their corresponding hypersphere centers, the optimal network connection weights and the multiple minimum volume hyperspheres can be obtained. The experimental results demonstrate that DMSVDD-DRL achieves better detection performance on all the four data sets. Moreover, utilizing mixture t-distribution as the prior of discriminative representations improves the robustness of DMSVDD-DRL against outliers. The ablation study shows that the three modules of DMSVDD-DRL achieve positive influence on improving its detection performance.

In the future, there are three tasks for future investigation. First, one limitation of DMSVDD-DRL is that the number of component distributions for mixture t-distribution needs to be manually set. In our future work, non-parametric Bayes models will be considered to automatically determine the number of clusters of the given data, thereby automatically adjusting the number of component distributions. Second, assuming that the combination of Gaussian distribution and mixture t-distribution may not be suitable for certain data sets. In the future, more suitable distribution assumptions will be explored to better fit more data sets. Third, since DMSVDD-DRL introduces the augmented data by rotating, translating and enhancing image contrast of the input data, it is only suitable for processing images but not for processing tabular data. In our future work, the contrastive learning methods for tabular data, e.g., SCARF [29] will be referenced for tabular data augmentation.

CRediT authorship contribution statement

Hong-Jie Xing: Writing – review & editing, Writing – original draft, Supervision, Methodology, Funding acquisition, Formal analysis. **Hui-Nan Wu:** Visualization, Validation, Software. **Ping-Ping Zhang:** Software.

Declaration of competing interest

The authors declare that they have no known competing financial interests or personal relationships that could have appeared to influence the work reported in this paper.

Data availability

No data was used for the research described in the article.

Acknowledgments

This work is supported by the National Natural Science Foundation of China (No. 61672205), the Natural Science Foundation of Hebei Province, China (No. F2024201032), the High-Level Talents Research Start-Up Project of Hebei University, China (No. 521100222002), and the Innovation Capacity Enhancement Program-Science and Technology Platform Project of Hebei Province, China (No. 22567623H).

References

[1] L. Ruff, J.R. Kauffmann, R.A. Vandermeulen, G. Montavon, W. Samek, M. Kloft, T.G. Dietterich, K.-R. Müller, A unifying review of deep and shallow anomaly detection, Proc. IEEE 109 (5) (2021) 756–795.
[2] S.M. Erfani, S. Rajasegarar, S. Karunasekera, L. Christopher, High-dimensional and large-scale anomaly detection using a linear one-class SVM with deep learning, Pattern Recognit. 58 (2016) 121–134.
[3] D.P. Kingma, M. Welling, Auto-encoding variational Bayes, in: 2nd International Conference on Learning Representations, 2014.
[4] L. Ruff, N. Görnitz, L. Deecke, S.A. Siddiqui, R.A. Vandermeulen, A. Binder, E. Müller, M. Kloft, Deep one-class classification, in: Proceedings of the 35th International Conference on Machine Learning, 2018, pp. 4390–4399.
[5] Z. Zhang, X. Deng, Anomaly detection using improved deep SVDD model with data structure preservation, Pattern Recognit. Lett. 148 (2021) 1–6.
[6] Z. Ghafoori, C. Leckie, Deep multi-sphere support vector data description, in: Proceedings of the 2020 SIAM International Conference on Data Mining, 2020, pp. 109–117.
[7] Y. Zhou, X. Liang, W. Zhang, L. Zhang, X. Song, VAE-based Deep SVDD for anomaly detection, Neurocomputing 453 (2021) 131–140.
[8] H.J. Xing, P.P. Zhang, Contrastive deep support vector data description, Pattern Recognit. 143 (2023) 109820.
[9] H. Hojjati, N. Armanfard, DASVDD: Deep autoencoding support vector data descriptor for anomaly detection, IEEE Trans. Knowl. Data Eng. 36 (8) (2024) 3739–3750.
[10] Z. Chen, K. Zhao, S. Sun, J. Li, S. Wang, R. Sun, DMVSVDD: Multi-view data novelty detection with deep autoencoding support vector data description, Expert Syst. Appl. 240 (2024) 122443.
[11] Z. Jiang, Y. Zheng, H. Tan, B. Tang, H. Zhou, Variational deep embedding: An unsupervised and generative approach to clustering, in: Proceedings of the Twenty-Sixth International Joint Conference on Artificial Intelligence, 2017, pp. 1965–1972.
[12] B. Zong, Q. Song, M. Min, W. Cheng, C. Lumezanu, D. Cho, H. Chen, Deep autoencoding gaussian mixture model for unsupervised anomaly detection, in: 6th International Conference on Learning Representations, 2018.
[13] M. Svensén, C.M. Bishop, Robust Bayesian mixture modelling, Neurocomputing 64 (2005) 235–252.
[14] Y. Zhang, W. Fan, N. Bouguila, Unsupervised image categorization based on variational autoencoder and students-T mixture model, in: 2019 IEEE Symposium Series on Computational Intelligence, 2019, pp. 2403–2409.

[15] L. Yang, W. Fan, N. Bouguila, Clustering analysis via deep generative models with mixture models, IEEE Trans. Neural Netw. Learn. Syst. 33 (1) (2022) 340–350.
[16] X. Wang, H. Chen, S. Tang, Z. Wu, W. Zhu, Disentangled representation learning, IEEE Trans. Pattern Anal. Mach. Intell. (2024) 1–20, http://dx.doi.org/10.1109/TPAMI.2024.3420937.
[17] X. Li, I. Kiringa, T. Yeap, X. Zhu, Y. Li, Anomaly detection based on unsupervised disentangled representation learning in combination with manifold learning, in: 2020 International Joint Conference on Neural Networks, 2020, pp. 1–10.
[18] Z. Ding, Y. Xu, W. Xu, G. Parmar, Y. Yang, M. Welling, Z. Tu, Guided variational autoencoder for disentanglement learning, in: 2020 IEEE/CVF Conference on Computer Vision and Pattern Recognition, 2020, pp. 7917–7926.
[19] W. Wang, J. Bao, S. Guo, Neural generative model for clustering by separating particularity and commonality, Inform. Sci. 589 (2022) 813–826.
[20] L. Yang, W. Fan, N. Bouguila, Robust unsupervised image categorization based on variational autoencoder with disentangled latent representations, Knowl.-Based Syst. 246 (2022) 108671.
[21] Y. Mo, Y. Lei, J. Shen, X. Shi, H.T. Shen, X. Zhu, Disentangled multiplex graph representation learning, in: Proceedings of the 40th International Conference on Machine Learning, 2023, pp. 24983–25005.
[22] F. Ye, A.G. Bors, Self-supervised adversarial variational learning, Pattern Recognit. 148 (2024) 110156.
[23] Y. Gao, W. Feng, R. Xiao, L. He, Z. He, J. Lv, C. Tang, Improving generalized zero-shot learning via cluster-based semantic disentangling representation, Pattern Recognit. 150 (2024) 110320.
[24] B. Zhang, H. Xie, Z. Gao, Y. Wang, Choose what you need: Disentangled representation learning for scene text recognition removal and editing, in: 2024 IEEE/CVF Conference on Computer Vision and Pattern Recognition, 2024, pp. 28358–28368.
[25] C. Liu, D.B. Rubin, ML estimation of the t distribution using EM and its extensions, ECM and ECME, Statist. Sinica 5 (1995) 19–39.
[26] K. He, J. Sun, Convolutional neural networks at constrained time cost, in: 2015 IEEE Conference on Computer Vision and Pattern Recognition, 2015, pp. 5353–5360.
[27] F.T. Liu, K.M. Ting, Z.H. Zhou, Isolation forest, in: Proceedings of the 2008 Eighth IEEE International Conference on Data Mining, 2008, pp. 413–422.
[28] J. Masci, U. Meier, D. Cireşan, J. Schmidhuber, Stacked convolutional auto-encoders for hierarchical feature extraction, in: International Conference on Artificial Neural Networks, 2011, pp. 52–59.
[29] D. Bahri, H. Jiang, Y. Tay, D. Metzler, SCARF: Self-supervised contrastive learning using random feature corruption, in: International Conference on Learning Representations, 2022.

Hong-Jie Xing received his M.Sc. degree from Hebei University, Baoding, China in 2003 and his Ph.D. degree in Pattern Recognition and Intelligent Systems from Institute of Automation, Chinese Academy of Sciences, Beijing, China in 2007. His research interests include anomaly detection, deep learning, neural networks, kernel methods, and cluster analysis. Now, he works as a professor in Hebei University and serves as an Associate Editor for International Journal of Machine Learning and Cybernetics.

Hui-Nan Wu received her B.Sc. degree and M.Sc. degree from Hebei University, Baoding, China in 2019 and 2023, respectively. Now, she works in Hebei Meteorological Bureau. Her research interests include anomaly detection and deep learning.

Ping-Ping Zhang received her B.Sc. degree and M.Sc. degree from Hebei University, Baoding, China in 2020 and 2023, respectively. Now, she is pursuing her Ph.D. degree in Shenzhen University. Her research interests include anomaly detection and deep learning.