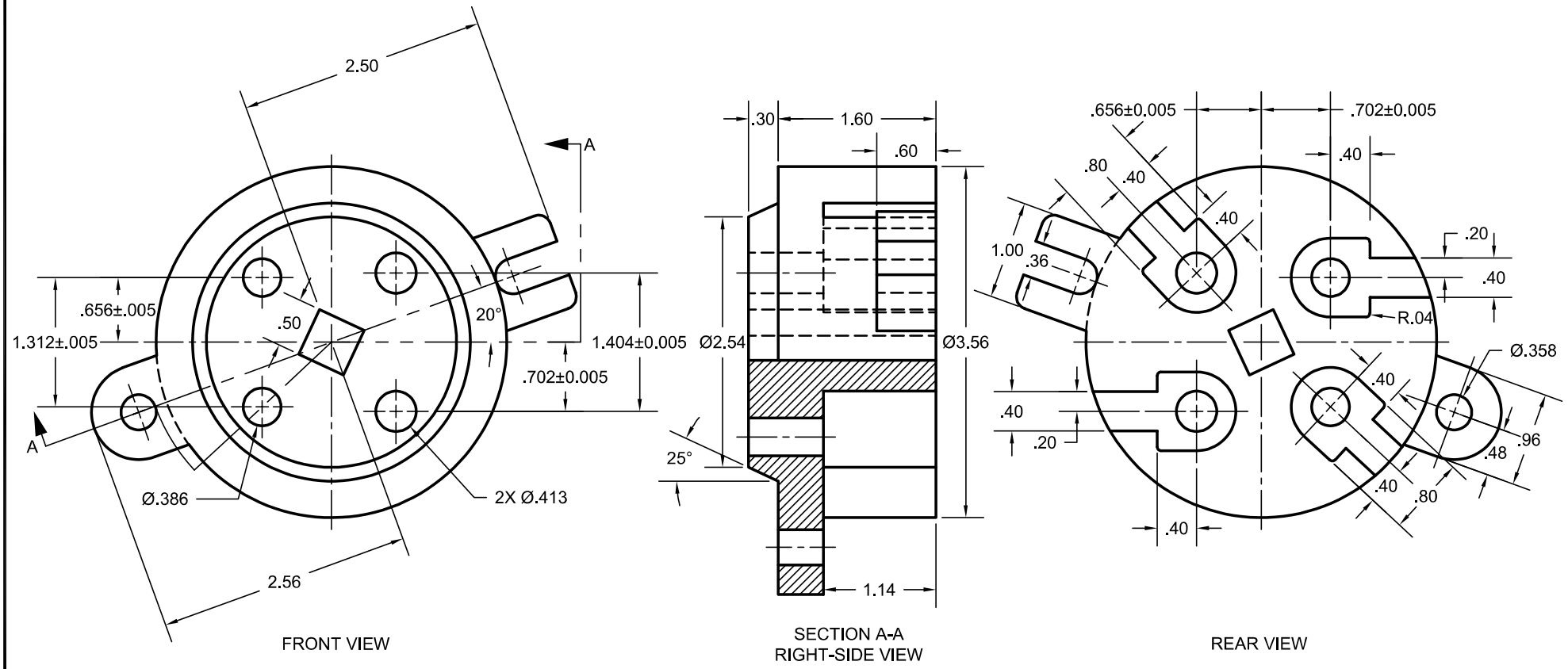

NOTE: UNLESS OTHERWISE STATED
TOLERANCE ON TWO-PLACE DIMENSIONS ±.02
TOLERANCE ON THREE-PLACE DIMENSIONS ±.010
TOLERANCE ON ANGLES ±0.5°

Community College of Allegheny County		
SPARK ADJUSTER		
Chris Eckels DRAWN BY:	EDD-240-SC61 CLASS:	A-81
04/10/2024 DATE:	1=1 SCALE:	