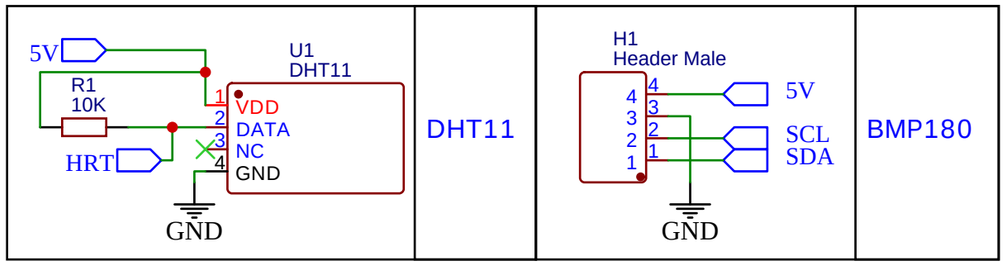





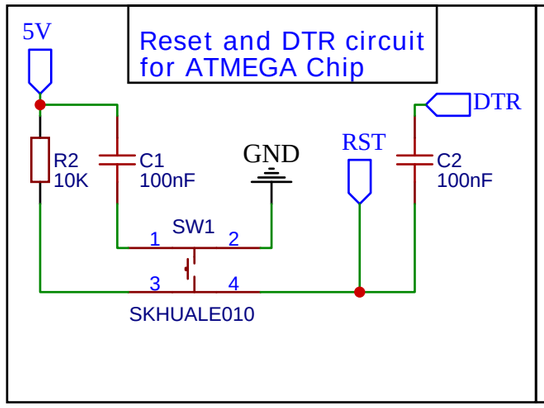


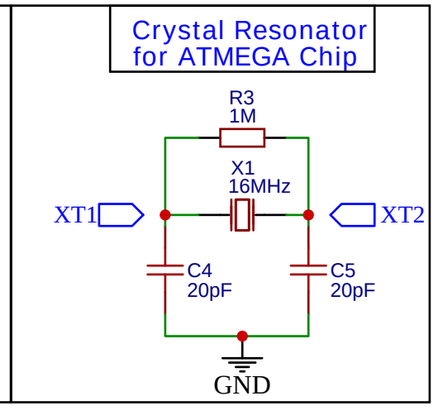


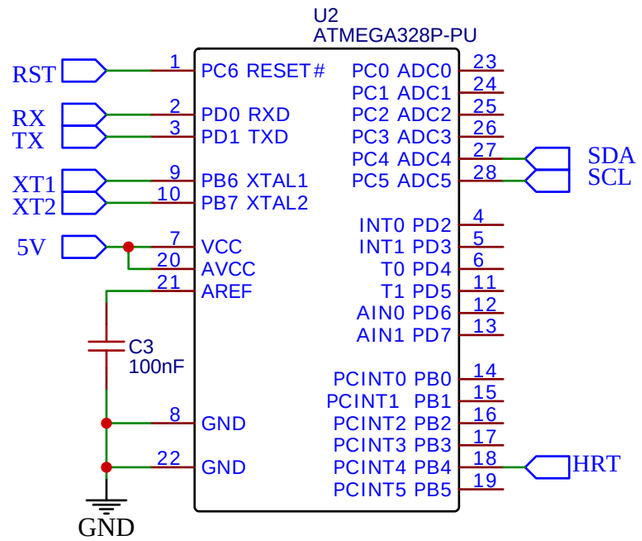


| | | |
|---|---|---|
| TITLE: Torricelli project | | REV: 1.0 |
| EasyEDA | Company: Ubicamatic | Sheet: 1/1 |
| | Date: 2020-08-04 Drawn By: César López | |