# WARRANTY CARD

| Customer Name | | Phone | |
|---|---|---|---|
| Address | | | |
| User ID | | Order Number | |
| Product Model | | Purchase Store | |
| Purchase Date | | Service Center | |
| Service Records | | | |
| Date | Fault Reason | | Resolution |
| | | | |
| | | | |
| | | | |
| | | | |

EU REP

EU001761551428711aMWu

**VAT SPEED SL**
Calle Antonio Salvador N99.1,28026
Madrid,Spain
services@vatspeed-eu.com

UK REP

UK001761550743438Mgcf

**GOAL REACH CONSULTING LTD**
OFFICE 1029 3 HARDMAN STREET 10TH FLOOR,
SPINNINGFIELDS MANCHESTER,UK M3 3HF
goalservice@hotmail.com

CE FC RoHS

**Shenzhen Jiacheng Electronic Equipment Co., Ltd.**
Address: 1 # B404, Xincanghai, Shatian Community, Kengzi Street, Shenzhen, Guangdong, China
Hotline: +8617129967775

SECUREYVILL

Retail Anti-Theft System

# Product User Manual

**RFID-CB**

After-sales service
Contact: +8617129967775 (WhatsApp)
E-mail: secureyvill@outlook.com

# Installation Steps

Please check all accessories (Deactivator, power adapter, data cable) for completeness. If anything is missing, contact us immediately. Included items are as follows:

Antenna

Cable Interface

Adapter

Mounting fittings

**Installation Preparation**

1. Prepare tools such as a screwdriver, electric drill, level, and measuring tape, ensuring they are functional. Gather materials like expansion bolts, screws, nuts, and washers as needed.
2. Inspect the anti-theft ceiling for damage and verify that the model meets requirements. Wear safety gear, including a helmet and gloves, to ensure safe installation.
3. Choose an appropriate installation area, avoiding strong magnetic interference, humidity, or other unfavorable conditions. Use a measuring tape and level to ensure the ceiling is installed level, secure, and aesthetically aligned.
4. Drill holes according to the markings, install expansion bolts and fasteners to secure the ceiling, and connect the power and signal cables, ensuring proper and safe connections.



# WARRANTY

Dear Customer,
Thank you for purchasing our product. To better serve you, please read, fill out, and keep this warranty card carefully after purchasing the product.

**Warranty Terms**

1. Please keep this warranty card safe as proof for repairs.
2. The product is covered by a warranty for 1 years from the date of purchase.
3. During the warranty period, under normal use and maintenance conditions, if the motherboard encounters a problem or a fault is confirmed upon inspection, we will provide free repairs and replacement of parts.
4. The company reserves the right to refuse service or charge material and service fees in the following cases during the warranty period:

   ① Failure to present this warranty card & valid purchase proof.
   ② Malfunctions or damages due to improper usage.
   ③ Damage resulting from abnormal external force.
   ④ Damage caused by unauthorized repair or disassembly by non-qualified personnel.
   ⑤ Malfunctions or damages arising from natural disasters or other force majeure events.
   ⑥ Other deliberate damages inflicted by human actions.
5. The company reserves the right to amend and interpret all content in this warranty.

# Precautions For Use

Before using this product, please read this user manual carefully and keep it for future reference.

1. Avoid contact with water. Do not use the product in or near containers such as water tanks, basins, or other vessels containing water.

2. Ensure all fasteners are secure and there is no looseness. The ceiling structure should be stable to prevent movement or tilting after installation.

3. After powering on, test the anti-theft functionality to ensure the device operates correctly and effectively detects objects.

4. Adjust the device's sensitivity or detection range based on actual needs to ensure optimal anti-theft performance.

5. Regularly inspect the ceiling structure, fasteners, and wiring to ensure there is no looseness or malfunction, preventing any impact on the anti-theft performance.

6. Special devices should be installed and maintained according to the manual to ensure long-term stable operation.

7. Improper disposal of this product may harm the environment. Please dispose of it responsibly through recycling.



# Installation Steps

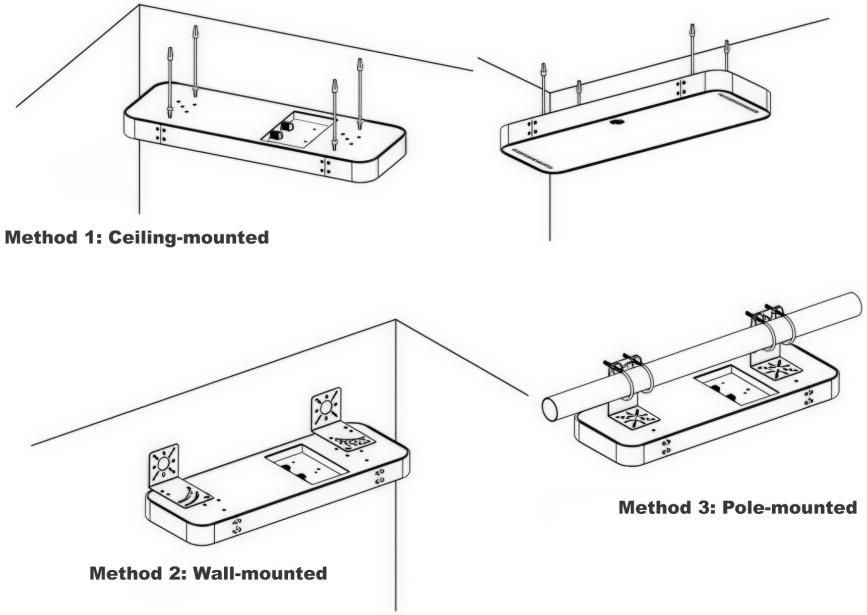


**Pole Installation**

1. Slide on the mounting fixture and adjust its position.
2. Secure it with screws to ensure stability.
3. Install the device, adjust the angle, and fix it securely.

**Ceiling Installation / Wall Installation**

1. Mark the installation position, drill holes, and insert expansion bolts securely.
2. Attach the mounting bracket or hanger and tighten the screws firmly.
3. Place the device, adjust the angle as needed, and ensure a stable installation.

# Software debugging

Before debugging, please install the necessary software on your computer and connect the device via network.

**Network Connection Steps**

The device connects to the computer via network with the default network parameters as follows:

IP address:192.168.1.X

Subnet mask:255.255.255.0

Gateway:192.168.1.1

**Search for Devices**

When connecting for the first time, multiple devices may exist on the same local network, so you need to obtain the device's network address. Use the device search function in the “Tools” menu of the software, as shown below:

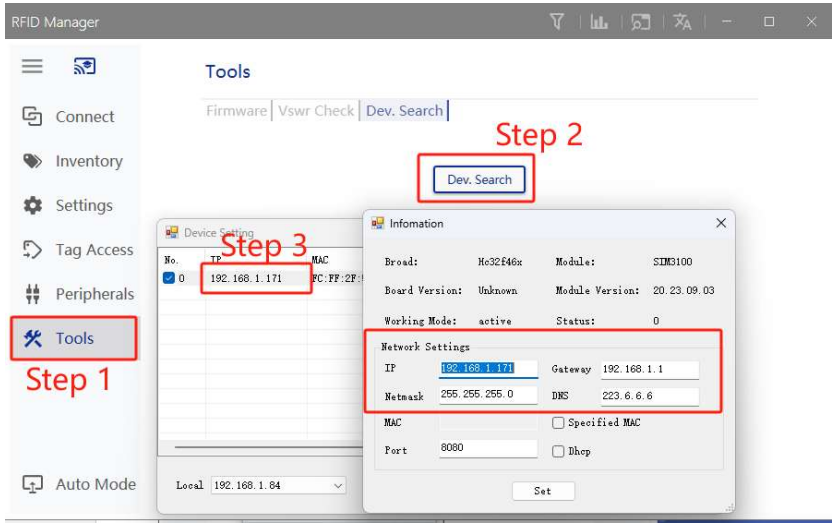




After clicking "Dev.Search", the software will automatically search for RFID system devices on the same network segment as the computer and display the found device addresses.

Double-click the device address to modify the IP. After modification, exit the software and restart it for the changes to take effect.

**Modify Power Settings**

1. Click "Auto Mode" and select "Static Parameter Configuration".
2. Enter the IP address and click "Get".
3. Once successfully executed, modify the value in the "RF Parameters" section (range: 0–3300).
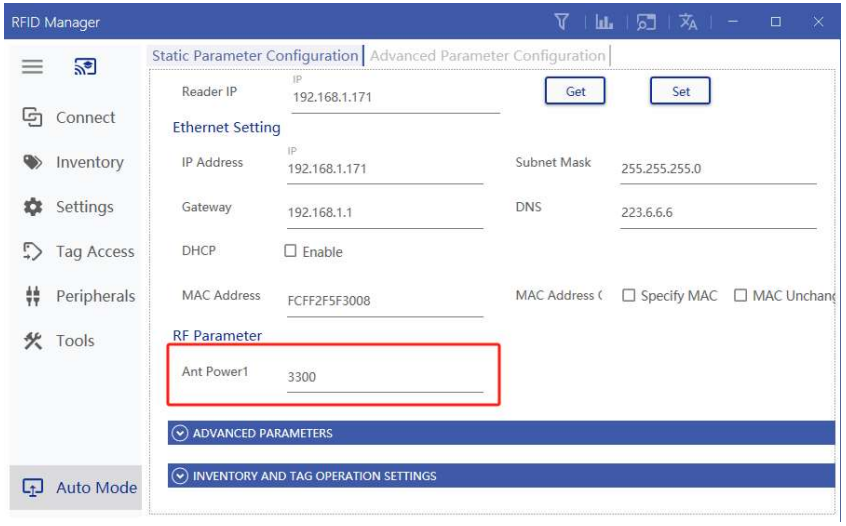
**Note:** It is recommended to set the value above 1000 to ensure optimal performance.