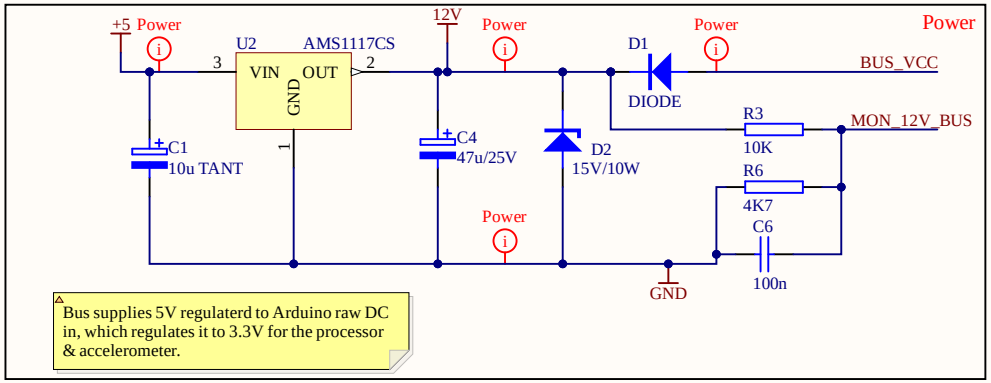

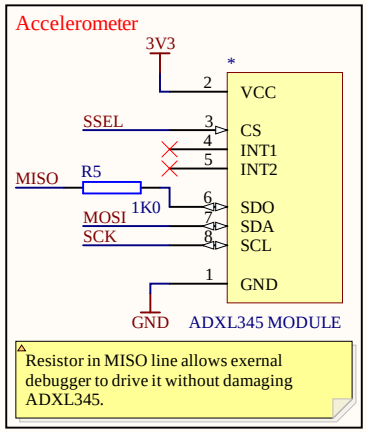

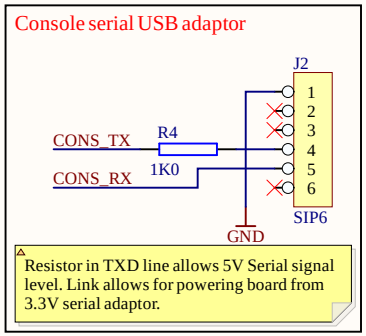

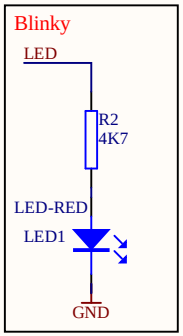

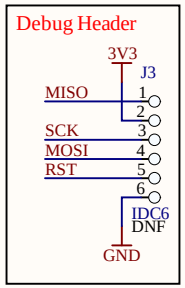

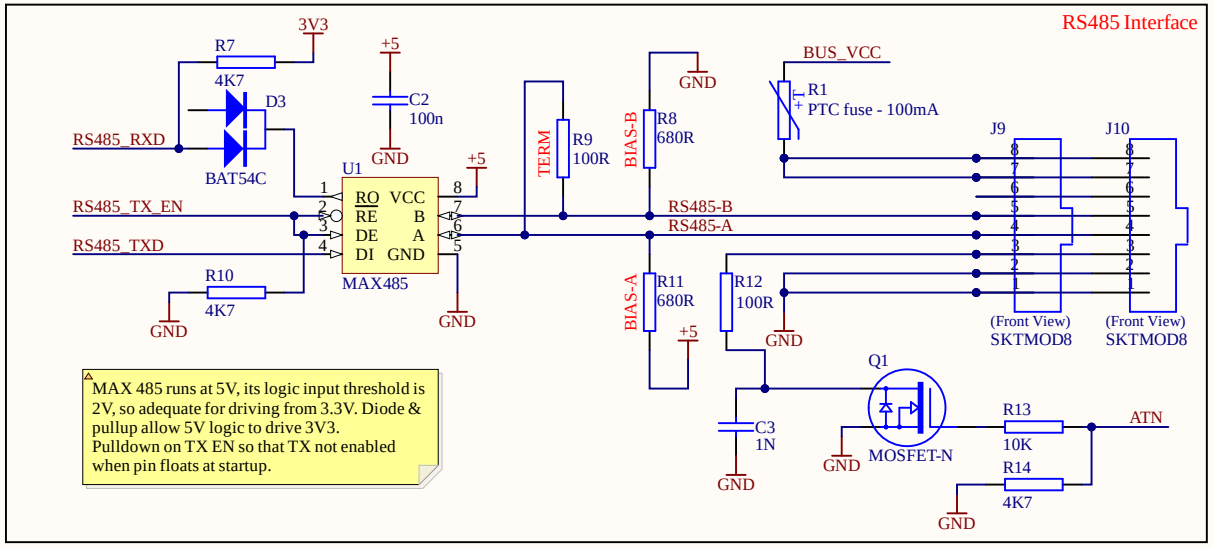

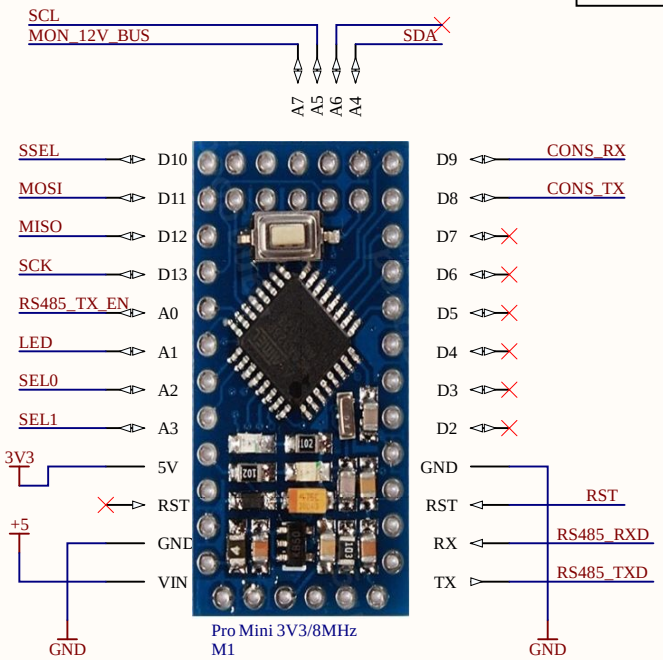

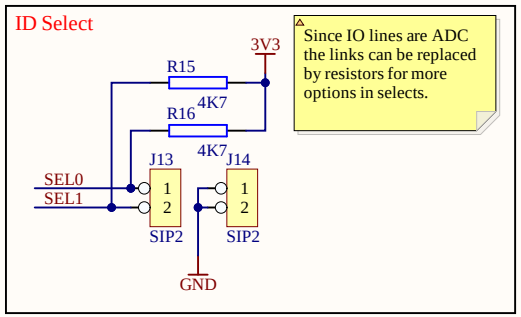

Title		
SBC2022 Sensor		
Size A4	Number	Revision 1
Date: 9/28/2022		Sheet of 1 of 1
File: P:\Bed Controls\..\Sensor.SchDoc		Drawn By: TomH