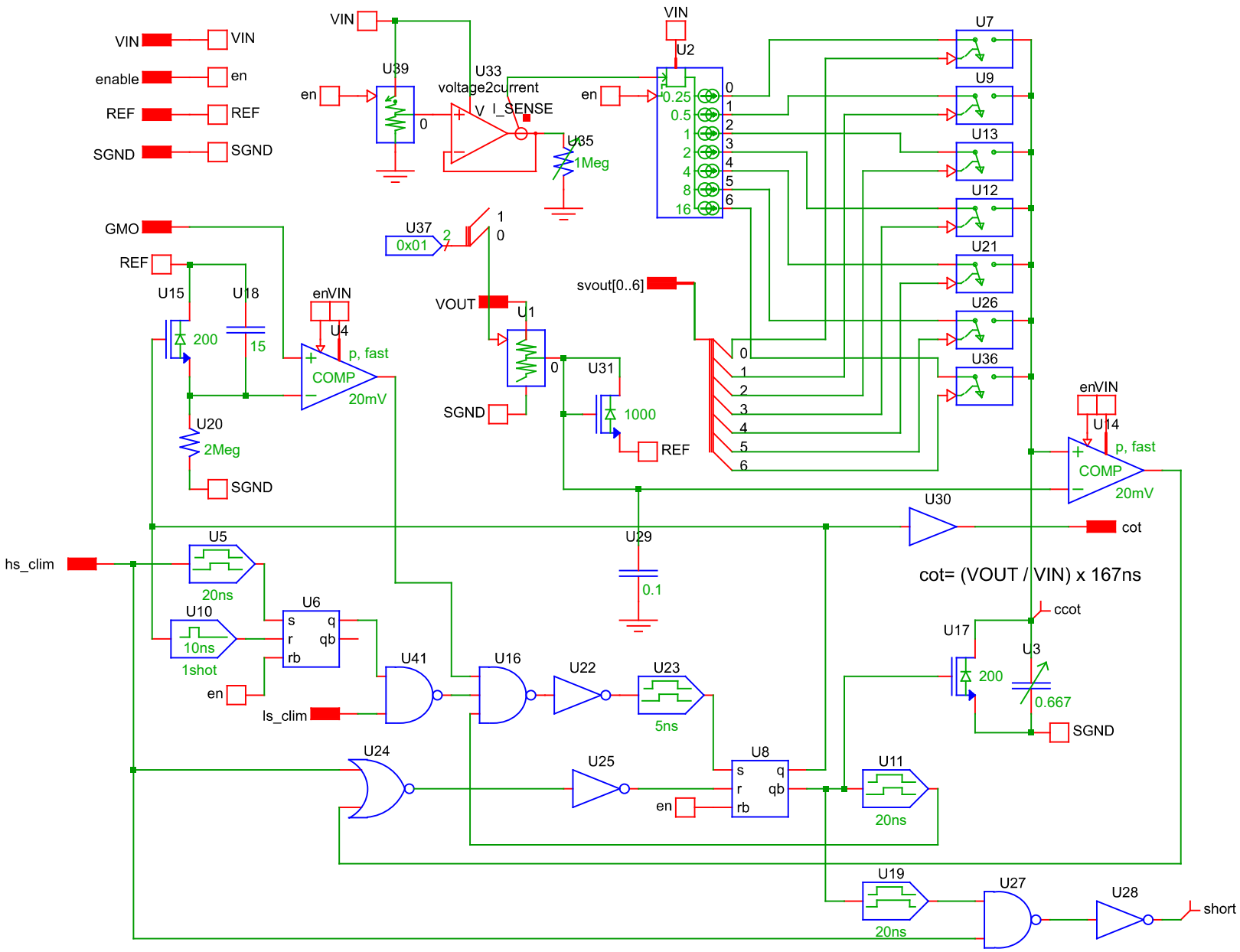

C:\Users\JAMES\Documents\CELERA\Beta\XC9281\cot.sxcmp - 10/28/2019