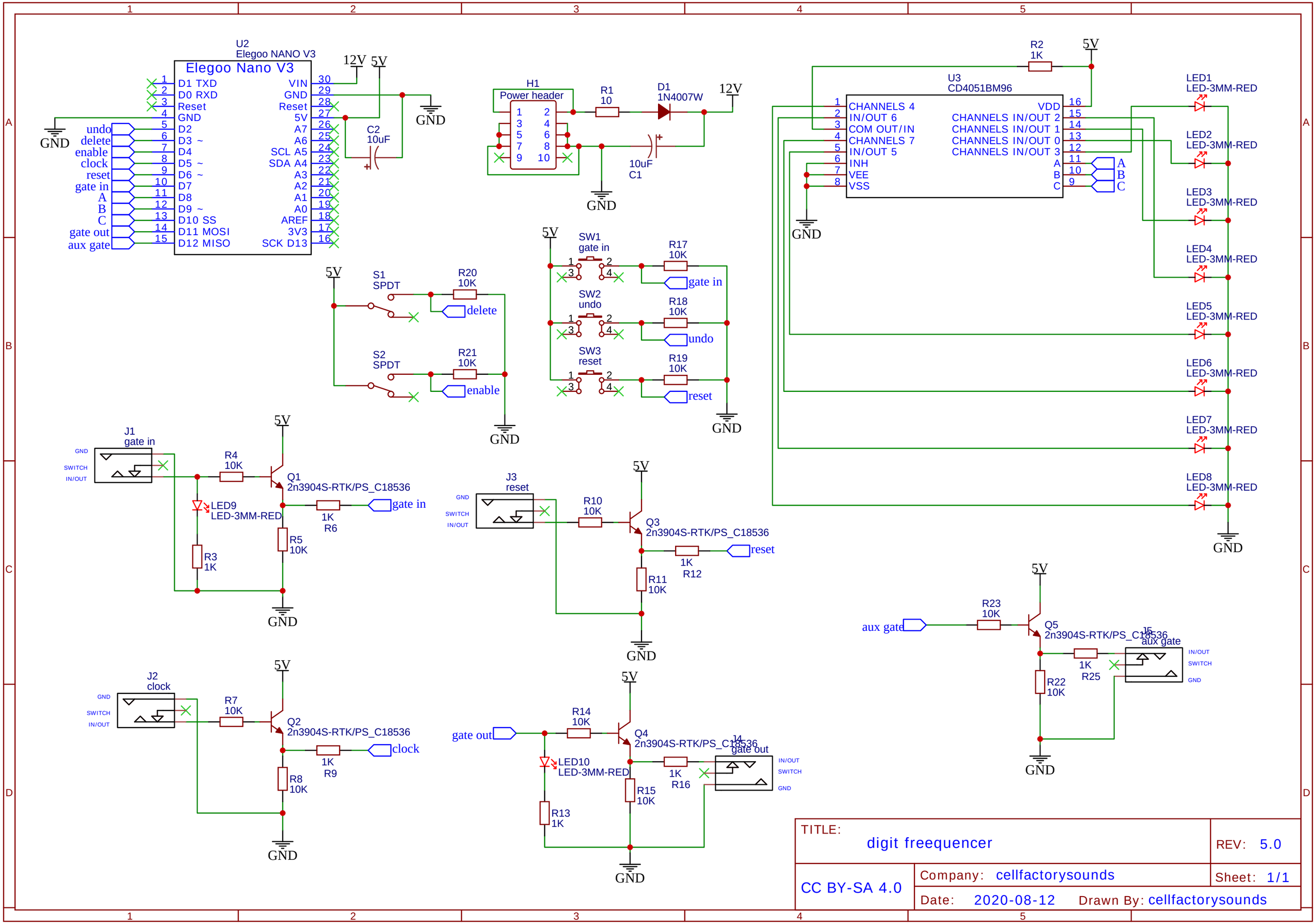

TITLE: digit freequencer

REV: 5.0

Company: cellfactorysounds

Sheet: 1/1

Date: 2020-08-12

Drawn By: cellfactorysounds

CC BY-SA 4.0