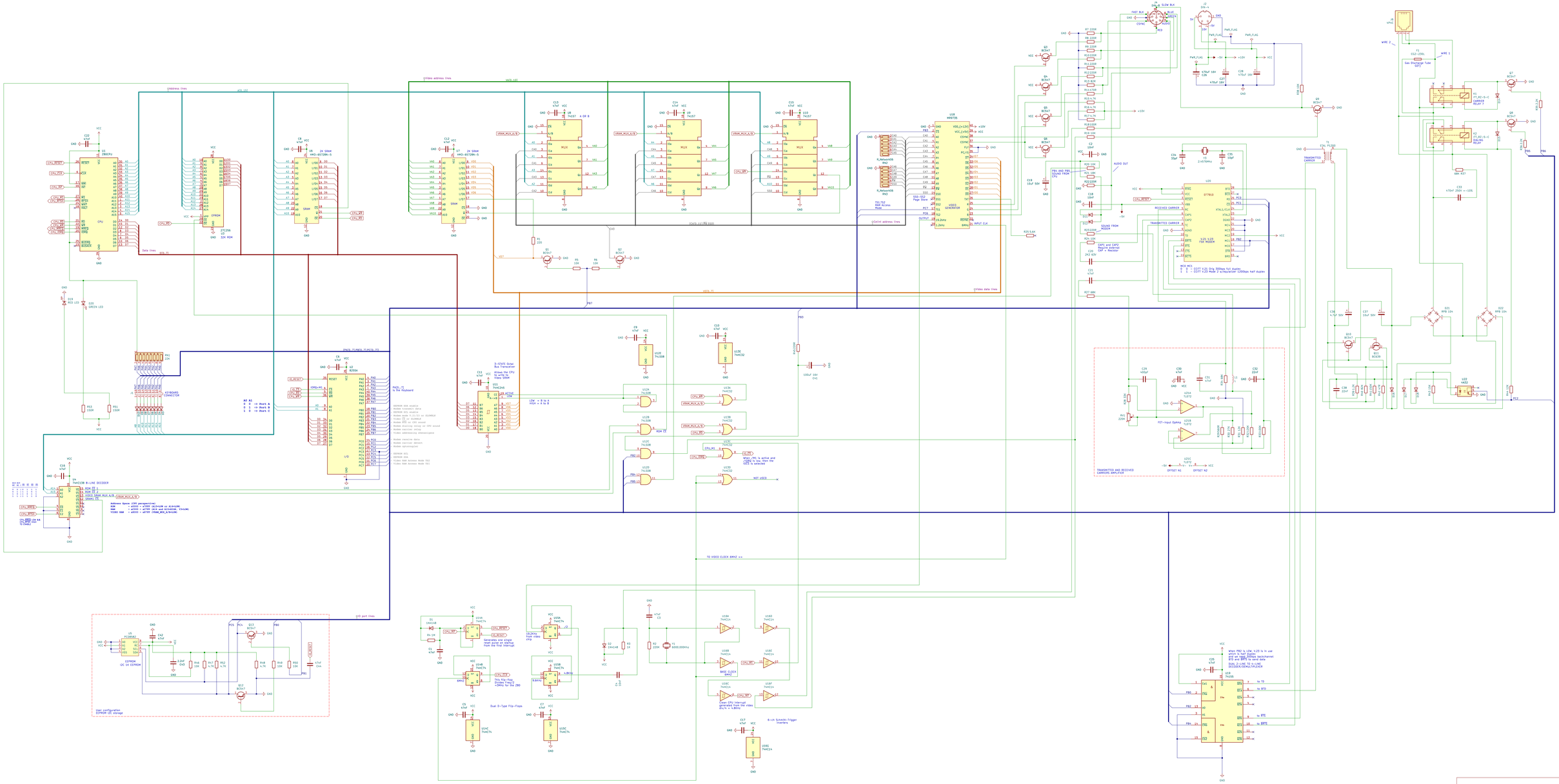
Address lines
Data lines
Video address lines
Video data lines
Video RAM Access Mode
Page Sync
Generates one single reset pulse on startup from the Fast interrupt
This flip-flop generates a signal at 4.9MHz for the 280
Dual D-Type Flip-Flops
6-ch Schmitt-trigger inverters
TO VIDEO CLOCK 6MHZ >>
GOT USER
User configuration EEPROM I2C storage
TRANSMITTED AND RECEIVED CARRIERS AMPLIFIER
Schematics by Ceiso Martino
Philips
Telematico
File: NMS3000 sheet.sch
Title: Telematico NMS-3000
Size: User Date:
KiCad E.D.A. 9.0.7
Rev:
Sheet 1/1