WSM

WORKSHOP MANUAL
TRACTOR

B1710,B2110,B2410,B2710

Kubota

KiSC issued 11, 2006 A

TO THE READER

This Workshop Manual has been prepared to provide servicing personnel with information on the mechanism, service and maintenance of KUBOTA Tractor B1710, B2110, B2410 and B2710. It is divided into two parts, “Mechanism” and “Servicing” for each section.

■ **Mechanism**

Information on the construction and function are included. This part should be understood before proceeding with troubleshooting, disassembling and servicing.

■ **Servicing**

Under the heading “General” section comes general precautions, check and maintenance and special tools. Other section, there are troubleshooting, servicing specification lists, checking and adjusting, disassembling and assembling, and servicing which cover procedures, precautions, factory specifications and allowable limits.

All information illustrations and specifications contained in this manual are based on the latest production information available at the time of publication.

The right is reserved to make changes in all information at any time without notice.

February 2001

© KUBOTA Corporation 2001

SAFETY FIRST

This symbol, the industry's "Safety Alert Symbol", is used throughout this manual and decals on the machine itself to warn of the possibility of personal injury. Read these instructions carefully.

It is essential that you read the instructions and safety regulations before you attempt to repair or use this unit.

DANGER : **Indicates an imminently hazardous situation which, if not avoided, will result in death or serious injury.**

WARNING : **Indicates a potentially hazardous situation which, if not avoided, could result in death or serious injury.**

CAUTION : **Indicates a potentially hazardous situation which, if not avoided, may result in minor or moderate injury.**

■ **IMPORTANT** : **Indicates that equipment or property damage could result if instructions are not followed.**

■ **NOTE** : **Gives helpful information.**

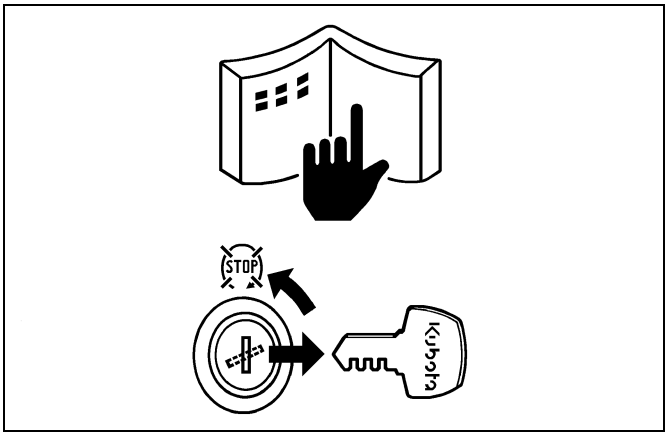

BEFORE SERVICING AND REPAIRING

- Read all instructions and safety instructions in this manual and on your machine safety decals.
- Clean the work area and machine.
- Park the machine on a firm and level ground, and set the parking brake.
- Lower the implement to the ground.
- Stop the engine, and remove the key.
- Disconnect the battery negative cable.
- Hang a "**DO NOT OPERATE**" tag in operator station.

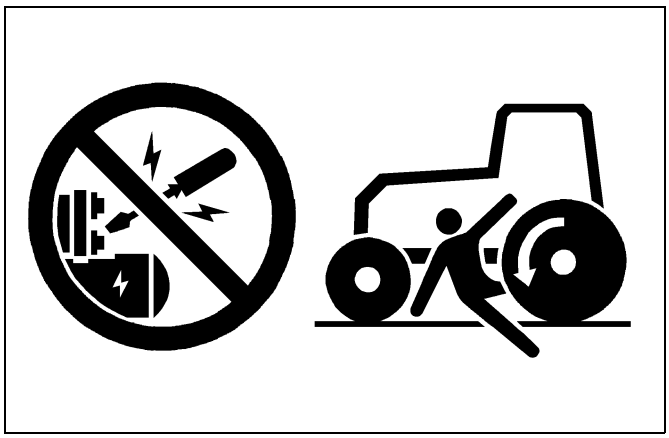

SAFETY STARTING

- Do not start the engine by shorting across starter terminals or bypassing the safety start switch.
- Do not alter or remove any part of machine safety system.
- Before starting the engine, make sure that all shift levers are in neutral positions or in disengaged positions.
- Never start the engine while standing on ground. Start the engine only from operator's seat.

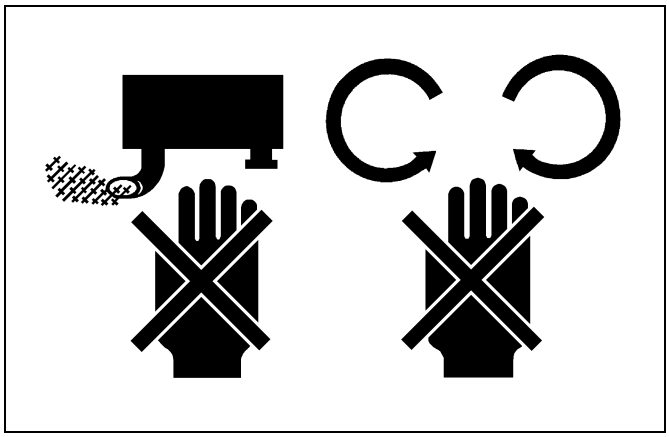

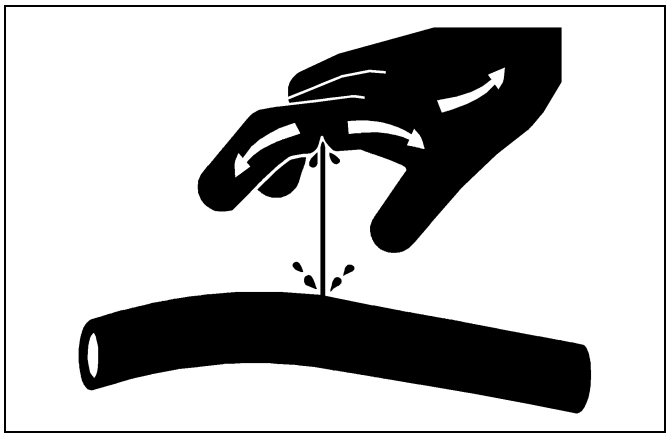

SAFETY WORKING

- Do not work on the machine while under the influence of alcohol, medication, or other substances or while fatigued.
- Wear close fitting clothing and safety equipment appropriate to the job.
- Use tools appropriate to the work. Markshift tools, parts, and procedures are not recommended.
- When servicing is performed together by two or more persons, take care to perform all work safely.
- Do not work under the machine that is supported solely by a jack. Always support the machine by safety stands.
- Do not touch the rotating or hot parts while the engine is running.
- Never remove the radiator cap while the engine is running, or immediately after stopping. Otherwise, hot water will spout out from radiator. Only remove radiator cap when cool enough to touch with bare hands. Slowly loosen the cap to first stop to relieve pressure before removing completely.
- Escaping fluid (fuel or hydraulic oil) under pressure can penetrate the skin causing serious injury. Relieve pressure before disconnecting hydraulic or fuel lines. Tighten all connections before applying pressure.

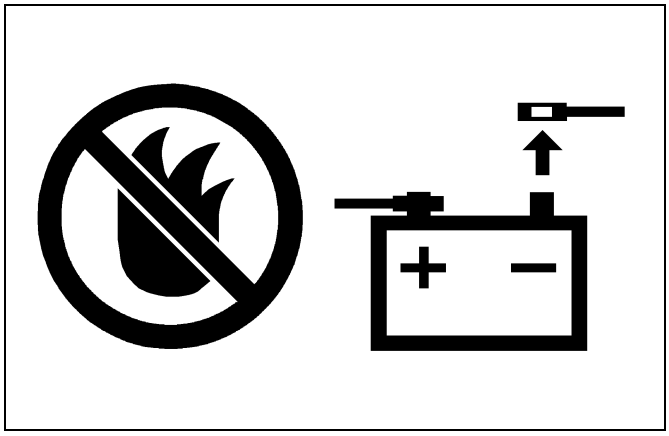

AVOID FIRES

- Fuel is extremely flammable and explosive under certain conditions. Do not smoke or allow flames or sparks in your working area.
- To avoid sparks from an accidental short circuit, always disconnect the battery negative cable first and connect it last.
- Battery gas can explode. Keep sparks and open flame away from the top of battery, especially when charging the battery.
- Mark sure that no fuel has been spilled on the engine.

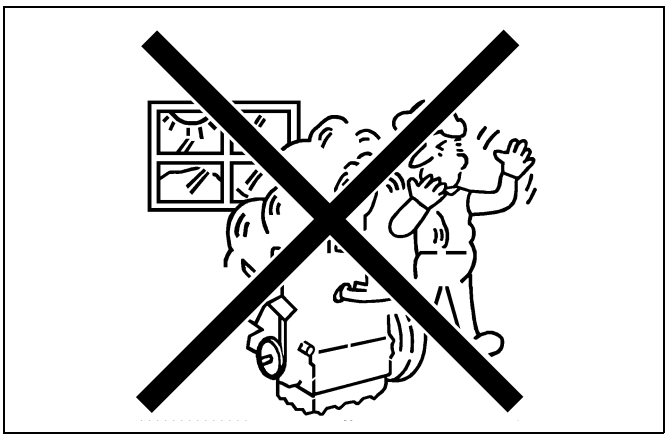

VENTILATE WORK AREA

- If the engine must be running to do some work, make sure the area is well ventilated. Never run the engine in a closed area. The exhaust gas contains poisonous carbon monoxide.

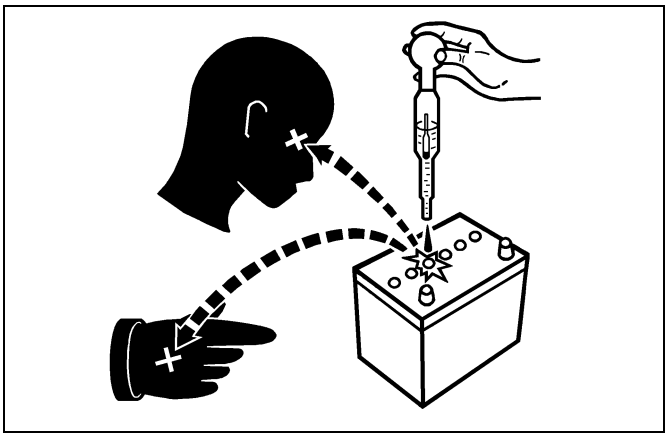

PREVENT ACID BURNS

- Sulfuric acid in battery electrolyte is poisonous. It is strong enough to burn skin, clothing and cause blindness if splashed into eyes. Keep electrolyte away from eyes, hands and clothing. If you spill electrolyte on yourself, flush with water, and get medical attention immediately.

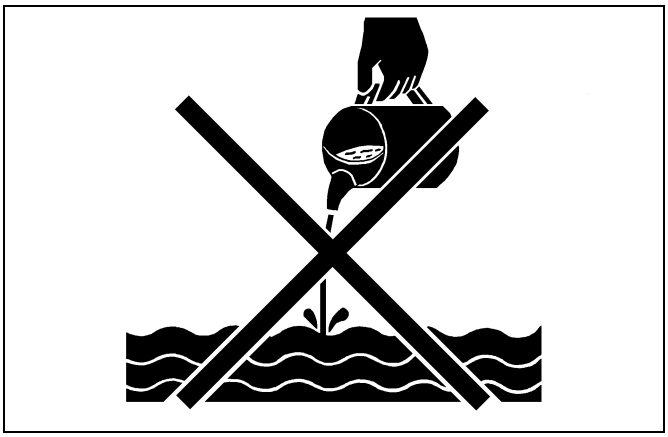

DISPOSE OF FLUIDS PROPERLY

- Do not pour fluids into the ground, down a drain, or into a stream, pond, or lake. Observe relevant environmental protection regulations when disposing of oil, fuel, coolant, electrolyte and other harmful waste.

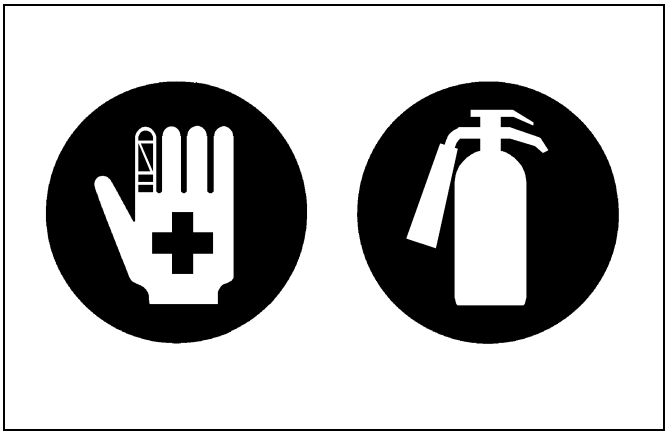

PREPARE FOR EMERGENCIES

- Keep a first aid kit and fire extinguisher handy at all times.
- Keep emergency numbers for doctors, ambulance service, hospital and fire department near your telephone.

SAFETY DECALS

The following safety decals are installed on the machine.
If a decal becomes damaged, illegible or is not on the machine, replace it. The decal part number is listed in the parts list.

(1) Part No. 6C142-5559-1

(2) Part No. TA040-4958-1
Do not touch hot
surface like muffler, etc.

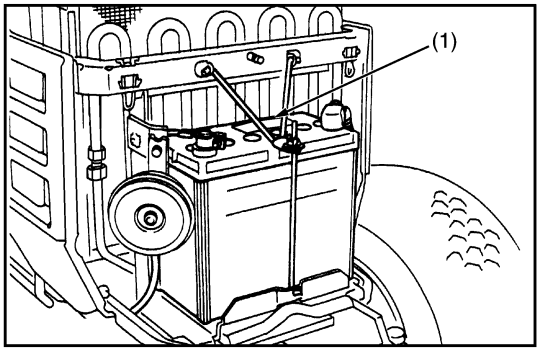

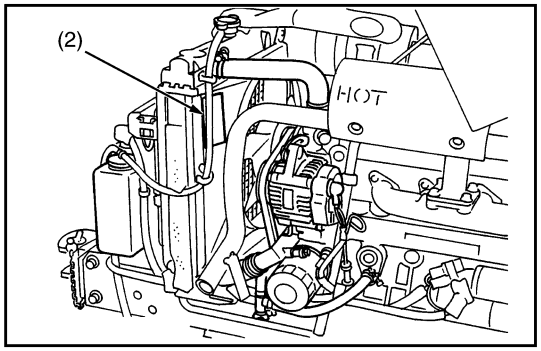

3TBAAADCP001A

(1) Part No. 6C150-4743-1 (HST type)

WARNING

BEFORE DISMOUNTING TRACTOR:
1. **ALWAYS SET PARKING BRAKE.** Leaving transmission in gear with the engine stopped will not prevent tractor from rolling.
2. **PARK ON LEVEL GROUND WHENEVER POSSIBLE.** If parking on a slope, position tractor across the slope.
3. **LOWER ALL IMPLEMENTS TO THE GROUND.**
4. **STOP THE ENGINE.**

(1) Part No. 6C140-4743-1 (Manual Transmission type)

WARNING

BEFORE DISMOUNTING TRACTOR:
1. **ALWAYS SET PARKING BRAKE.**
2. **PARK ON LEVEL GROUND WHENEVER POSSIBLE.** If parking on a slope, position tractor across the slope.
3. **LOWER ALL IMPLEMENTS TO THE GROUND.**
4. **STOP THE ENGINE.**

(2) Part No. TA040-4959-3

WARNING

TO AVOID PERSONAL INJURY.
1 Keep PTO shield in place at all times.
2 Do not operate the PTO at speeds faster than the speed recommended by the implement manufacturer.
3 For trailing PTO-driven implements. set drawbar at towing position. (see operator's manual)

(3) Part No. TA040-4965-2

DANGER

TO AVOID POSSIBLE INJURY OR DEATH FROM A MACHINE RUNAWAY.
1. Do not start engine by shorting across starter terminals or bypassing the safety start switch. Machine may start in gear and move if normal starting circuitry is bypassed.
2. Start engine only from operator's seat with transmission and PTO OFF. Never start engine while standing on the ground.

(4) Part No. 6C090-4965-1

DANGER

TO AVOID POSSIBLE INJURY OR DEATH FROM A MACHINE RUNAWAY.
1. Do not start engine by shorting across starter terminals or bypassing the safety start switch. Machine may start in gear and move if normal starting circuitry is bypassed.
2. Start engine only from operator's seat with transmission and PTO OFF. Never start engine while standing on the ground.

(5) Part No. TA040-4935-1

WARNING

TO AVOID PERSONAL INJURY:
1. Attach pulled or towed loads to the drawbar only.
2. Use the 3-point hitch only with equipment designed for 3-point hitch usage.

(6) Part No. 6C040-4741-2
No fire

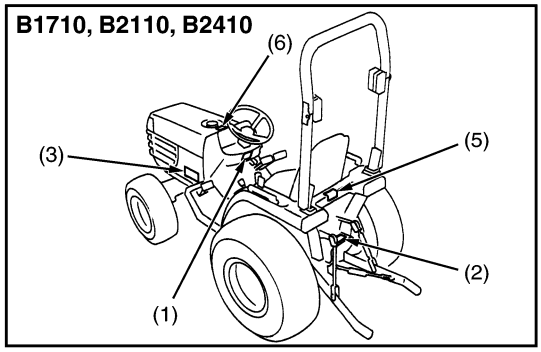

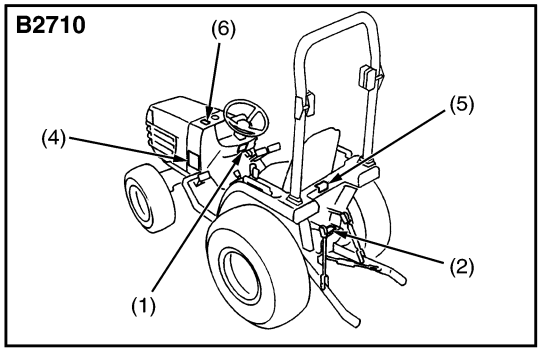

3TBAAADCP002A

(1) Part No. TA044-4932-1

⚠ WARNING

TO AVOID PERSONAL INJURY OR DEATH FROM ROLL-OVER:
1. Kubota recommends the use of a Roll-Over Protective Structures (ROPS) in almost all applications.
2. Remove the ROPS only when it substantially interferes with operation or itself presents a safety risk. (Examples include work in orchards and vineyards.) ALWAYS REINSTALL IT BEFORE USING THE TRACTOR IN OTHER APPLICATIONS.
3. For further details, consult your Operator's Manual or your local dealer.

(2) Part No. 32751-4958-1
Stay clear of engine fan and fanbelt.

(3) Part No. 6C040-4742-1

⚠ C A U T I O N

TO AVOID PERSONAL INJURY:
1. Read and understand the operator's manual before operation.
2. Before starting the engine, make sure that everyone is at a safe distance from the tractor and that the PTO is OFF.
3. Do not allow passengers on the tractor at any time.
4. Before allowing other people to use the tractor, have them read the operator's manual.
5. Check the tightness of all nuts and bolts regularly.
6. Keep all shields in place and stay away from all moving parts.
7. Lock the two brake pedals together before driving on the road.
8. Slow down for turns, or rough roads, or when applying individual brakes.
9. On public roads use SMV emblem and hazard lights, if required by local traffic and safety regulations.
10. Pull only from the drawbar.
11. Before dismounting lower the implement, set the parking brake, stop the engine and remove the key.

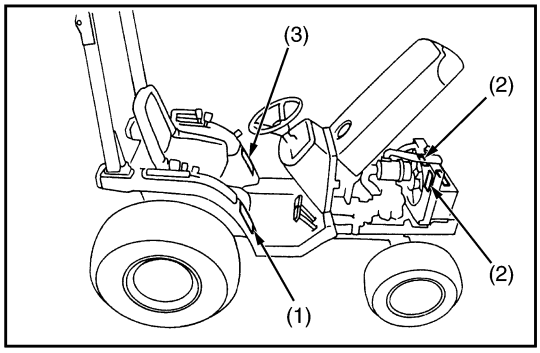

CARE OF DANGER, WARNING AND CAUTION LABELS
1. Keep danger, warning and caution labels clean and free from obstructing material.
2. Clean danger, warning and caution labels with soap and water, dry with a soft cloth.
3. Replace damaged or missing danger, warning and caution labels with new labels from your local KUBOTA Distributor.
4. If a component with danger, warning or caution label (s) affixed is replaced with new part, make sure new label (s) is (are) attached in the same location (s) as the replaced component.
5. Mount new danger, warning and caution labels by applying on a clean dry surface and pressing any bubbles to outside edge.

3TBAAADCP003A

SPECIFICATIONS

Model			B1710D	B2110D	B2110DB	B2110HDB
PTO power			10.5 kW (14.3 PS)*	12.7 kW (17.3 PS)*		12.0 kW (16.3 PS)*
Engine	Maker		KUBOTA			
	Model		D905-D18	D1005-D18		
	Type		Indirect Injection. Vertical, water-cooled, 4-cycle diesel			
	Number of cylinder		3			
	Bore and stroke		72 × 73.6 mm (2.83 × 2.90 in.)	76 × 73.6 mm (2.99 × 2.90 in.).		
	Total displacement		898 cm^3 (54.8 cu.in.)	1001 cm^3 (61.1 cu.in.)		
	Engine power (ECE-R24)		12.1 kW (16.5 PS)	14.0 kW (19.0 PS)		
	Engine power (SAE gross)		13.4 kW (18.0 HP)	15.7 kW (21.0 HP)		
	Rated revolution		43.3 r/s (2600 rpm)			
	Maximum torque		51 N·m (37.6 ft-lbs)	59 N·m (43.5 ft-lbs)		
	Battery		12 V, RC : 79 min, CCA : 433 A			
	Starting system		Electric starting with cell starter 12 V, 1.4 kW			
	Lubricating system		Forced lubrication by trochoidal pump			
	Cooling system		Pressurized radiator, forced circulation with water pump			
	Fuel		Diesel fuel No. 2-D [above –10 °C (14 °F)], Diesel fuel No. 1 [below –10 °C (14 °F]			
Capacities	Fuel tank		24 L (6.3 U.S.gals., 5.3 Imp.gals.)			
	Engine crankcase (with filter)		3.0 L (3.2 U.S.qts., 2.6 Imp.qts.)			
	Engine coolant		3.8 L (4.0 U.S.qts., 3.3 Imp.qts.)			
	Transmission case		11.5 L (3.04 U.S.gals., 2.53 Imp.gals.)			12.5 L (3.30 U.S.gals., 2.75 Imp.gals.)
	Front axle case		3.7 L (3.9 U.S.qts., 3.3 Imp.qts.)		4.5 L (4.8 U.S.qts., 4.0 Imp.qts.)	
Tires	Front		6-12B	6-12		
	Rear		8-16	9.5-16		
Dimensions	Overall length (with 3P)		2378 mm (93.6 in.)	2405 mm (94.7 in.)		
	Overall width (min. tread)		990 mm (39.0 in.)	1040 mm (40.9 in.)		
	Overall height (with ROPS)		2246 mm (88.4 in.)	2268 mm (89.3 in.)		
	Overall height (top of steering wheel)		1283 mm (50.5 in.)	1305 mm (51.4 in.)		
	Wheel base		1500 mm (59.0 in.)			
	Minimum ground clearance		263 mm (10.4 in.)	285 mm (11.2 in.)		
	Tread	Front	830 mm (32.7 in.)			
		Rear	740 to 910 mm (29.1 to 35.8 in.)	795 to 1015 mm (31.3 to 40.0 in.)		
Weight (with ROPS)			658 kg (1451 lbs)	668 kg (1473 lbs)	678 kg (1495 lbs)	694 kg (1530 lbs)
Minimum turning radius		4WD with brake	2.1 m (6.9 feet)			
		Bi-speed turn without brake	–	2.1 m (6.9 feet)		
Clutch			Dry single plate			
Travelling system	Steering		Integral type power steering			
	Transmission		Gear shift, 6 forward and 2 reverse			HST with 2 speeds range gear shift
	Brake		Wet disk type			
	Differential		Bevel gears			
Hydraulic system	Hydraulic control system		Position control			
	Pump capacity		3P : 16.6 L/min. (4.4 U.S.gals./min., 3.7 Imp.gals./min.) Power steering : 9.8 L/min. (2.6 U.S.gals./min., 2.2 Imp.gals./min.)			
	Three point hitch		SAE Category I			
	Max. lift force	At lift points	750 kg (1655 lbs)			
		24 in. behind lift points	590 kg (1300 lbs)			
PTO system	Rear	PTO shaft	SAE 1-3/8, 6 splines			
		Revolution	1 speed (540 rpm at 2600 engine rpm)			
	Mid.	PTO shaft	USA No. 5 (KUBOTA 10-tooth) involute spline			
		Revolution	1 speed (2500 rpm at 2578 engine rpm)			

Note : * Manufacture's estimate
The company reserves the right to change the specifications without notice.

W10281170

Model			B2410D	B2410DB	B2410HDB
PTO power			14.3 kW (19.4 PS)*	13.4 kW (18.2 PS)*	
Engine	Maker		KUBOTA		
	Model		D1105-D18		
	Type		Indirect Injection. Vertical, water-cooled, 4-cycle diesel		
	Number of cylinder		3		
	Bore and stroke		78 × 78.4 mm (3.07 × 3.09 in.).		
	Total displacement		1123 cm^3 (68.5 cu.in.)		
	Engine power (ECE-R24)		15.8 kW (21.5 PS)		
	Engine power (SAE gross)		17.9 kW (24.0 HP)		
	Rated revolution		43.3 r/s (2600 rpm)		
	Maximum torque		67 N·m (49.4 ft-lbs)		
	Battery		12 V, RC : 79 min, CCA : 433 A		
	Starting system		Electric starting with cell starter 12 V, 1.4 kW		
	Lubricating system		Forced lubrication by trochoidal pump		
	Cooling system		Pressurized radiator, forced circulation with water pump		
	Fuel		Diesel fuel No. 2-D [above –10 °C (14 °F)], Diesel fuel No. 1 [below –10 °C (14 °F]		
Capacities	Fuel tank		24 L (6.3 U.S.gals., 5.3 Imp.gals.)		
	Engine crankcase (with filter)		3.0 L (3.2 U.S.qts., 2.6 Imp.qts.)		
	Engine coolant		3.8 L (4.0 U.S.qts., 3.3 Imp.qts.)		
	Transmission case		11.5 L (3.04 U.S.gals., 2.53 Imp.gals.)		12.5 L (3.30 U.S.gals., 2.75 Imp.gals.)
	Front axle case		3.7 L (3.9 U.S.qts., 3.3 Imp.qts.)	4.5 L (4.8 U.S.qts., 4.0 Imp.qts.)	
Tires	Front		6.00-12		
	Rear		9.5-18		
Dimensions	Overall length (with 3P)		2430 mm (95.7 in.)		
	Overall width (min. tread)		1050 mm (41.3 in.)		
	Overall height (with ROPS)		2298 mm (90.5 in.)		
	Overall height (top of steering wheel)		1335 mm (52.6 in.)		
	Wheel base		1500 mm (59.0 in.)		
	Minimum ground clearance		315 mm (12.4 in.)		
	Tread	Front	830 mm (32.6 in.)		
		Rear	810 to 1035 mm (31.9 to 40.7 in.)		
Weight (with ROPS)			692 kg (1526 lbs)	702 kg (1548 lbs)	718 kg (1583 lbs)
Minimum turning radius		4WD with brake	2.1 m (6.9 feet)		
		Bi-speed turn without brake	–	2.1 m (6.9 feet)	
Clutch			Dry single plate		
Travelling system	Steering		Integral type power steering		
	Transmission		Gear shift, 6 forward and 2 reverse		HST with 2 speeds range gear shift
	Brake		Wet disk type		
	Differential		Bevel gears		
Hydraulic system	Hydraulic control system		Position control		
	Pump capacity		3P : 16.6 L/min. (4.4 U.S.gals./min., 3.7 Imp.gals./min.) Power steering : 9.8 L/min. (2.6 U.S.gals./min., 2.2 Imp.gals./min.)		
	Three point hitch		SAE Category I		
	Max. lift force	At lift points	750 kg (1655 lbs)		
		24 in. behind lift points	590 kg (1300 lbs)		
PTO system	Rear	PTO shaft	SAE 1-3/8, 6 splines		
		Revolution	1 speed (540 rpm at 2600 engine rpm)		
	Mid.	PTO shaft	USA No. 5 (KUBOTA 10-tooth) involute spline		
		Revolution	1 speed (2500 rpm at 2578 engine rpm)		

Note : * Manufacture's estimate
The company reserves the right to change the specifications without notice.

W10357020

Model			B2710HDB
PTO power			15.0 kW (20.4 HP)*
Engine	Maker		KUBOTA
	Model		V1305-D18
	Type		Indirect Injection. Vertical, water-cooled, 4-cycle diesel
	Number of cylinder		4
	Bore and stroke		76 × 73.6 mm (2.99 × 2.90 in.).
	Total displacement		1335 cm^3 (81.5 cu.in.)
	Engine power (ECE-R24)		18.2 kW (24.7 PS)
	Engine power (SAE gross)		20.1 kW (27.0 HP)
	Rated revolution		43.3 r/s (2600 rpm)
	Maximum torque		79 N·m (59 ft-lbs)
	Battery		12 V, RC : 79 min, CCA : 433 A
	Starting system		Electric starting with cell starter 12 V, 1.4 kW
	Lubricating system		Forced lubrication by trochoidal pump
	Cooling system		Pressurized radiator, forced circulation with water pump
	Fuel		Diesel fuel No. 2-D [above –10 °C (14 °F)], Diesel fuel No. 1 [below –10 °C (14 °F]
Capacities	Fuel tank		26 L (6.9 U.S.gals., 5.7 Imp.gals.)
	Engine crankcase (with filter)		4.1 L (4.3 U.S.qts., 3.6 Imp.qts.)
	Engine coolant		4.5 L (4.8 U.S.qts., 4.0 Imp.qts.)
	Transmission case		15.5 L (4.10 U.S.gals., 3.41 Imp.gals.)
	Front axle case		5.3 L (5.6 U.S.qts., 4.7 Imp.qts.)
Tires	Front		7-12 (180 / 85D12)
	Rear		12.4 -16
Dimensions	Overall length (with 3P)		2625 mm (103.3 in.)
	Overall width (min. tread)		1365 mm (53.7 in.)
	Overall height (with ROPS)		2334 mm (91.9 in.)
	Overall height (top of steering wheel)		1375 mm (54.1 in.)
	Wheel base		1666 mm (65.6 in.)
	Minimum ground clearance		308 mm (12.1 in.)
	Tread	Front	935 mm (36.8 in.)
		Rear	1050 mm (41.3 in.)
Weight (with ROPS)			842 kg (1857 lbs)
Minimum turning radius		4WD with brake	2.1 m (6.9 feet)
		Bi-speed turn without brake	2.1 m (6.9 feet)
Clutch			Dry single plate
Travelling system	Steering		Integral type power steering
	Transmission		Hydrostatic transmission with 3 speeds range gear shift
	Brake		Wet disk type
	Differential		Bevel gears
Hydraulic system	Hydraulic control system		Position control
	Pump capacity		3P : 24.4 L/min. (6.4 U.S.gals./min., 5.4 Imp.gals./min.) Power steering : 11.7 L/min. (3.1 U.S.gals./min., 2.6 Imp.gals./min.)
	Three point hitch		SAE Category I
	Max. lift force	At lift points	830 kg (1830 lbs)
		24 in. behind lift points	650 kg (1433 lbs)
PTO system	Rear	PTO shaft	SAE 1-3/8, 6 splines
		Revolution	1 speed (540 rpm at 2600 engine rpm)
	Mid.	PTO shaft	USA No. 5 (KUBOTA 10-tooth) involute spline
		Revolution	1 speed (2500 rpm at 2578 engine rpm)

Note : * Manufacture's estimate
The company reserves the right to change the specifications without notice.

W10368160

TRAVELLING SPEEDS

[Manual Transmission Model]

Model			B1710	B2110	B2410	B1710, B2110	B2410
Tire size (Rear)			8-16	9.5-16	9.5-18	31 × 13.5-15	315/75D-15
	Range gear shift lever	Main gear shift lever	km/h (mile/h)	km/h (mile/h)	km/h (mile/h)	km/h (mile/h)	km/h (mile/h)
Forward	Low	1	0.9 (0.6)	1.0 (0.6)	1.1 (0.7)	0.9 (0.6)	1.0 (0.6)
		2	1.7 (1.1)	1.8 (1.1)	1.9 (1.2)	1.6 (2.0)	1.8 (1.1)
		3	3.0 (1.9)	3.2 (2.0)	3.4 (2.1)	2.9 (1.8)	3.2 (2.0)
	High	1	5.3 (3.3)	5.6 (3.5)	6.0 (3.7)	5.2 (3.2)	5.6 (3.5)
		2	9.3 (5.8)	9.8 (6.1)	10.5 (6.5)	9.1 (5.7)	9.9 (6.2)
		3	16.8 (10.4)	17.8 (11.1)	19.1 (11.9)	16.5 (10.3)	17.9 (11.1)
	Max. Speed (at 2750 engine rpm)	3	17.8 (11.1)	18.8 (11.7)	20.2 (12.6)	17.4 (10.8)	19.0 (11.8)
Reverse	Low	R	1.2 (0.7)	1.3 (0.8)	1.3 (0.8)	1.2 (0.7)	1.3 (0.8)
	High	R	6.6 (4.1)	7.0 (4.4)	7.5 (4.7)	6.4 (4.0)	7.0 (4.4)
	Max. Speed (at 2750 engine rpm)	R	7.0 (4.4)	7.4 (4.6)	7.9 (4.9)	6.8 (4.2)	7.4 (4.6)

W10350650

[HST Model]

Model		B2110	B2410	B2110	B2410	B2710	B2710
Tire size (Rear)		9.5-16	9.5-18	31 × 13.5-15	315/75D-15	12.4-16	13.6-16
	Range gear shift lever	km/h (mile/h)	km/h (mile/h)	km/h (mile/h)	km/h (mile/h)	km/h (mile/h)	km/h (mile/h)
Forward	Low	0 to 7.3 (0 to 4.5)	0 to 7.8 (0 to 4.8)	0 to 6.8 (0 to 4.2)	0 to 7.4 (0 to 4.6)	0 to 4.9 (0 to 3.0)	0 to 5.0 (0 to 3.1)
	Middle	–	–	–	–	0 to 8.4 (0 to 5.2)	0 to 8.6 (0 to 5.3)
	High	0 to 20.9 (0 to 13.0)	0 to 22.4 (0 to 13.9)	0 to 19.3 (0 to 12.0)	0 to 21.1 (0 to 13.1)	0 to 23.1 (0 to 14.4)	0 to 23.7 (0 to 14.7)
	Max. Speed (at 2750 engine rpm)	22.1 (13.7)	23.7 (14.7)	20.4 (12.7)	22.3 (13.9)	24.4 (15.2)	25.1 (15.6)
Reverse	Low	0 to 5.9 (0 to 3.7)	0 to 6.3 (0 to 3.9)	0 to 5.4 (0 to 3.4)	0 to 5.9 (0 to 3.7)	0 to 3.9 (0 to 2.4)	0 to 4.0 (0 to 2.5)
	Middle	–	–	–	–	0 to 6.7 (0 to 4.2)	0 to 6.9 (0 to 4.3)
	High	0 to 16.7 (0 to 10.4)	0 to 18.0 (0 to 11.2)	0 to 15.4 (0 to 9.6)	0 to 16.9 (0 to 10.5)	0 to 18.4 (0 to 11.4)	0 to 19.0 (0 to 11.8)
	Max. Speed (at 2750 engine rpm)	17.7 (11.0)	19.0 (11.8)	16.3 (10.1)	17.9 (11.1)	19.5 (12.1)	20.1 (12.5)

The company reserves the right to change the specifications without notice.

W10411340

DIMENSIONS

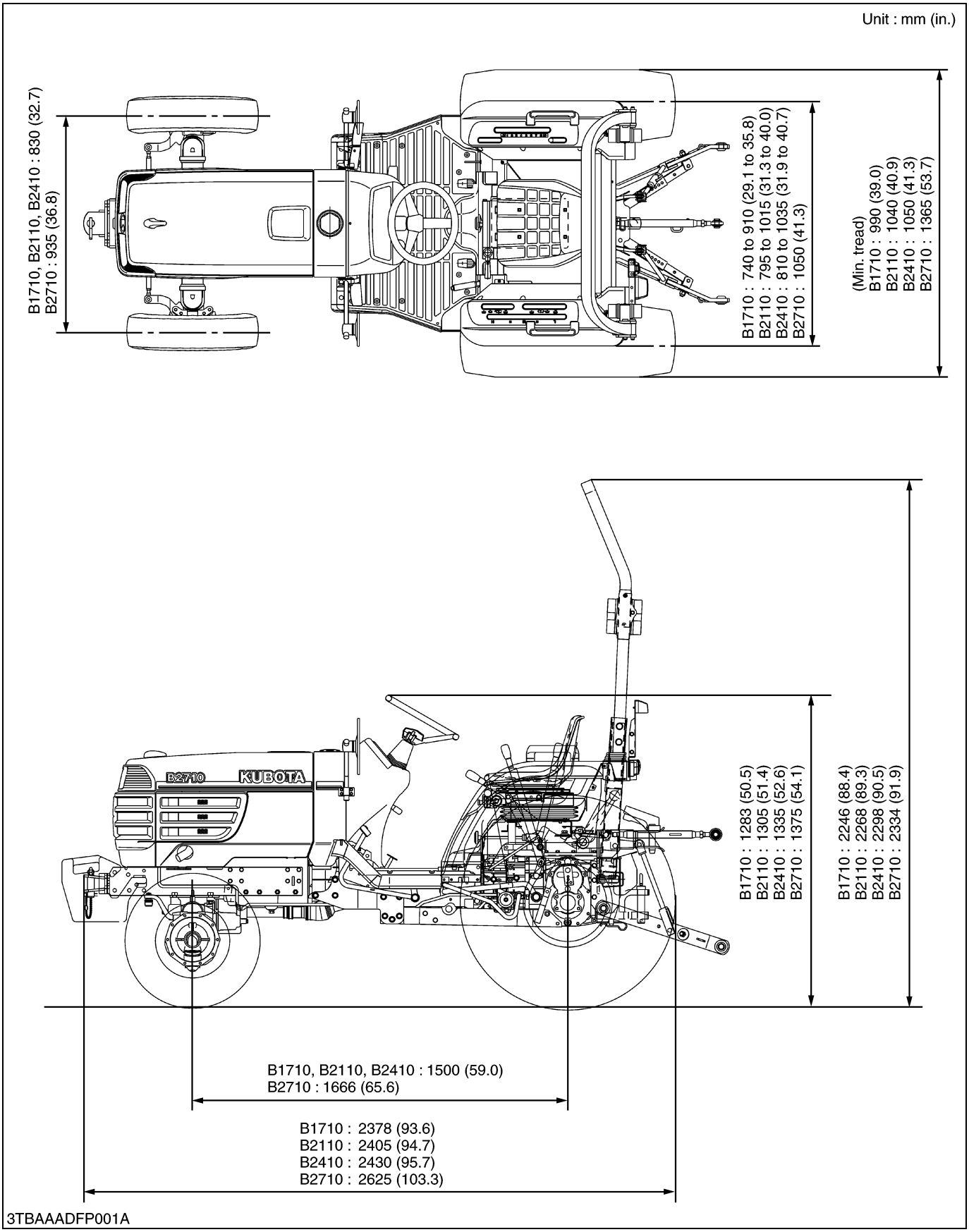
Unit : mm (in.)
B1710, B2110, B2410 : 830 (32.7)
B2710 : 935 (36.8)
B1710 : 740 to 910 (29.1 to 35.8)
B2110 : 795 to 1015 (31.3 to 40.0)
B2410 : 810 to 1035 (31.9 to 40.7)
B2710 : 1050 (41.3)
(Min. tread)
B1710 : 990 (39.0)
B2110 : 1040 (40.9)
B2410 : 1050 (41.3)
B2710 : 1365 (53.7)
B2710
KUBOTA
B1710 : 1283 (50.5)
B2110 : 1305 (51.4)
B2410 : 1335 (52.6)
B2710 : 1375 (54.1)
B1710 : 2246 (88.4)
B2110 : 2268 (89.3)
B2410 : 2298 (90.5)
B2710 : 2334 (91.9)
B1710, B2110, B2410 : 1500 (59.0)
B2710 : 1666 (65.6)
B1710 : 2378 (93.6)
B2110 : 2405 (94.7)
B2410 : 2430 (95.7)
B2710 : 2625 (103.3)
3TBAAADFP001A

G GENERAL

GENERAL

CONTENTS

1. FEATURES G-1
2. TRACTOR IDENTIFICATION G-2
3. GENERAL PRECAUTIONS G-3
4. HANDLING PRECAUTIONS FOR ELECTRICAL PARTS AND WIRING .. G-4
   [1] WIRING G-4
   [2] BATTERY G-6
   [3] FUSE G-6
   [4] CONNECTOR G-6
   [5] HANDLING OF CIRCUIT TESTER G-7
5. LUBRICANTS FUEL AND COOLANT G-8
6. TIGHTENING TORQUES G-9
   [1] GENERAL USE SCREWS, BOLTS AND NUTS G-9
   [2] STUD BOLTS G-9
7. MAINTENANCE G-10
8. CHECK AND MAINTENANCE G-11
   [1] DAILY CHECK G-11
   [2] CHECK POINTS OF INITIAL 50 HOURS G-12
   [3] CHECK POINTS OF EVERY 50 HOURS G-15
   [4] CHECK POINTS OF EVERY 100 HOURS G-17
   [5] CHECK POINTS OF EVERY 200 HOURS G-23
   [6] CHECK POINTS OF EVERY 300 HOURS G-24
   [7] CHECK POINTS OF EVERY 400 HOURS G-25
   [8] CHECK POINTS OF EVERY 800 HOURS G-26
   [9] CHECK POINTS OF EVERY 1 YEAR G-26
   [10] CHECK POINTS OF EVERY 2 YEARS G-26
   [11] OTHERS G-29
9. SPECIAL TOOLS G-31
   [1] SPECIAL TOOLS FOR ENGINE G-31
   [2] SPECIAL TOOLS FOR TRACTOR G-36
10. TIRES G-40
   [1] TIRE PRESSURE G-40
   [2] TREAD G-41
      (1) Front Wheels G-41
      (2) Rear Tread G-42
   [3] TIRE LIQUID INJECTION G-44

1. FEATURES

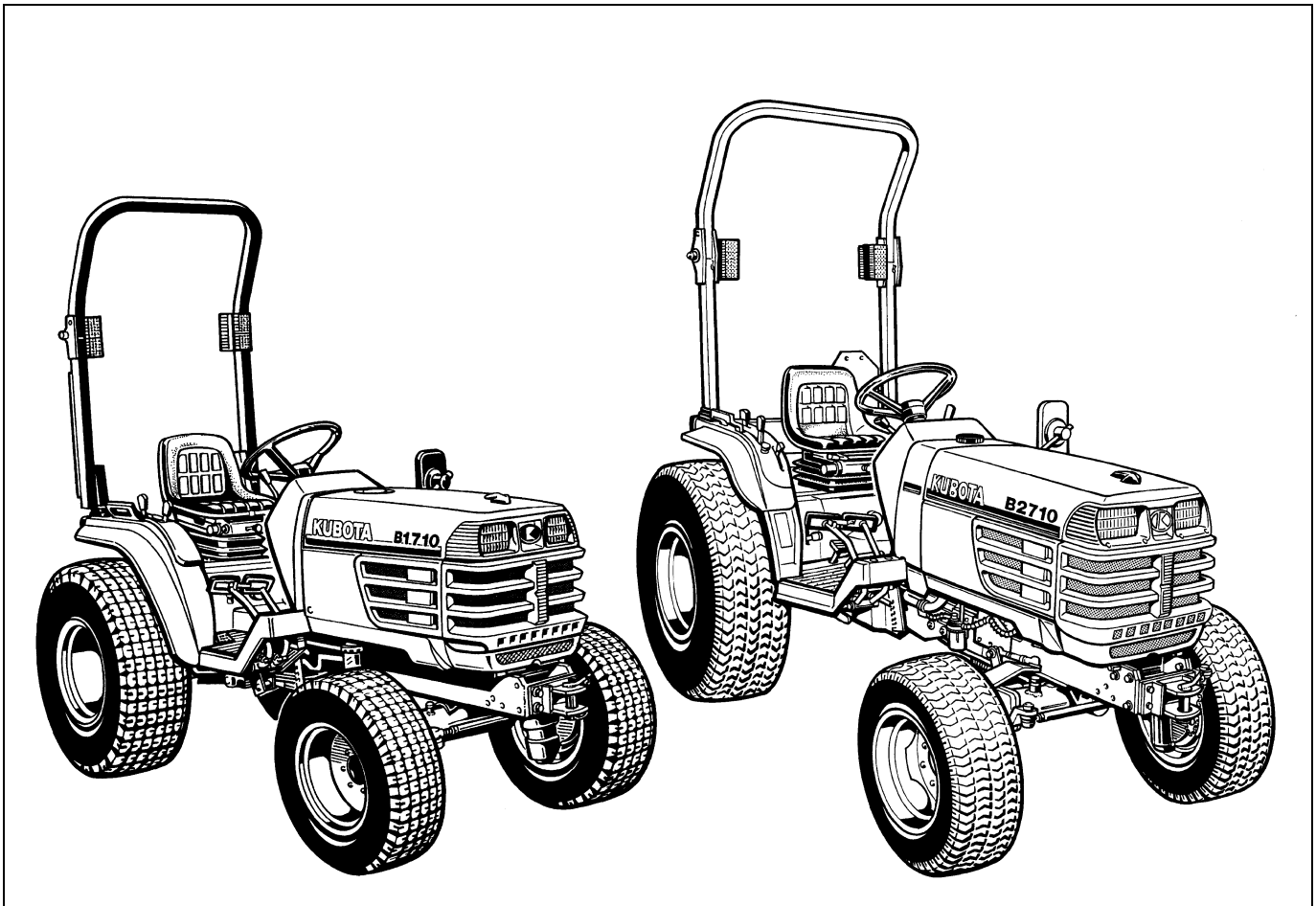

3TBAAAD0P001A

1. Integral Power Steering
2. E-TVCS (Three Vortex Combustion System) Diesel Engine
3. Engine Key Shut-Off System
4. Hydrostatic Transmission (HST)
5. 3 Range of Speed (B2710 only)
6. Bi-speed Turn (Except B1710)
7. Wet Disc Brake
8. Standard mid-PTO
9. Simultaneous Mounting of Both the Mid. Mount Mower and Front Loader
10. Combination Panel of Easy Checker
11. Large Hydraulic Pump
12. Position Control Valve
13. Hydraulic Block Type Outlet
14. Foldable ROPS
15. Auxiliary Hydraulic Control Valve (Remote Valve)

2. TRACTOR IDENTIFICATION

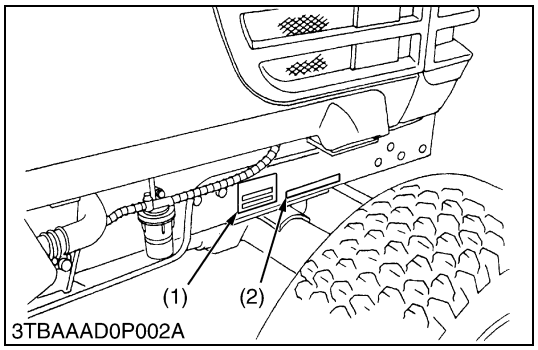

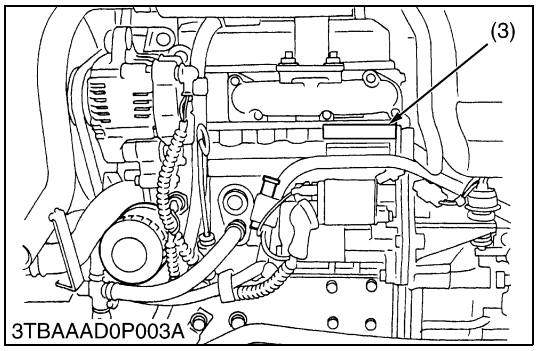

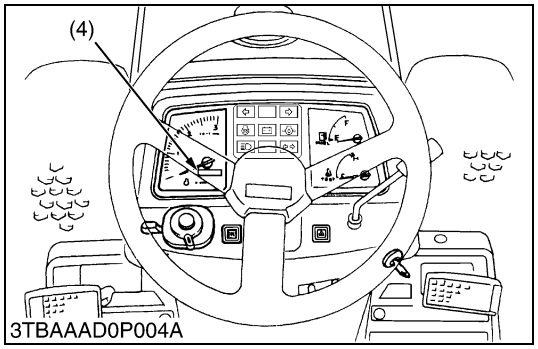

When contacting your local KUBOTA distributor, always specify engine serial number, tractor serial number and hour meter reading.

(1) Tractor Identification Plate
(2) Tractor Serial Number
(3) Engine Serial Number
(4) Hour Meter

W10108050

3. GENERAL PRECAUTIONS

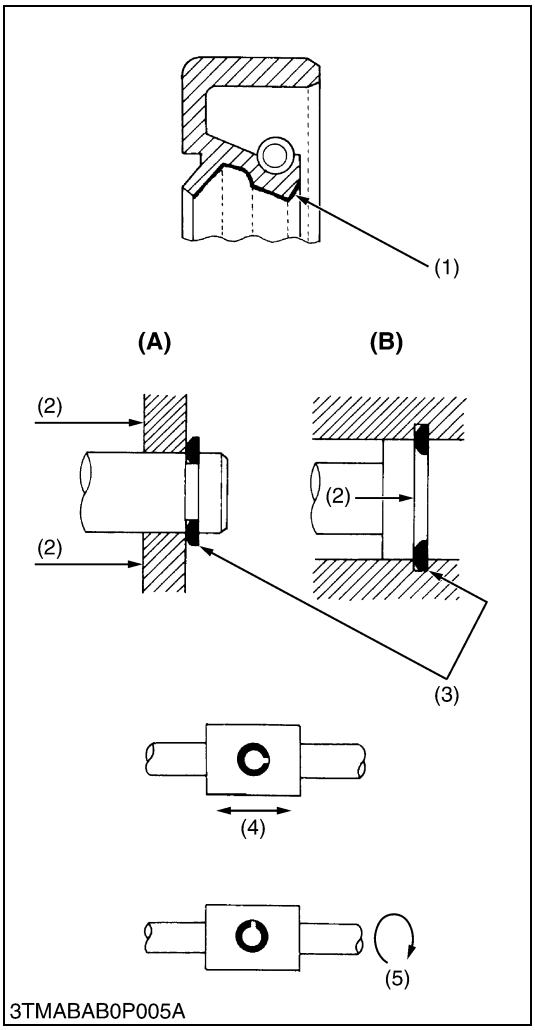

- During disassembly, carefully arrange removed parts in a clean area to prevent confusion later. Screws, bolts and nuts should be installed in their original position to prevent reassembly errors.
- When special tools are required, use KUBOTA genuine special tools. Special tools which are not frequently used should be made according to the drawings provided.
- Before disassembling or servicing electrical wires, always disconnect the ground cable from the battery first.
- Remove oil and dirt from parts before measuring.
- Use only KUBOTA genuine parts for parts replacement to maintain machine performance and to assure safety.
- Gaskets and O-rings must be replaced during reassembly. Apply grease to new O-rings or oil seals before assembling. See the figure left side.
- When reassembling external snap rings or internal snap rings, they must be positioned so that sharp edge faces against the direction from which a force is applied. See the figure left side.
- When inserting spring pins, their splits must face the direction from which a force is applied. See the figure left side.
- To prevent damage to the hydraulic system, use only specified fluid or equivalent.

(1) Grease
(2) Force
(3) Sharp Edge
(4) Axial Force
(5) Rotating Movement

(A) External Snap Ring
(B) Internal Snap Ring

W10109040

4. HANDLING PRECAUTIONS FOR ELECTRICAL PARTS AND WIRING

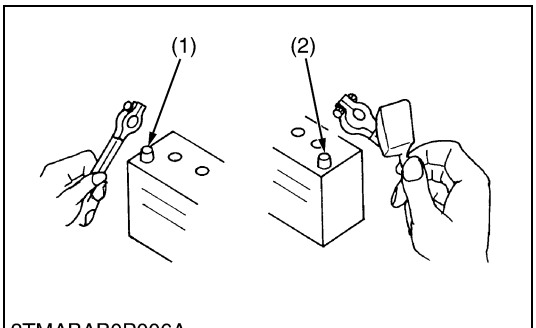

3TMABAB0P006A

To ensure safety and prevent damage to the machine and surrounding equipment, heed the following precautions in handling electrical parts and wiring.

■ **IMPORTANT**

- **Check electrical wiring for damage and loosened connection every year. To this end, educate the customer to do his or her own check and at the same time recommend the dealer to perform periodic check for a fee.**
- **Do not attempt to modify or remodel any electrical parts and wiring.**
- **When removing the battery cables, disconnect the negative cable first. When installing the battery cables, connect the positive cable first.**

(1) Negative Terminal (2) Positive Terminal

W10111140

[1] WIRING

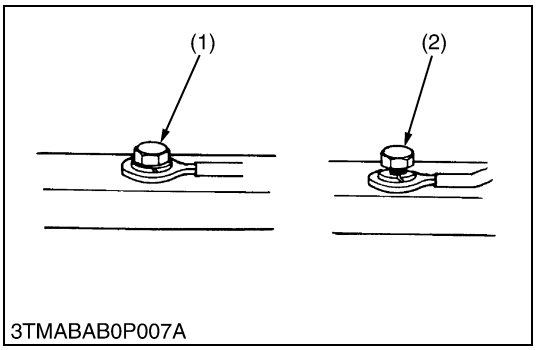

3TMABAB0P007A

- Securely tighten wiring terminals.

(1) Correct (Securely Tighten)
(2) Incorrect (Loosening Leads to Faulty Contact)

W10112160

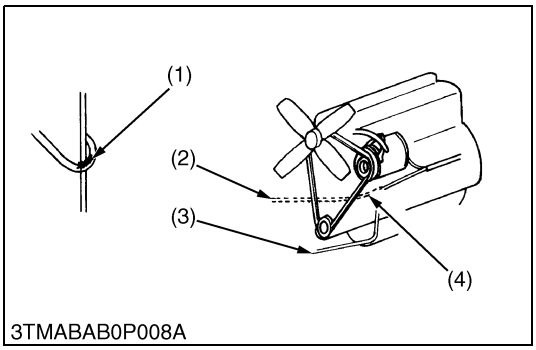

3TMABAB0P008A

- Do not let wiring contact dangerous part.

(1) Dangerous Part
(2) Wiring (Incorrect)
(3) Wiring (Correct)
(4) Dangerous Part

W10113130

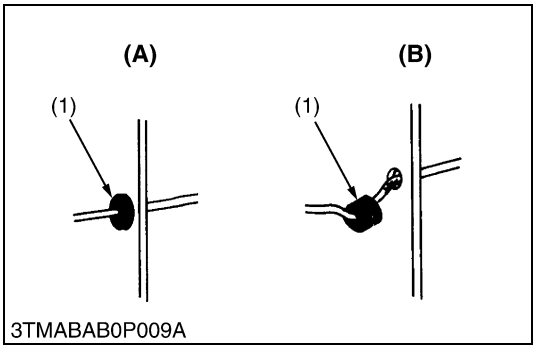

3TMABAB0P009A

- Securely insert grommet.

(1) Grommet

(A) Correct
(B) Incorrect

W10113880

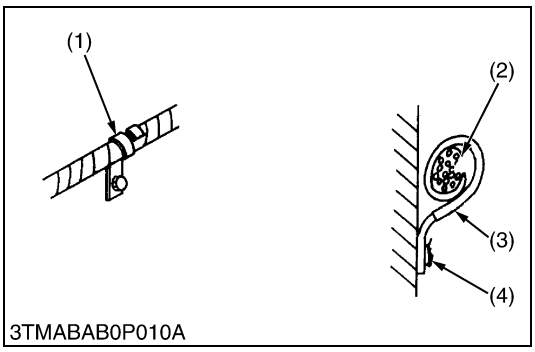

- Securely clamp, being careful not to damage wiring.

(1) Clamp
  • Wind Clamp Spirally
(2) Wire Harness
(3) Clamp
(4) Welding Dent

W10114580

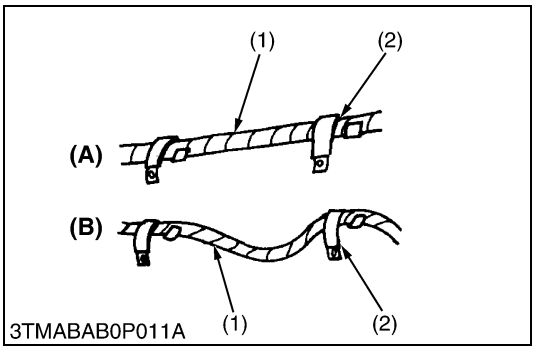

- Clamp wiring so that there is no twist, unnecessary sag, or excessive tension, except for movable part, where sag be required.

(1) Wiring
(2) Clamp
(A) Correct
(B) Incorrect

W10115870

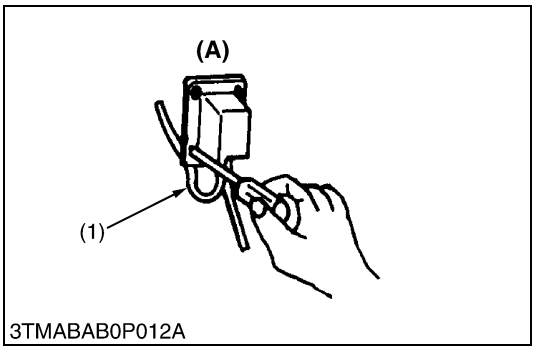

- In installing a part, take care not to get wiring caught by it.

(1) Wiring
(A) Incorrect

W10116700

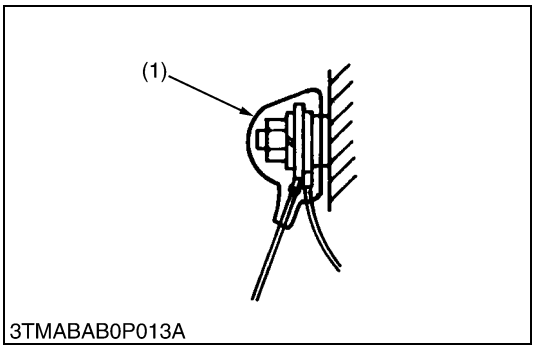

- After installing wiring, check protection of terminals and clamped condition of wiring, only connect battery.

(1) Cover
  • Securely Install Cover

W10117350

[2] BATTERY

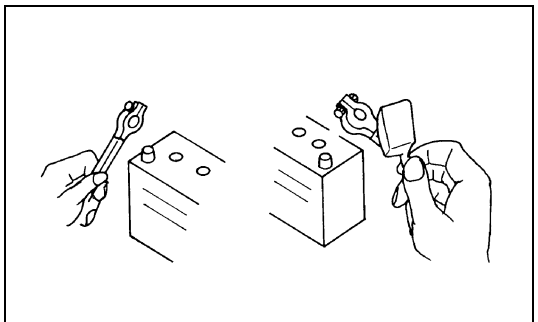

3TMABAB0P006B

- Take care not to confuse positive and negative terminal posts.
- When removing battery cables, disconnect negative cable first. When installing battery cables, check for polarity and connect positive cable first.
- Do not install any battery with capacity other than is specified (Ah).
- After connecting cables to battery terminal posts, apply high temperature grease to them and securely install terminal covers on them.
- Do not allow dirt and dust to collect on battery.

CAUTION

- **Take care not to let battery liquid spill on your skin and clothes. If contaminated, wash it off with water immediately.**
- **Before recharging the battery, remove it from the machine.**
- **Before recharging, remove cell caps.**
- **Do recharging in a well-ventilated place where there is no open flame nearby, as hydrogen gas and oxygen are formed.**

W10118160

[3] FUSE

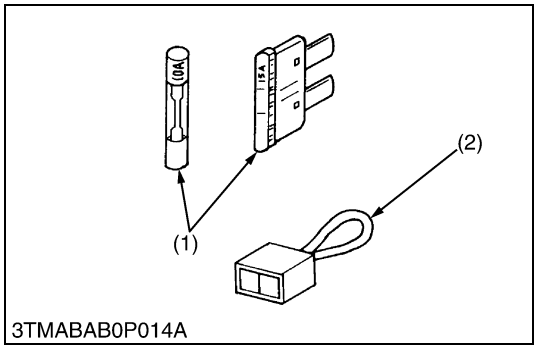

3TMABAB0P014A

- Use fuses with specified capacity.
  Neither too large or small capacity fuse is acceptable.
- Never use steel or copper wire in place of fuse.
- Do not install working light, radio set, etc. on machine which is not provided with reserve power supply.
- Do not install accessories if fuse capacity of reserve power supply is exceeded.

(1) Fuse (2) Slow Blow Fuse

W10120920

[4] CONNECTOR

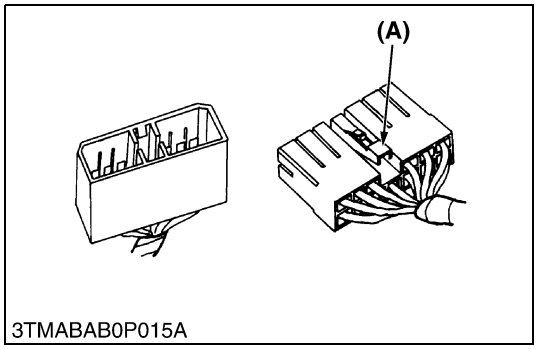

3TMABAB0P015A

- For connector with lock, push lock to separate.

(A) Push

W10122110

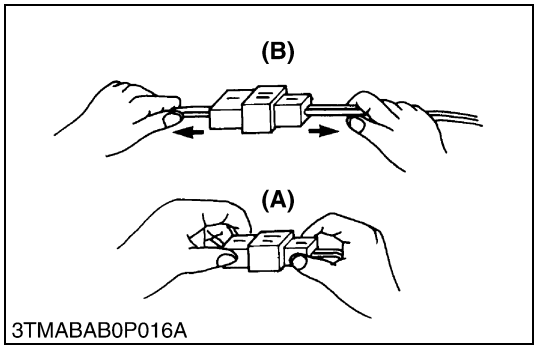

3TMABAB0P016A

- In separating connectors, do not pull wire harnesses.
- Hold connector bodies to separate.

(A) Correct **(B) Incorrect**

W10122720

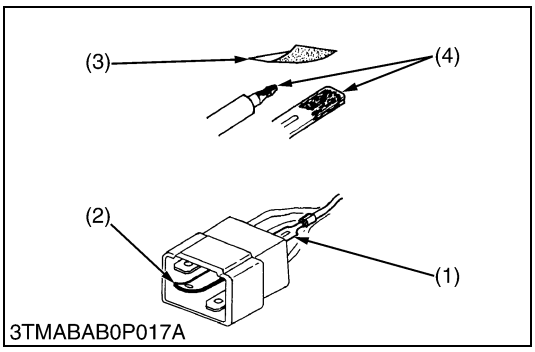

3TMABAB0P017A

- Use sandpaper to remove rust from terminals.
- Repair deformed terminal. Make certain there is no terminal being exposed or displaced.

(1) Exposed Terminal
(2) Deformed Terminal
(3) Sandpaper
(4) Rust

W10123460

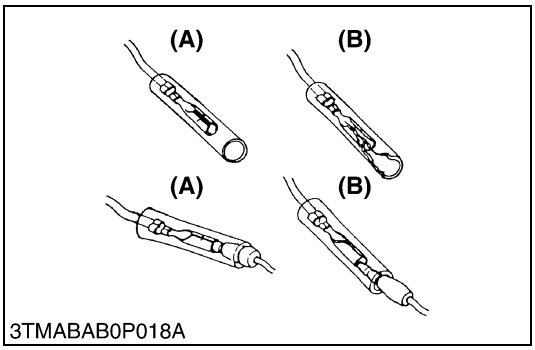

3TMABAB0P018A

- Make certain that there is no female connector being too open.

(A) Correct
(B) Incorrect

W10124300

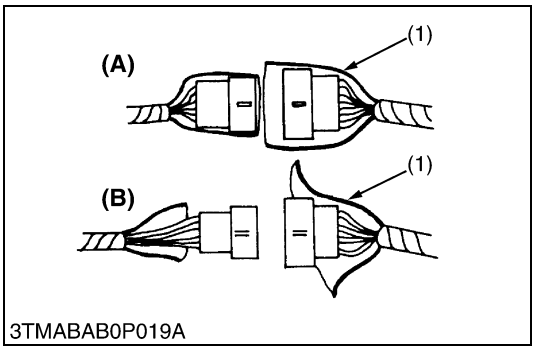

3TMABAB0P019A

- Make certain plastic cover is large enough to cover whole connector.

(1) Cover
(A) Correct
(B) Incorrect

W10125190

[5] HANDLING OF CIRCUIT TESTER

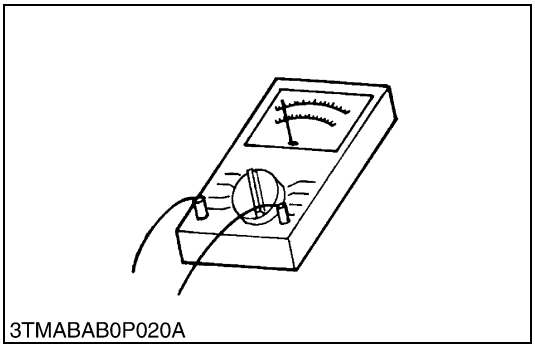
3TMABAB0P020A

- Use tester correctly following manual provided with tester.
- Check for polarity and range.

W10126840

5. LUBRICANTS FUEL AND COOLANT

	Place	Capacity				Lubricants, fuel and coolant
		B1710D B2110D B2410D	B2110DB B2410DB	B2110HDB B2410HDB	B2710HDB	
1	Fuel tank	24 L 6.3 U.S.gals. 5.3 Imp.gals.			26 L 6.9 U.S.gals. 5.7 Imp.gals.	No. 2-D diesel fuel No. 1-D diesel fuel if temperature is below –10 °C (14 °F)
2	Coolant system with recovery tank	3.8 L 4.0 U.S.qts. 3.3 Imp.qts.			4.5 L 4.7 U.S.qts. 4.0 Imp.qts.	Fresh clean water (soft water) with anti-freeze
3	Engine crankcase	3.0 L 3.2 U.S.qts. 2.6 Imp.qts.			4.1 L 4.3 U.S.qts. 3.6 Imp.qts.	Engine oil : API service CC or CD class Below 0 °C (32 °F) : SAE10W, 10W-30 or 10W-40 0 to 25 °C (32 to 77 °F): SAE20, 10W-30 or 10W-40 Above 25 °C (77 °F): SAE30, 10W-30 or 10W-40
4	Transmission case	11.5 L 3.04 U.S.gals. 2.53 Imp.gals.		12.5 L 3.30 U.S.gals. 2.75 Imp.gals.	15.5 L 4.10 U.S.gals. 3.41 Imp.gals.	KUBOTA SUPER UDT fluid*
5	Front axle case	3.7 L 3.9 U.S.qts. 3.3 Imp.qts.	4.5 L 4.8 U.S.qts. 4.0 Imp.qts.		5.3 L 5.6 Imp.qts. 4.7 Imp.qts.	KUBOTA SUPER UDT fluid* or SAE80, 90 gear oil

Grease

	Place	No. of greasing point	Capacity	Type of grease
6	Speed control pedal (HST pedal)	1	Until grease overflows	Multipurpose type grease
	Top link	1		
	Lift rod	1		
	Parking brake shaft	1		
	Battery terminal	2	Moderate amount	

* KUBOTA original transmission hydraulic fluid.

6. TIGHTENING TORQUES

Screws, bolts and nuts whose tightening torques are not specified in this Workshop Manual should be tightened according to the table below.

[1] GENERAL USE SCREWS, BOLTS AND NUTS

Indication on top of bolt	4 No-grade or 4T						7 7T						9 9T		
Material of bolt	SS400, S20C						S43C, S48C						SCr435, SCM435		
Material of opponent part	Ordinariness			Aluminum			Ordinariness			Aluminum			Ordinariness		
Unit / Diameter	N·m	kgf·m	ft-lbs	N·m	kgf·m	ft-lbs	N·m	kgf·m	ft-lbs	N·m	kgf·m	ft-lbs	N·m	kgf·m	ft-lbs
M6 (6 mm, 0.24 in.)	7.85 to 9.31	0.80 to 0.95	5.79 to 6.87	7.85 to 8.82	0.80 to 0.90	5.79 to 6.50	9.81 to 11.2	1.00 to 1.15	7.24 to 8.31	7.85 to 8.82	0.80 to 0.90	5.79 to 6.50	12.3 to 14.2	1.25 to 1.45	9.05 to 10.4
M8 (8 mm, 0.31 in.)	17.7 to 20.5	1.8 to 2.1	13.1 to 15.1	16.7 to 19.6	1.7 to 2.0	12.3 to 14.4	23.6 to 27.4	2.4 to 2.8	17.4 to 20.2	17.7 to 20.5	1.8 to 2.1	13.1 to 15.1	29.5 to 34.3	3.0 to 3.5	21.7 to 25.3
M10 (10 mm, 0.39 in.)	39.3 to 45.1	4.0 to 4.6	29.0 to 33.2	31.4 to 34.3	3.2 to 3.5	23.2 to 25.3	48.1 to 55.8	4.9 to 5.7	35.5 to 41.2	39.3 to 44.1	4.0 to 4.5	29.0 to 32.5	60.9 to 70.6	6.2 to 7.2	44.9 to 52.0
M12 (12 mm, 0.47 in.)	62.8 to 72.5	6.4 to 7.4	46.3 to 53.5	–	–	–	77.5 to 90.2	7.9 to 9.2	57.2 to 66.5	62.8 to 72.5	6.4 to 7.4	46.3 to 53.5	103 to 117	10.5 to 12.0	76.0 to 86.8
M14 (14 mm, 0.55 in.)	108 to 125	11.0 to 12.8	79.6 to 92.5	–	–	–	124 to 147	12.6 to 15.0	91.2 to 108	–	–	–	167 to 196	17.0 to 20.0	123 to 144
M16 (16 mm, 0.63 in.)	167 to 191	17.0 to 19.5	123 to 141	–	–	–	197 to 225	20.0 to 23.0	145 to 166	–	–	–	260 to 304	26.5 to 31.0	192 to 224
M18 (18 mm, 0.71 in.)	246 to 284	25.0 to 29.0	181 to 209	–	–	–	275 to 318	28.0 to 32.5	203 to 235	–	–	–	344 to 402	35.0 to 41.0	254 to 296
M20 (20 mm, 0.79 in.)	334 to 392	34.0 to 40.0	246 to 289	–	–	–	368 to 431	37.5 to 44.0	272 to 318	–	–	–	491 to 568	50.0 to 58.0	362 to 419

W10345420

[2] STUD BOLTS

Material of opponent part	Ordinariness			Aluminum		
Unit / Diameter	N·m	kgf·m	ft-lbs	N·m	kgf·m	ft-lbs
M8 (8 mm, 0.31 in.)	11.8 to 15.6	1.2 to 1.6	8.68 to 11.5	8.82 to 11.8	0.90 to 1.2	6.51 to 8.67
M10 (10 mm, 0.39 in.)	24.6 to 31.3	2.5 to 3.2	18.1 to 23.1	19.7 to 25.4	2.0 to 2.6	14.5 to 18.8
M12 (12 mm, 0.47 in.)	29.5 to 49.0	3.0 to 5.0	21.7 to 36.1	31.4	3.2	23.1

W10481390

7. MAINTENANCE

No.	Item		Period	Service Time Interval								Important	Reference page
				50	100	200	300	400	800	1 year	2 years		
1	Engine oil		Change	★	☆								G-12
2	Engine oil filter		Replace	★		☆							G-12
3	Transmission fluid		Change	★			☆						G-13
4	Hydraulic oil filter (for HST)		Replace	★			☆						G-14
5	Hydraulic oil filter		Replace	★			☆						G-14
6	Clutch		Adjust	★	☆								G-14
7	Greasing		–	☆									G-15
8	Engine start system		Check	☆									G-16
9	Wheel bolt torque		Check	☆									G-17
10	Battery condition		Check		☆							***	G-18
11	Air cleaner element [Single type]		Clean		☆							*	G-18
			Replace							☆			G-18
12	Air cleaner element [Double type]	Primary element	Clean		☆							*	G-18
			Replace							☆		**	G-18
		Secondary element	Replace							☆			G-18
13	Fuel filter element		Clean		☆								G-20
			Replace					☆					G-20
14	Fan belt		Adjust		☆								G-20
15	Brake		Adjust		☆								G-21
16	Parking brake		Adjust		☆								G-21
17	Fuel line		Check		☆								G-22
			Replace								☆		G-22
18	Radiator hose and clamp		Check			☆							G-23
			Replace								☆		G-23
19	Toe-in		Adjust			☆							G-23
20	Tramsmission oil strainer		Clean				☆						G-24
21	Front axle case oil		Change				☆						G-25
22	Front axle pivot		Adjust					☆					G-25
23	Engine valve clearance		Adjust						☆				1-S18
24	Cooling system		Flash								☆		G-27
25	Coolant		Change								☆		G-27
26	Fuel system		Bleed	Service as required									G-29
27	Clutch housing water		Drain										G-29
28	Fuse		Replace										G-30
29	Light bulb		Replace										G-30

■ IMPORTANT

- **The jobs indicated by ★ must be done after the first 50 hours of operation.**
- *** : Air cleaner should be cleaned more often in dusty conditions than in normal conditions.**
- **** : Every year or every 6 times of cleaning.**
- ***** : When the battery is used for less than 100 hours per year, check the fluid level annually.**

W10357690

8. CHECK AND MAINTENANCE

CAUTION

- **Be sure to check and service the tractor on a flat place with engine shut off, the parking brake on and chock the wheels.**

[1] DAILY CHECK

To prevent trouble from occurring, it is important to know the condition of the tractor. Check the following items before starting.

Checking

- Check areas where previous trouble was experienced.
- Walk around the tractor.

1. Check the tire pressure, and check for wear and damage.
2. Check for oil and water leaks.
3. Check the engine oil level.
4. Check the transmission fluid level.
5. Check the coolant level.
6. Check the condition of seat belt and ROPS attaching hardware.
7. Check and clean the radiator screen and grill.
8. Check the screws and nuts of tires are tight.
9. Check the number plate.
10. Care of danger, warning and caution labels.
11. Clean around the exhaust manifold and the muffler of the engine.

- While sitting in the operator's seat.

1. Check the HST pedal, brake pedals and clutch pedal.
2. Check the parking brake.
3. Check the steering wheel.

- Turning the key switch.

1. Check the performance of the easy checker lights.
2. Check head lights, turn signal lights, hazard lights and other light equipment. Clean if necessary.
3. Check the performance of the meters and gauges.

- Starting the engine.

1. Check to see that the lights on the easy checker go off.
2. Check the color of the exhaust gas.
3. Check the brakes for proper operation.

[2] CHECK POINTS OF INITIAL 50 HOURS

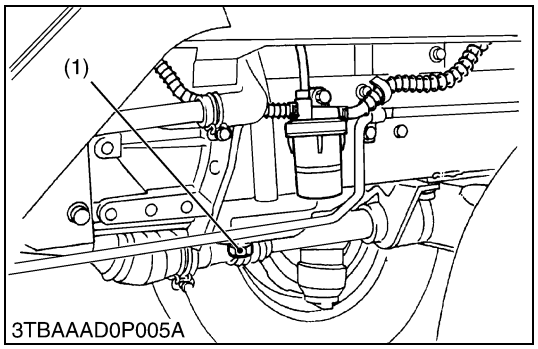

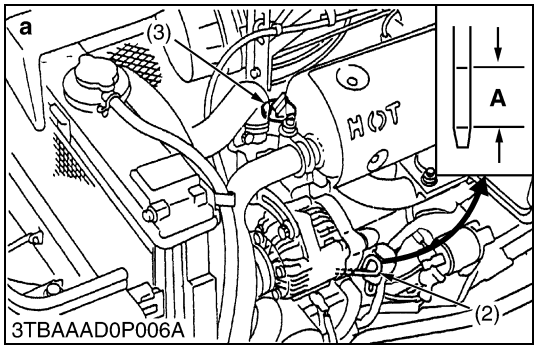

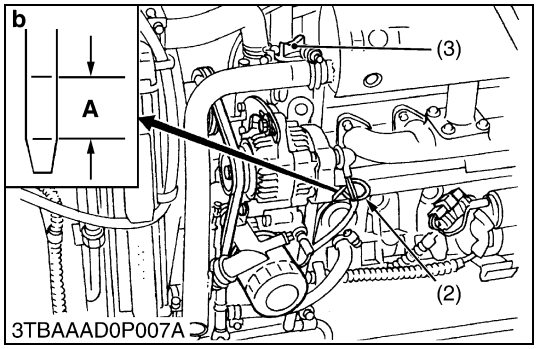

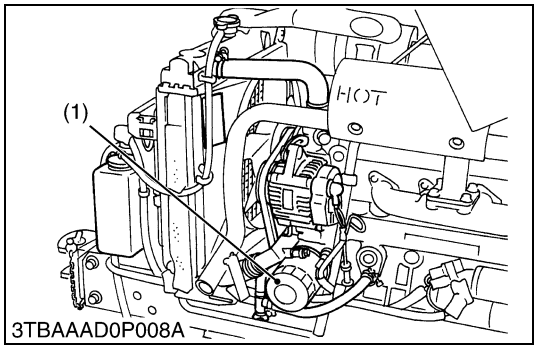

Changing Engine Oil

CAUTION

- **Before changing oil, be sure to stop the engine.**
- **Allow engine to cool down sufficiently, oil can be hot and can burn.**

1. Start and warm up the engine for approx. 5 minutes.
2. Place an oil pan underneath the engine.
3. To drain the used oil, remove the drain plug (1) at the bottom of the engine and drain the oil completely.
4. Screw in the drain plug (1).
5. Fill new oil up to upper line on the dipstick (2).

■ **IMPORTANT**

- **When using an oil of different manufacture or viscosity from the previous one, remove all of the old oil.**
- **Never mix two different types of oil.**
- **Use the proper SAE Engine Oil according to ambient temperatures.**
- **Refer to "LUBRICANTS, FUEL AND COOLANT". (See page G-8.)**

Engine oil capacity	B1710 B2110 B2410	3.0 L 3.2 U.S.qts. 2.6 Imp.qts.
	B2710	4.1 L 4.3 U.S.qts. 3.6 Imp.qts.

(1) Drain Plug
(2) Dipstick
(3) Oil Inlet

A : Oil level is acceptable within this range.
a : B1710, B2110, B2410
b : B2710

W10145330

Replacing Engine Oil Filter Cartridge

CAUTION

- **Be sure to stop the engine before changing oil filter cartridge.**
- **Allow engine to cool down sufficiently, oil can be hot and can burn.**

1. Remove the oil filter cartridge with the filter wrench.
2. Apply a slight coat of oil onto the new cartridge gasket.
3. To install the new cartridge, screw it in by hand. Over tightening may cause deformation of rubber gasket.
4. After the new cartridge has been replaced, the engine oil normally decrease a little. Thus see that the engine oil does not leak through the seal and be sure to read the oil level on the dipstick. Then, replenish the engine oil up to the specified level.

■ **IMPORTANT**

- **To prevent serious damage to the engine, replacement element must be highly efficient. Use only a KUBOTA genuine filter or its equivalent.**

(1) Engine Oil Filter

W10148920

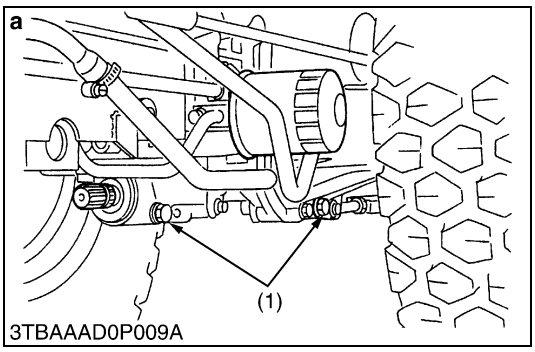

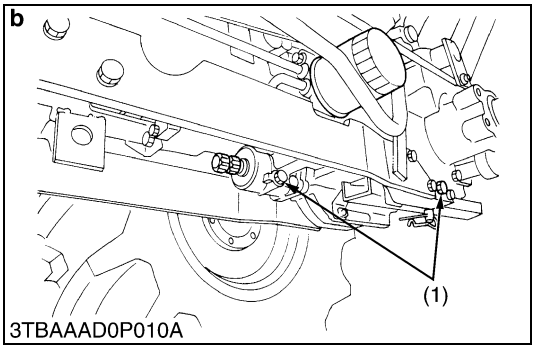

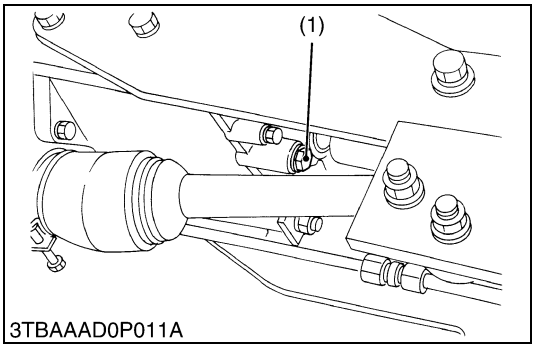

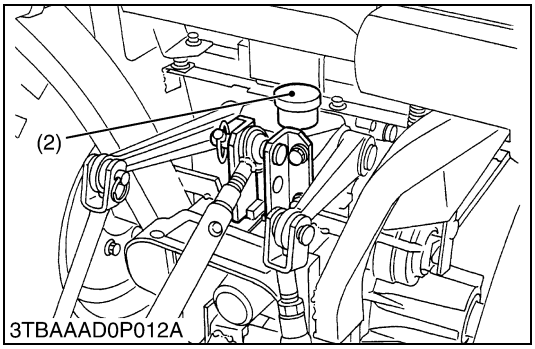

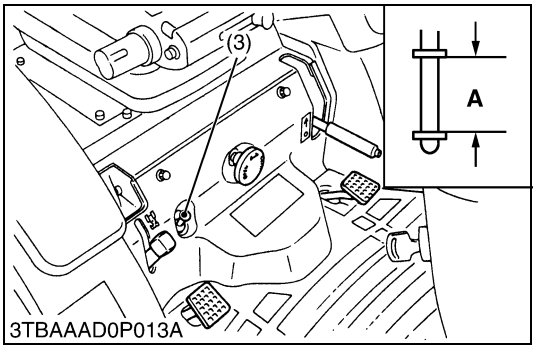

Changing Transmission Fluid

CAUTION

- **Be sure to stop the engine when checking and changing the transmission fluid.**
- **Allow engine to cool down sufficiently, oil can be hot and can burn.**

1. Place an oil pan under the tractor.
2. Remove the drain plugs (1) at the bottom of the transmission cases.
3. Drain the transmission fluid.
4. After draining, screw in the drain plugs.
5. Fill new oil from filling port after removing the filling plug (2) up to the upper notch on the dipstick (3).
6. After running the engine for a few minutes, stop it and check the oil level again, if low, add oil prescribed level.

■ IMPORTANT

- **Use only multi-grade transmission oil. Use of other oils may damage the transmission or hydraulic system.**
  Refer to "LUBRICANTS, FUEL AND COOLANT". (See page G-8.)
- **Never work the tractor immediately after changing the transmission oil. Keeping the engine at medium speed for a few minutes to prevents damage to the transmission.**
- **Do not mix different blands oil together.**

Transmission fluid capacity	B1710D B2110D B2110DB B2410D B2410DB	11.5 L 3.04 U.S.gals. 2.53 Imp.gals.
	B2110HDB B2410HDB	12.5 L 3.30 U.S.gals. 2.75 Imp.gals.
	B2710HDB	15.5 L 4.10 U.S.gals. 3.41 Imp.gals.

(1) Drain Plug
(2) Filling Port
(3) Dipstick

A : Oil level is acceptable within this range.
a : B1710, B2110, B2410
b : B2710

W10150550

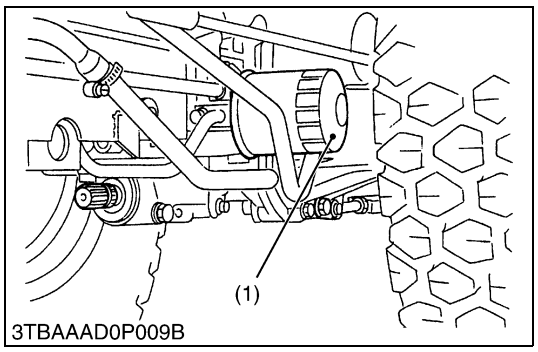

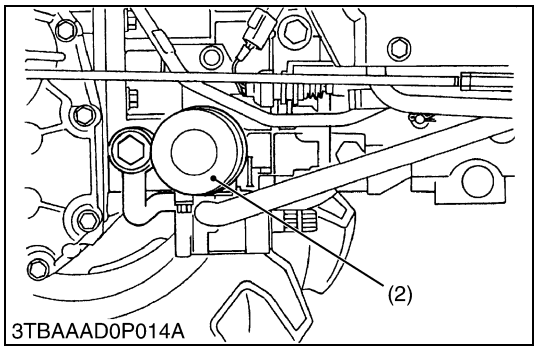

Replacing Hydraulic Oil Filter Cartridges

CAUTION

- **Be sure to stop the engine before changing the oil filters.**
- **Allow engine to cool down sufficiently, oil can be hot and can burn.**

1. Drain the transmission fluid.
2. Remove the both oil filter cartridges by using a filter wrench.
3. Apply a slight coat of oil onto the new cartridge gasket.
4. To install the new cartridge, screw it in by hand. Over tightening may cause deformation of rubber gasket.
5. After the new cartridge has been replaced, the transmission fluid level will normally decrease slightly. Make sure that the transmission fluid does not leak through the seal. Check the fluid level.

■ IMPORTANT

- **To prevent serious damage to the hydraulic system. Use only a genuine KUBOTA filter or its equivalents.**

(1) Hydraulic Oil Filter (for HST) (2) Hydraulic Oil Filter

W10155860

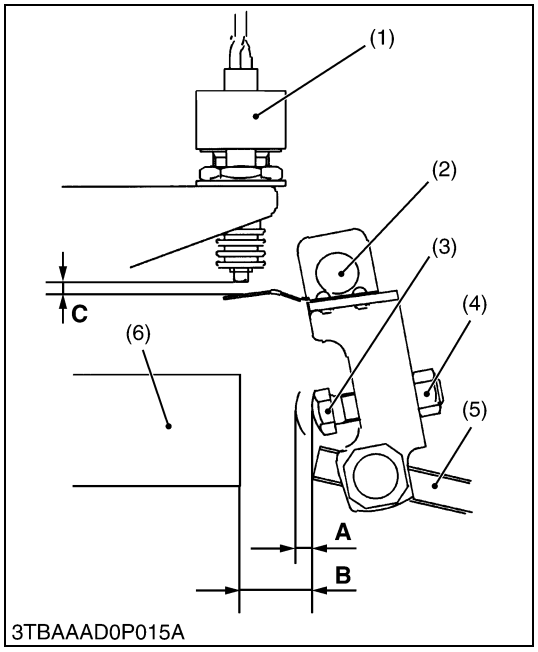

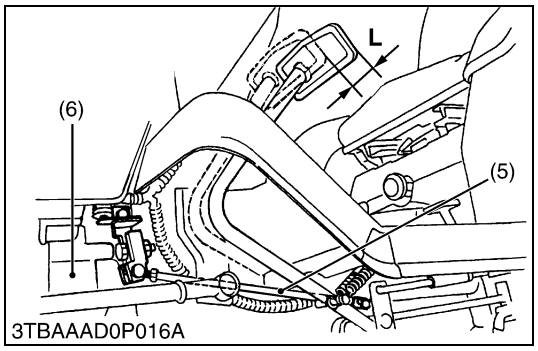

Checking Clutch Pedal Free Travel

CAUTION

- **When checking, park the tractor on flat ground, apply the parking brake, stop the engine and remove the key.**

1. Slightly depress the clutch pedal and measure stroke **"A"** at top of stopper bolt (3).
2. If the measurement is not within the factory specifications, loosen the lock nut and adjust the clutch pedal rod (5) length.
3. After adjusting it, measure total stroke **"B"** between stopper bolt (3) and clutch housing (6).
4. If the measurement is not within the factory specifications, adjust it with the clutch pedal stopper bolt (3).
5. And at the same time, adjust the clearance **"C"** between safety switch (1) and clutch pedal rod (5).

■ NOTE

- **After adjustment, sure the stopper bolt with the lock nut (4).**

Clutch pedal free travel on stopper bolt stroke **"A"**	Factory spec.	1.0 to 1.5 mm 0.039 to 0.059 in.
Reference : Clutch pedal free travel **"L"** on top of clutch pedal		20 to 30 mm 0.78 to 1.18 in.
Clutch pedal total stroke **"B"**	Factory spec.	8.0 to 9.0 mm 0.31 to 0.35 in.
Clearance **"C"**	Factory spec.	1.5 to 2.5 mm 0.059 to 0.098 in.

(1) Safety Switch
(2) Clutch Rod
(3) Stopper Bolt
(4) Lock Nut for Stopper Bolt
(5) Clutch Pedal Rod
(6) Clutch Housing

W10382980

[3] CHECK POINTS OF EVERY 50 HOURS

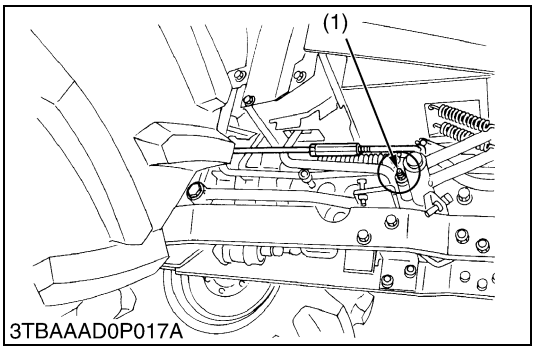

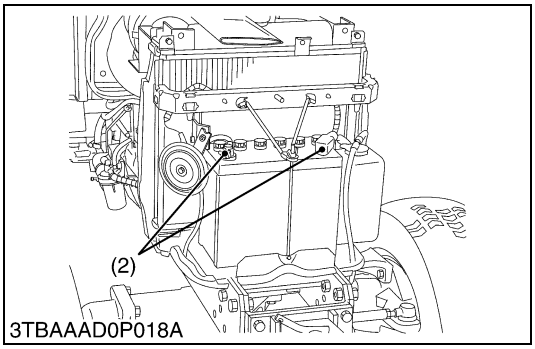

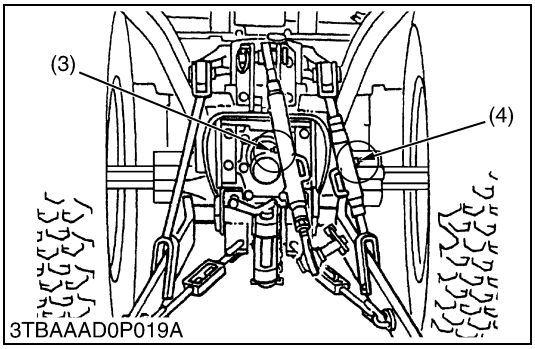

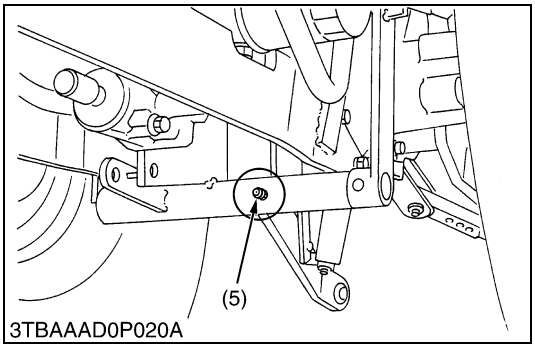

Greasing

1. Apply a grease to the following position as figures.

(1) Grease Fitting (HST Pedal)
(2) Battery Terminal
(3) Grease Fitting (Top Link)
(4) Grease Fitting (Lifting Rod RH)
(5) Grease Fitting (Parking Brake Shaft)

W10218280

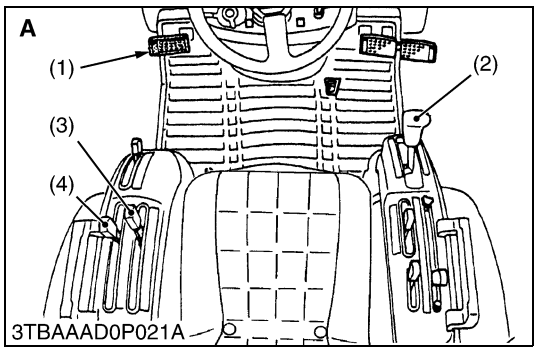

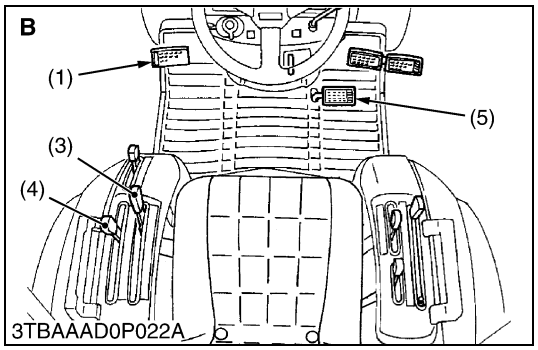

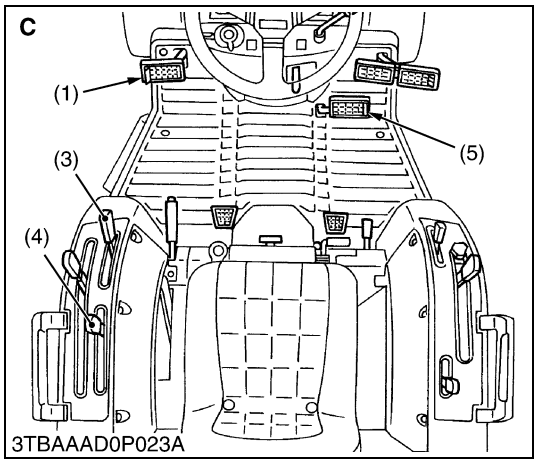

Checking Engine Start System

CAUTION

- **Do not allow anyone near the tractor while testing.**
- **If the tractor does not pass the test do not operate the tractor.**

■ **Preparation before testing**

1. Sit on operator's seat.
2. Set the parking brake and stop the engine.
3. [HST Model]
   Place the speed control pedal in **"NEUTRAL"** position.
   [Manual Transmission Model]
   Shift the main gear shift lever in **"NEUTRAL"** position.
4. Shift the PTO gear shift lever to **"OFF"** position.
5. Fully depress the clutch pedal.

■ **Test 1 : for safety switch on the clutch linkage**

1. Release the clutch pedal.
2. Turn the key to **"START"** position.
3. The engine must not crank.

■ **Test 2 : for safety switch on speed control pedal linkage or main gear shift lever**

1. Fully depress the clutch pedal.
2. Depress the speed control pedal (HST Model) or shift the main gear shift lever to **"Desired"** position (Manual Transmission Model).
3. Turn the key to **"START"** position.
4. The engine must not crank.

■ **Test 3 : for safety switch on the rear PTO gear shift linkage**

1. Fully depress the clutch pedal.
2. Place the speed control pedal in **"NEUTRAL"** position or shift the main gear shift lever to **"NEUTRAL"** position.
3. Shift the rear PTO gear shift lever to "ON" position.
4. Turn the key to **"START"** position.
5. The engine must not crank.

■ **Test 4 : for safety switch on the mid-PTO gear shift linkage**

1. Fully depress the clutch pedal.
2. Place the speed control pedal in **"NEUTRAL"** position or shift the main gear shift lever to **"NEUTRAL"** position.
3. Shift the mid-PTO gear shift lever to **"ON"** position.
4. Turn the key to **"START"** position.
5. The engine must not crank.

■ **After testing : If crank any test of the above, adjust or replace the required safety switch.**

When adjusting the safety switches keep the each linkgage at condition indicated below.

1. Clutch pedal linkage → Fully depress the clutch pedal.
2. Speed control pedal → Place the speed control pedal in **"NEUTRAL"** position. (HST Model)
3. Main gear shift lever → Shift the main gear shift lever to **"NEUTRAL"** position. (Manual Transmission Model)
4. PTO gear shift linkage → Shift rear PTO and mid-PTO gear shift lever to **"OFF"** position.

(1) Clutch Pedal
(2) Main Gear Shift Lever
(3) Mid-PTO Gear Shift Lever
(4) Rear PTO Gear Shift Lever
(5) Speed Control Pedal

A : Manual Transmission Model
B : HST Model (B2110, B2410)
C : HST Model (B2710)

W10219370

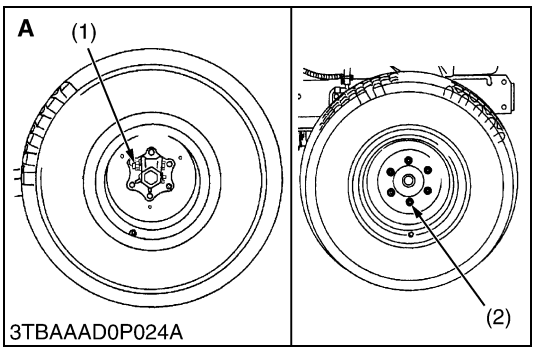

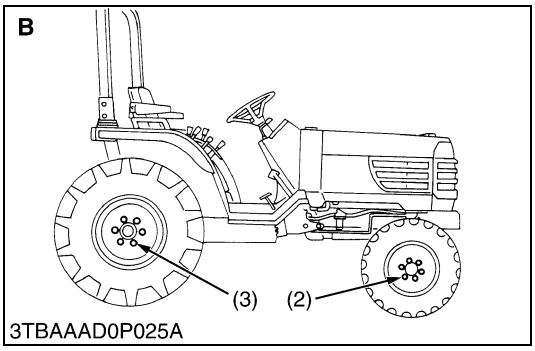

Checking Wheel Mounting Screws and Nuts Tightening Torque

CAUTION

- **Never operate tractor with a loose rim, wheel, or axle.**
- **Any time bolts and nuts are loosened, retighten to specified torque.**
- **Check all screws and nuts frequently and keep them tight.**

1. Check wheel screws and nuts regularly especially when new. If there are loosened, tighten as follows.

Tightening torque	Rear wheel hub mounting nut	B1710 B2110 B2410	108 to 125 N·m 11.0 to 12.8 kgf·m 79.6 to 92.6 ft-lbs
	Cotter setting bolt and nut		123 to 147 N·m 12.6 to 15.0 kgf·m 91.1 to 108.5 ft-lbs
	Front wheel mounting nuts	B1710 B2110 B2410 B2710	77 to 90 N·m 7.9 to 9.2 kgf·m 57.2 to 66.5 ft-lbs
	Rear wheel mounting nuts	B2710	108 to 125 N·m 11.0 to 12.8 kgf·m 79.6 to 92.6 ft-lbs

(1) Cotter Setting Bolt and Nut
(2) Front Wheel Mounting Nut
(3) Rear Wheel Mounting Screw and Nut

A : B1710, B2110, B2410
B : B2710

W10231260

[4] CHECK POINTS OF EVERY 100 HOURS

Changing Engine Oil

1. See page G-12.

W10171330

Checking Clutch Pedal Free Travel

1. See page G-14.

W10385710

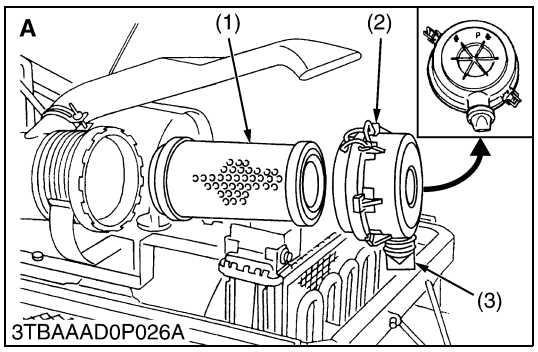

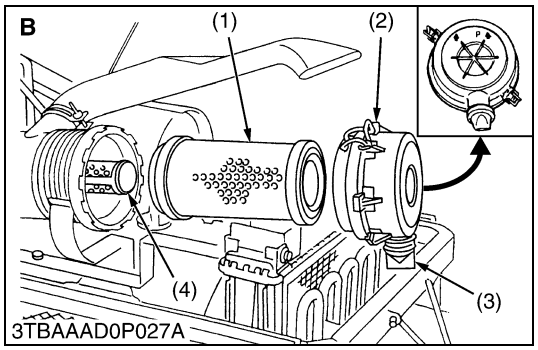

Cleaning Air Cleaner Element

[Single Element and Double Element Type]

1. Remove the air cleaner cover (2) and element (primary) (1).
2. Clean the element (primary) (1) if:
   - When dry dust adheres to the element, blow compressed air from the inside turning the element. Pressure of compressed air must be under 686 kPa (7 kgf/cm^2, 99 psi).
   - When carbon or oil adheres to the element, soak the element in detergent for 15 minutes then wash it several times in water, rinse with clean water and dry it naturally. After element is fully dried, inspect inside of the element with a light and check if it is damaged or not.
3. When replacing the air cleaner element (primary) (1), replace the secondary element (4) as well :
   Once a year or after every six times of cleaning, whichever comes first.

■ **IMPORTANT**

- **The air cleaner uses a dry element, never apply oil.**
- **Do not run the engine with filter element removed.**
- **Be sure to refit the dust cup with the arrow ↑ (on the rear of cup) upright. If the dust cup is improperly fitted, evacuator valve will not function and dust will adhere to the element.**
- **Do not touch the secondary element except in cases where replacing is required.**

■ **Evacuator Valve**

Open the evacuator valve (3) once a week under ordinary conditions or daily when used in a dusty place to get rid of large particles of dust and dirt.

(1) Element (Primary)
(2) Cover
(3) Evacuator Valve
(4) Secondary Element (Safety)

A : Single Element Type
B : Double Element Type

W10172260

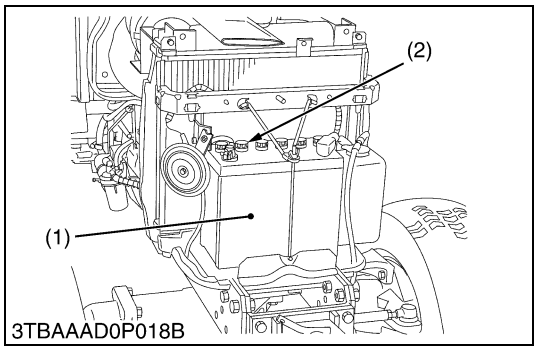

Checking Battery Condition

CAUTION

- **Never remove the vent plugs while the engine is running.**
- **Keep electrolyte away from eyes, hands and clothes. If you are spattered with it, wash it away completely with water immediately and get medical attention.**
- **Wear eye protection and rubber gloves when working around battery.**

1. Mishandling the battery shortens the service life and adds to maintenance costs.
2. The original battery is maintenance free type battery, but need some servicing.
   If the battery is weak, the engine is difficult to start and the lights become dim. It is important check the battery periodically.

(1) Battery
(2) Vent Plug

W10239000

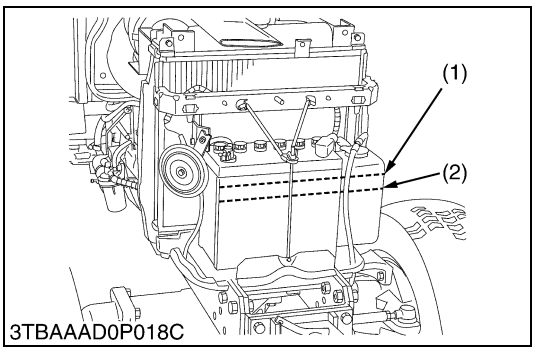

■ Battery Charging

CAUTION

- **When the battery is being activated, hydrogen and oxygen gases in the battery are extremely explosive. Keep open sparks and flames away from the battery at all times, especially when charging the battery.**
- **When charging battery, remove battery vent plugs.**
- **When disconnecting the cable from the battery, start with the negative terminal first.**
  When connecting the cable to the battery, start with the positive terminal first.
- **Never check battery charge by placing a metal object across the posts.**
  Use a voltmeter or hydrometer.

1. Make sure each electrolyte level is to the bottom of vent wells, if necessary add distiled water in a well-ventilated area.
2. The water in the electrolyte evaporates during recharging. Liquid shortage damages the battery. Excessive liquid spills over and damages the tractor body.
3. To slow charge the battery, connect the battery positive terminal to the charger positive terminal and the negative to the negative, then recharge in the standard fashion.
4. A boost charge is only for emergencies. It will partially charges the battery at a high rate and in a short time.
   When using a boost-charged battery, it is necessary to recharge the battery as early as possible.
   Failure to do this will shorten the battery's service life.
5. When the specific gravity of electrolyte become between 1.27 and 1.29 charge has completed.
6. When excharging an old battery into new one, use battery of equal specification shown in table 1.

Table 1

Battery Type	Volts (V)	Capacity at 5 H.R. (A.H.)	Reserve Capacity (min.)	Cold Cranking Amps	Normal Charging Rate (A)
50B24L(S)-MF	12	36	79	433	4.5

■ Direction for Storage

1. When storing the tractor for long periods of time, remove the battery from tractor, adjust the electrolyte to the proper level and store in a dry place out of direct sunlight.
2. The battery self-discharges while it is stored.
   Recharge it once every three months in hot seasons and once every six months in cold seasons.

(1) Highest Level (2) Lowest Level

W10240310

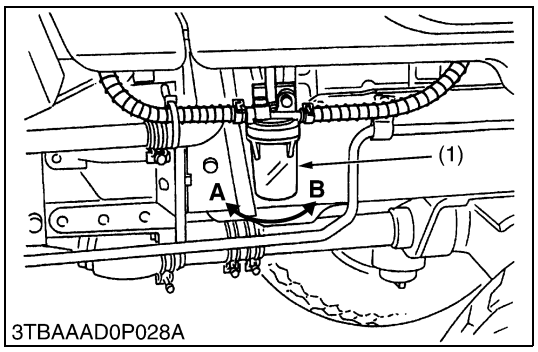

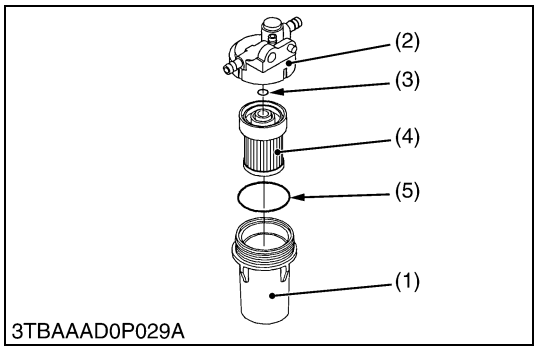

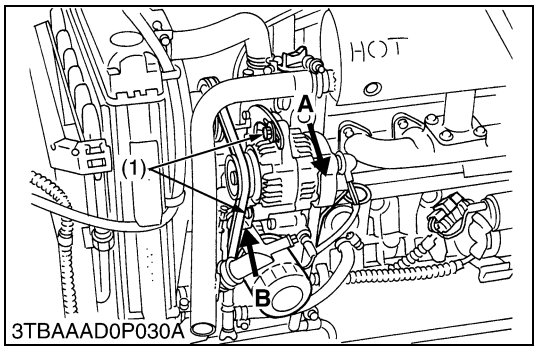

Cleaning Fuel Filter

This job should not be done in the field, but in a clean place.

1. Loosen and remove the fuel filter bowl (1), and rinse the inside with kerosene.
2. Take out the filter element (4) and dip it in the kerosene to rinse.
3. After cleaning, reassemble the fuel filter, keeping out dust and dirt.
4. Bleed the fuel system. (See page G-29.)

■ **IMPORTANT**

- **When the fuel filter bowl has been removed, fuel stops flowing from the fuel tank. If the fuel tank is almost full, however, the fuel will flow back from the fuel return pipe to the fuel filter. Before the above checking, make sure the fuel tank is less than half-full.**

(1) Fuel Filter Bowl
(2) Filter Bracket
(3) O-ring
(4) Filter Element
(5) O-ring

A : Loosen
B : Tighten

W10174670

Checking Fan Belt Tension

CAUTION

- **Be sure to stop engine before checking belt tension.**

1. Stop the engine and remove the key.
2. Apply moderate thumb pressure to belt between pulleys.
3. If tension is incorrect, loosen the alternator mounting bolts and using a lever placed between the alternator and the engine block, pull the alternator out until the deflection of the belt falls within acceptable limits.
4. Replace fan belt if it is damaged.

Fan belt tension	Factory spec.	A deflection of between 7 to 9 mm (0.28 to 0.34 in.) when the belt is pressed in the middle of the span.

(1) Adjusting Screw

A : To tighten
B : Check the belt tension

W10179260

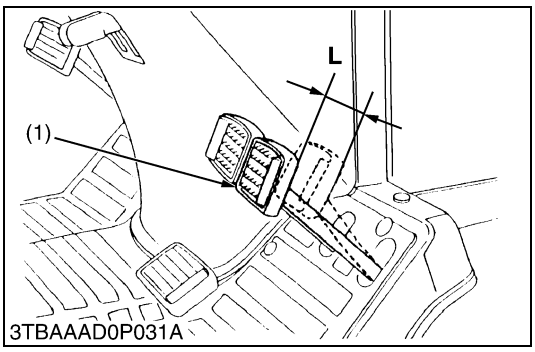

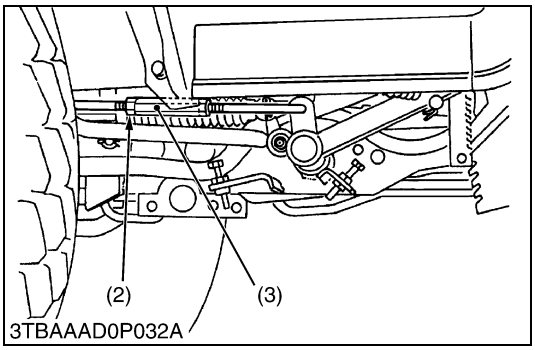

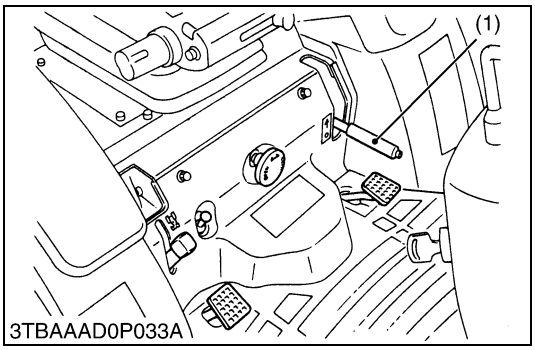

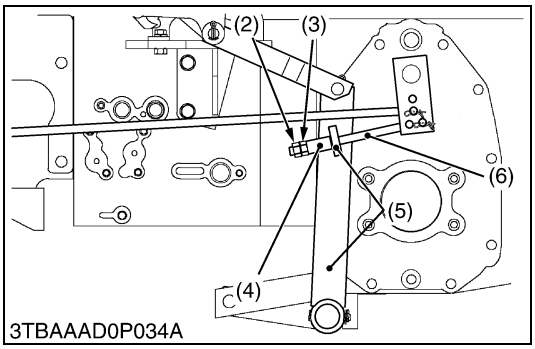

Checking Brake Pedal Free Travel

CAUTION

- **Stop the engine and chock the wheels before checking brake pedal.**
- **The difference between the right and left pedal plays must be less than 4.0 mm (0.16 in.).**

1. Release the parking brake.
2. Slightly depress the brake pedals (1) and measure free travel **(L)** at top of pedal stroke.
3. If the measurement is not within the factory specifications, loosen the lock nut (2) and turn the turnbuckle (3) to adjust the brake rod length.
4. Retighten the lock nut (2) securely.
   Keep the free travel in the right and left brake pedals equal.

Brake pedal free travel **"L"**	Factory spec.	30 to 40 mm 1.18 to 1.57 in.

(1) Brake Pedal
(2) Lock Nut
(3) Turnbuckle

L : Free Travel

W10181540

Checking Parking Brake Lever Travel

1. Pull the parking brake lever (1) to the parking position while counting the ratchet sound made by the parking brake lever (1).
2. If the counted ratchet sound is not within the factory specification, adjust the parking brake lever travel.

CAUTION

- **Stop the engine and remove the key, and the chock wheels before checking parking brake.**

Parking brake lever travel	Factory spec.	3 to 5 notches

(When adjusting)

1. Release the parking brake lever.
2. Be sure to adjust the free travel of the right and left brake pedals.
3. Place the jack under the transmission case, then remove the rear tires and set the rigid rack under the rear axles.
4. Loosen the lock nuts (2) of the right and left rods (6).
5. Tighten the adjusting nut (3) of the right rod (6) by hand until the collar (4) comes into contact with the arm (5). Make half and one more turn of the nut.
6. Tighten the adjusting nut (3) of the left rod (6) by hand until the collar (4) comes into contact with the arm (5).
7. Tighten up the lock nuts (2) of right and left rods.
8. Make sure the parking brake lever gets locked at the its 3rd, 4th or 5th notch.
9. Install the right and left tires.

■ NOTE

- **After adjusting the parking brake lever free travel :**
  - **Right and left parking brake for even braking.**
  - **With the parking brake released, make sure that the right and left tires do not drag on.**

(1) Parking Brake Lever
(2) Lock Nut
(3) Adjusting Nut
(4) Collar
(5) Parking Brake Arm
(6) Parking Brake Rod

W10258110

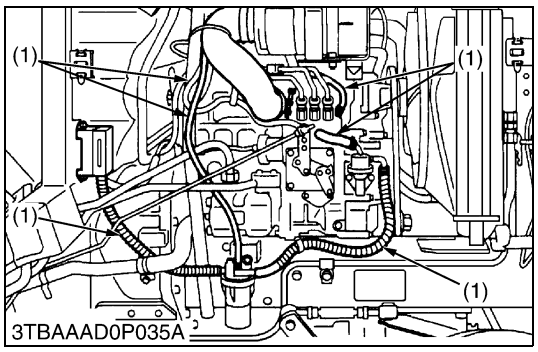

Checking Fuel Line

CAUTION

- **Stop the engine when attempting the check and change prescribed below.**
- **Remember to check the fuel line periodically. The fuel line is subject to wear and aging, fuel may leak out onto the running engine, causing a fire.**

1. Check to see that all line and hose clamps are tight and not damaged.
2. If hoses and clamps are found worn or damaged, replace or repair them at once.
3. The fuel line is made of rubber and ages regardless of period of service. Replace the fuel pipe together with the clamp every two years and securely tighten.
4. However if the fuel pipe and clamp are found damaged or deteriorated earlier than two years, then change or remedy.
5. After the fuel line and clamp have been changed, bleed the fuel system. (See page G-29.)

■ **IMPORTANT**

- **When the fuel line is disconnected for change, close both ends of the fuel line with a piece of clean cloth or paper to prevent dust and dirt from entering. Entrance of dust and dirt causes malfunction of the fuel injection pump. In addition, particular care must be taken not to admit dust and dirt into the fuel pump.**

(1) Fuel Hose

W10177390

[5] CHECK POINTS OF EVERY 200 HOURS

Replacing Engine Oil Filter Cartridge

1. See page G-12.

W10194500

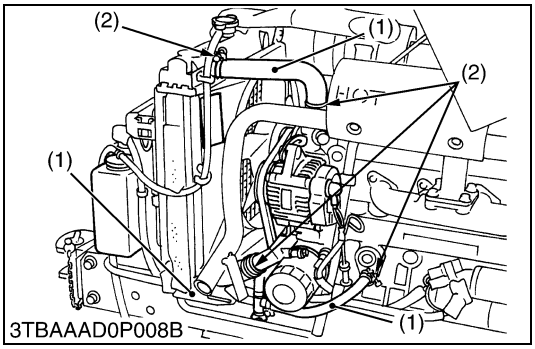

Checking Radiator Hose and Hose Clamp

Check to see if radiator hoses are properly fixed every 200 hours of operation or six months, whichever comes first.

1. If hose clamps are loose or water leaks, tighten bands securely.
2. Replace hoses and tighten hose clamps securely, if radiator hoses are swollen, hardened or cracked.
   Replace hoses and hose clamps every 2 years or earlier if checked and found that hoses are swollen, hardened or cracked.

■ Precaution at Overheating

Take the following actions in the event the coolant temperature be nearly or more than the boiling point, what is called **"Overheating"**.

1. Stop the machine operation in a safe place and keep the engine unloaded idling.
2. Don't stop the engine suddenly, but stop it after about 5 minutes of unloaded idling.
3. Keep yourself well away from the machine for further 10 minutes or while the steam blown out.
4. Checking that there gets no danger such as burn, get rid of the causes of overheating according to the manual, see **"Troubleshooting"** section, and then, start again the engine.

(1) Radiator Hose (2) Clamp

W10195610

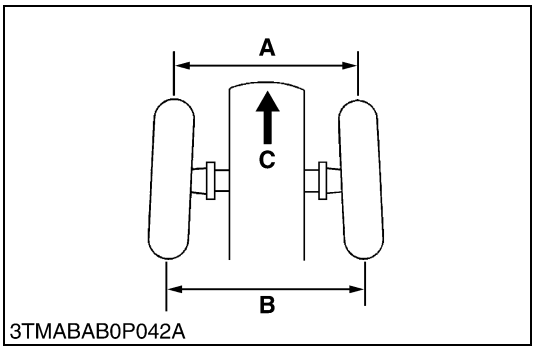

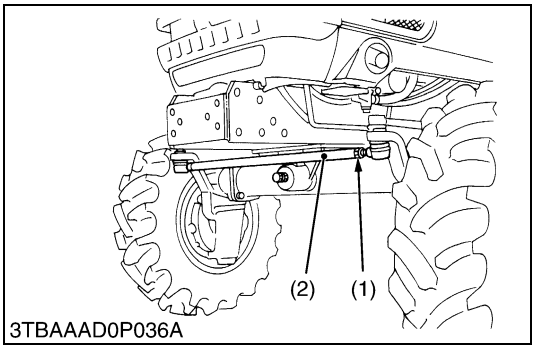

Adjusting Toe-in

1. Park the tractor on the flat place.
2. Inflate the tires to the specified pressure.
3. Turn steering wheel so front wheels are in the straight ahead position.
4. Lower the implement, lock the parking brake and stop the engine.
5. Measure distance between tire beads at front of tire, hub height.
6. Measure distance between tire beads at rear of tire, hub height.
7. Front distance should be 0 to 7 or 10 mm (0 to 0.28 or 0.39 in.) less than rear distance.
8. If the measurement is not within the factory specifications, adjust by changing the tie-rod length.

Toe-in (**B**-**A**)	Factory spec.	B1710 B2110 B2410	0 to 10 mm 0 to 0.39 in.
		B2710	0 to 7 mm 0 to 0.28 in.

■ Adjusting

1. Loosen the lock nut (1) and turn the tie-rod (2) to adjust the tie-rod length until the proper toe-in measurement is obtained.
2. Retighten the lock nut (1).

(1) Lock Nut
(2) Tie-rod

(A) Wheel to Wheel Distance at front
(B) Wheel to Wheel Distance at rear
(C) Front

W10200260

[6] CHECK POINTS OF EVERY 300 HOURS

Changing Transmission Fluid

1. See page G-13.

W10273510

Replacing Hydraulic Oil Filter Cartridges

1. See page G-14.

W10273970

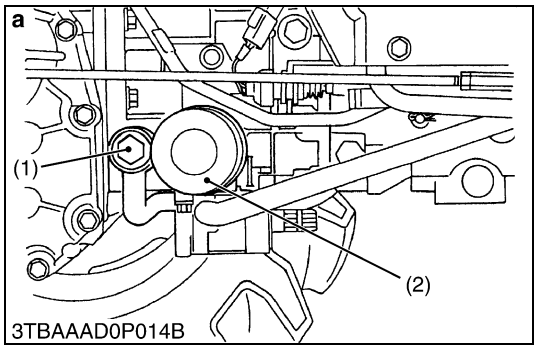

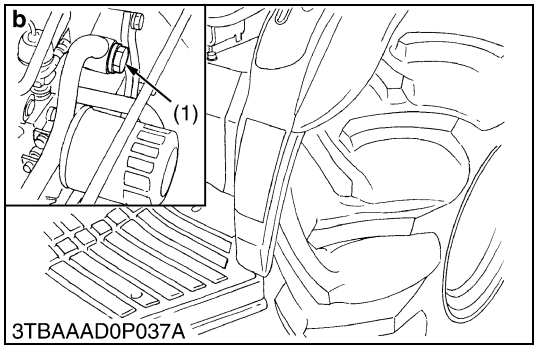

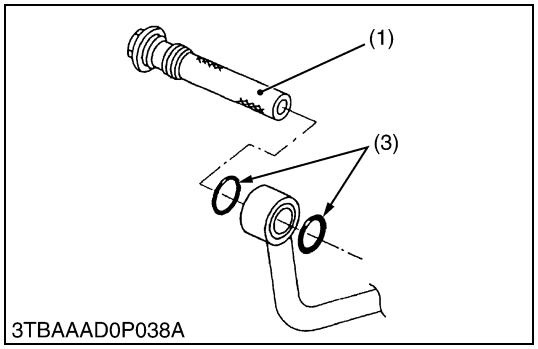

Cleaning Transmission Oil Strainer

1. Clean the strainer with nonflammable solvent.

■ **NOTE**

- **When changing the transmission fluid, disassemble and rinse the strainer with nonflammable solvant to completely clean off fillings.**
- **When reassembling, be careful not to damage the parts.**
- **Since the fine fillings in the oil could impair the component parts of the hydraulic system precision built to withstand high pressure, the suction line end is provided with an oil strainer.**
- **Please do the replacing oil filter cartridge (2) and the cleaning oil strainer (1) at the same time. And when replacing, reinstall the oil strainer first.**

(1) Strainer
(2) Hydraulic Oil Filter Cartridge
(3) O-ring

A : B1710, B2110, B2410
B : B2710

W10215710

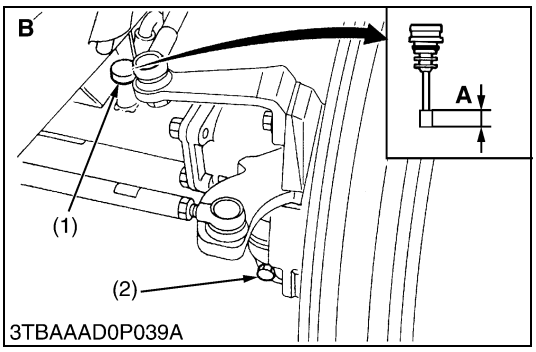

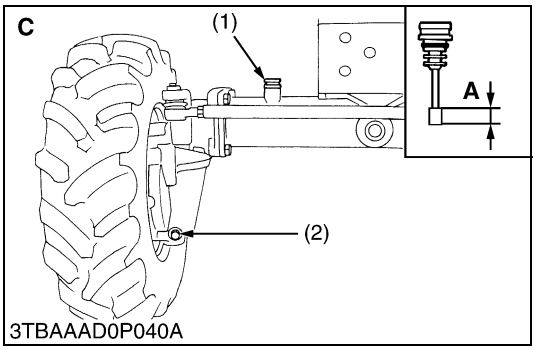

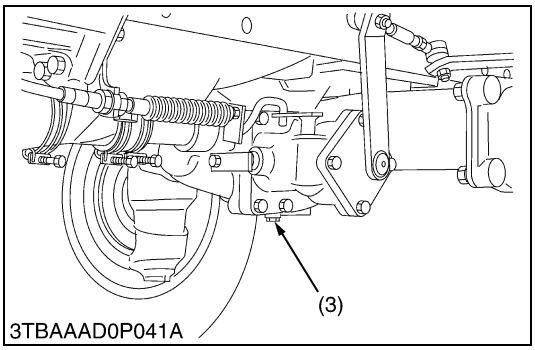

Cleaning Front Axle Case Oil

CAUTION

- **Be sure to stop the engine before changing the front axle case oil.**
- **Allow engine to cool down sufficiently, oil can be hot and can burn.**

1. Remove the both right and left drain plugs (2) and filling plug (1).
2. Remove the drain plug (3) for bi-speed turn gear case (Bi-speed turn model only).
3. Drain the front axle case oil.
4. After draining, screw in the drain plugs.
5. Fill new oil from filling port with specified amount of oil.

■ **IMPORTANT**

- **After ten minutes, check the oil level again, add oil to prescribed level.**
- **Use KUBOTA SUPER UDT fluid or SAE 80, 90 gear oil. Refer to "LUBRICANTS, FUEL AND COOLANT". (See page G-8.)**

Front axle case oil capacity	B1710D B2110D B2410D	3.7 L 3.9 U.S.qts. 3.3 Imp.qts.
	B2110DB B2110HDB B2410DB B2410HDB	4.5 L 4.8 U.S.qts. 4.0 Imp.qts.
	B2710HDB	5.3 L 5.6 U.S.qts. 4.7 Imp.qts.

(1) Filling Plug
(2) Drain Plug
(3) Drain Plug for Bi-speed Turn Gear Case

A : Oil level is acceptable within this range.
B : B1710, B2110, B2410
C : B2710

W10158160

[7] CHECK POINTS OF EVERY 400 HOURS

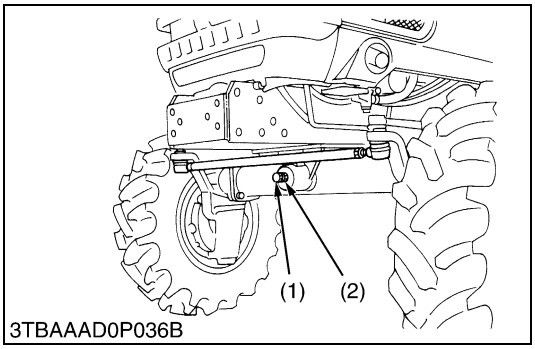

Adjusting Front Axle Pivot

1. Loosen the lock nut (2), tighten the adjusting screw (1) all the way, and then loosen the adjusting screw (1) by 1/6 turn.
2. Retighten the lock nut (2).

■ **NOTE**

- **If the axle pivot pin adjustment is not correct, front wheel vibration can occur causing vibration in the steering wheel.**

(1) Adjusting Screw
(2) Lock Nut

W10207970

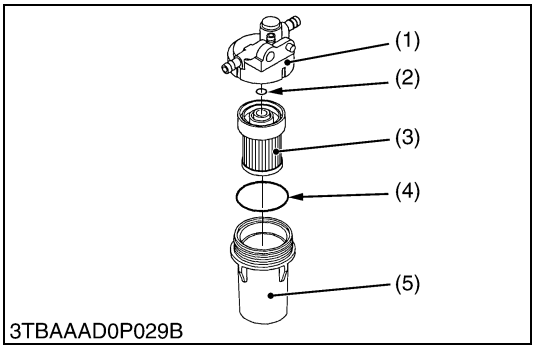

Replacing Fuel Filter Element

1. The fuel filter element should be replaced every 400 yours. See page G-20.

(1) Filter Bracket
(2) O-ring
(3) Filter Element
(4) O-ring
(5) Fuel Filter Bowl

W10279190

[8] CHECK POINTS OF EVERY 800 HOURS

Checking Valve Clearance

1. See page 1-S18.

W10210330

[9] CHECK POINTS OF EVERY 1 YEAR

Replacing Air Cleaner Element (Primary) and Secondary Element

1. See page G-18.

W10211250

[10] CHECK POINTS OF EVERY 2 YEARS

Replacing Radiator Hose (Water Pipes)

1. Replace the hoses and clamps.
   Refer to **"Checking Radiator Hose and Hose Clamp"**. (See page G-23.)

W10211760

Replacing Fuel Hose

1. Replace the fuel hoses and clamps, if necessary.
   Refer to **"Checking Fuel Line"**. (See page G-22.)

W10212310

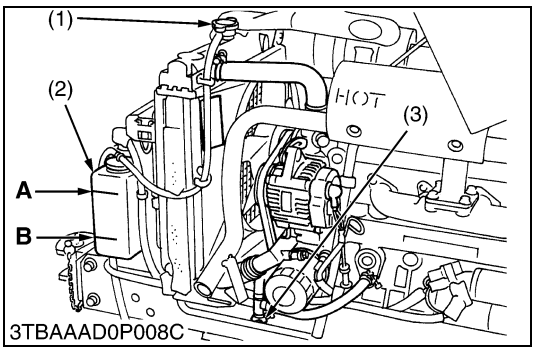

Flushing Cooling System and Changing Coolant

CAUTION

- **Do not remove the radiator cap when the engine is hot. Then loosen cap slightly to the stop to relieve any excess pressure before removing cap completely.**

1. Stop the engine and let cool down.
2. To drain the coolant, open the radiator drain plug (3) and remove radiator cap (1). The radiator cap (1) must be removed to completely drain the coolant.
3. After all coolant is drained, close the drain plug (3).
4. Fill with clean water and cooling system cleaner.
5. Follow directions of the cleaner instruction.
6. After flushing, fill with clean water and anti-freeze until the coolant level is just below the port. Install the radiator cap (1) securely.
7. Fill with coolant up to **"FULL"** mark on the recovery tank (2).
8. Start and operate the engine for few minutes.
9. Stop the engine and let cool. Check coolant level of recovery tank (2) and add coolant if necessary.

■ **IMPORTANT**

- **Do not start engine without coolant.**
- **Use clean, fresh water and anti-freeze to fill the radiator and recovery tank.**
- **When the anti-freeze is mixed with water, the anti-freeze mixing ratio must be less than 50 %.**
- **Securely tighten radiator cap. If the cap is loose or improperly fitted, water may leak out and the engine could overheat.**
- **Refer to "LUBRICANTS, FUEL AND COOLANT". (See page G-8.)**

Coolant capacity (with recovery tank)	B1710 B2110 B2410	3.7 L 3.9 U.S.qts. 3.0 Imp.qts.
	B2710	4.5 L 4.8 U.S.qts. 4.0 Imp.qts.

(1) Radiator Cap
(2) Recovery Tank
(3) Drain Plug

A : FULL
B : LOW

W10213070

Flashing Cooling system and Changing Coolant (Continued)

■ Anti-Freeze

If coolant freezes, it can damage the cylinders and radiator. It is necessary, if the ambient temperature falls below 0 °C (32 °F), to remove coolant after operating or to add anti-freeze to it.

1. There are two types of anti-freeze available; use the permanent type (PT) for this engine.
2. Before adding anti-freeze for the first time, clean the radiator interior by pouring fresh water and draining it a few times.
3. The procedure for mixing of water and anti-freeze differs according to the make of the anti-freeze and the ambient temperature, basically is should be referred to SAE J1034 standard, more specifically also to SAE J814c.
4. Mix the anti-freeze with water, and then fill in to the radiator.

Vol % Anti-freeze	Freezing Point		Boiling Point*	
	°C	°F	°C	°F
40	–24	–12	106	222
50	–37	–34	108	226

* At 760 mmHg pressure (atmospheric). A higher boiling point is obtained by using a radiator pressure cap which permits the development of pressure within the cooling system.

■ NOTE

- **The above date represent industry standards that necessitate a minimum glycol content in the concentrated anti-freeze.**
- **When the coolant level drops due to evaporation, add water only. In case of leakage, add anti-freeze and water in the specified mixing ratio.**
- **Anti-freeze absorbs moisture. Keep unused anti-freeze in a tightly sealed container.**
- **Do not use radiator cleaning agents when anti-freeze has been added to the coolant. (Anti-freeze contains an anti-corrosive agent, which will react with the radiator cleaning agent forming sludge which will affect the engine parts.)**

W10224920

[11] OTHERS

Bleeding Fuel System

Air must removed :

1. When the fuel filter or lines are removed.
2. When tank is completely empty.
3. After the tractor has not been used for a long period of time.

Bleeding procedure is as follows :

1. Fill the fuel tank with fuel.
2. Start the engine and run for about 30 seconds, and then stop the engine.

W10291390

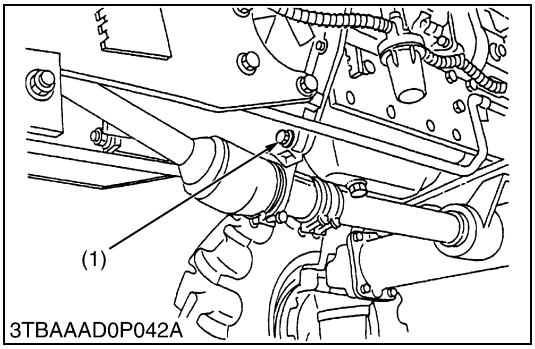

Draining Clutch Housing Water

■ **NOTE**

- **The tractor is equipped with drain plug (1) under the clutch housing.**
- **After operating in rain, snow or tractor has been washed, water may get into the clutch housing.**

1. Remove the drain plug (1) and drain the water, then install the plug again.

(1) Water Drain Plug

W10233060

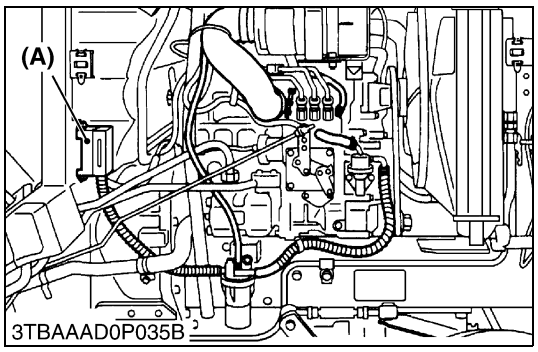

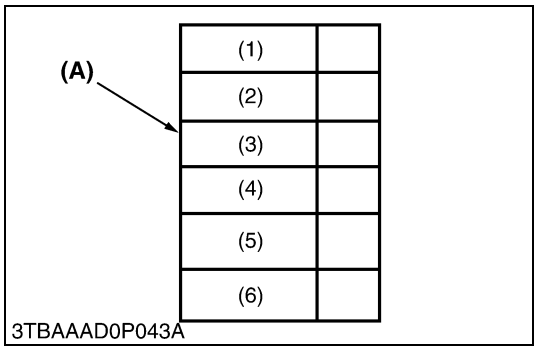

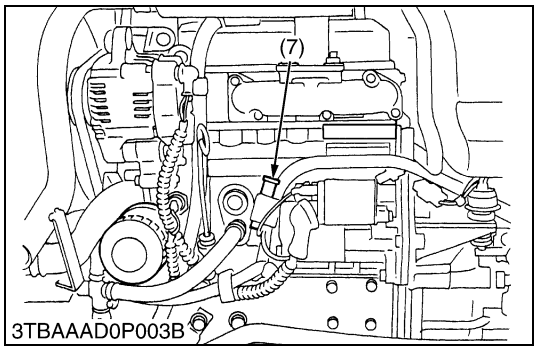

Replacing Fuse

1. The tractor electrical system is protected from potential damage by fuses.
   A blown fuse indicates that there is an overload or short somewhere in the electrical system.
2. If any of the fuses should blow, replace with a new one of the same capacity.

■ **IMPORTANT**

- **Before replacing a blown fuse, determine why the fuse blew and make any necessary repairs. Failure to follow this procedure may result in serious damage to the tractor electrical system. Refer to troubleshooting section of this manual or your local KUBOTA distributor for specific information dealing with electrical problems.**
  If any of them should blow, replace with a new one of the same capacity.

■ **Protected Circuit**

Fuse No.	Capacity (A)	Protected circuit
1	20	Head light, Horn
2	10	Key stop
3	15	Work light
4	10	Flasher, Brake, Panel, Alternator
5	10	Parking
6	15	Hazard
7	Slow blow fuse 50 A	Check circuit against wrong battery connection

(A) Fuse Box

W10234300

Replacing Light Bulb

1. Head lights and rear combination lights:
   Take the bulb out of the light body and replace with a new one.
2. Other lights:
   Detach the lens and replace the bulb.

Light	Capacity
Head light	45 W / 40 W
Tail light	10 W
Brake stop light	21 W
Turn signal / Hazard light	21 W
Sidemarker light	5 W
Number plate light	10 W

W10238020

9. SPECIAL TOOLS

[1] SPECIAL TOOLS FOR ENGINE

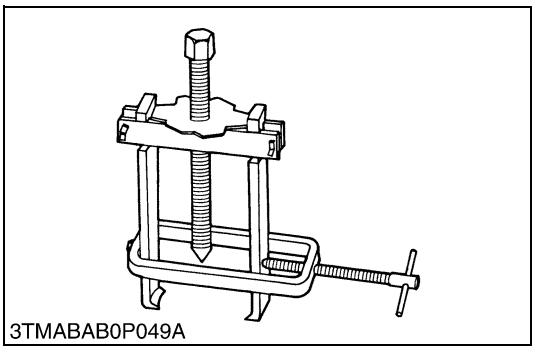
3TMABAB0P049A

Special Use Puller Set

Code No: 07916-09032

Application: Use exclusively for pulling out bearing, gears and other parts with ease.

W10240500

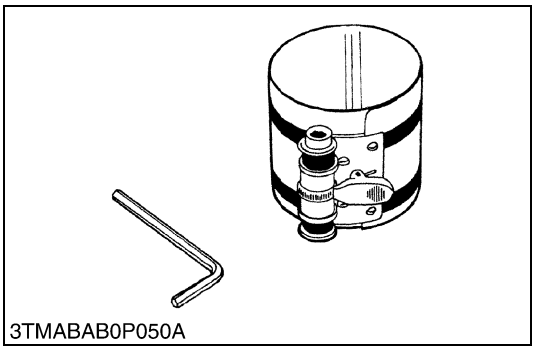
3TMABAB0P050A

Piston Ring Compressor

Code No: 07909-32111

Application: Use exclusively for pushing in the piston with piston rings into the cylinder.

W10241000

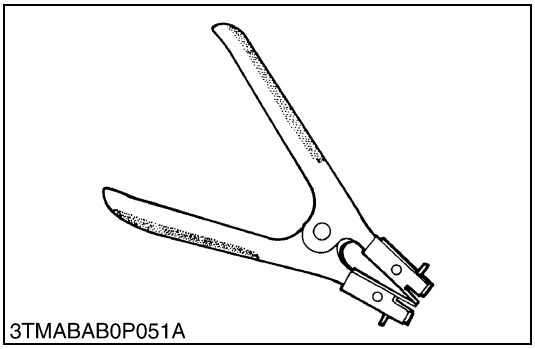
3TMABAB0P051A

Piston Ring Tool

Code No: 07909-32121

Application: Use exclusively for removing or installing the piston ring with ease.

W10241500

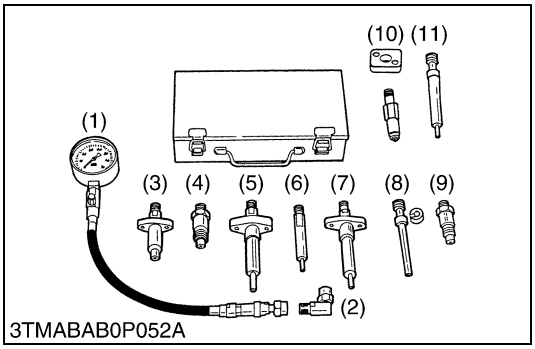

3TMABAB0P052A

Diesel Engine Compression Tester

Code No: 07909-30208 (Assembly) 07909-31251 (G)
07909-30934 (A to F) 07909-31271 (I)
07909-31211 (E and F) 07909-31281 (J)
07909-31231 (H)

Application: Use to measure diesel engine compression and diagnostics of need for major overhaul.

(1) Gauge
(2) **L** Joint
(3) Adaptor **A**
(4) Adaptor **B**
(5) Adaptor **C**
(6) Adaptor **E**
(7) Adaptor **F**
(8) Adaptor **G**
(9) Adaptor **H**
(10) Adaptor **I**
(11) Adaptor **J**

W10242000

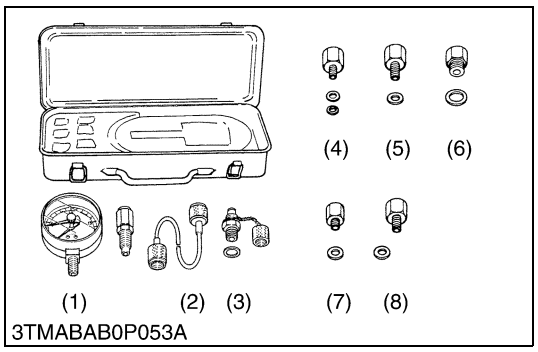

3TMABAB0P053A

Oil Pressure Tester

Code No: 07916-32032
Application: Use to measure lubricating oil pressure.

(1) Gauge
(2) Cable
(3) Threaded Joint
(4) Adaptor 1
(5) Adaptor 2
(6) Adaptor 3
(7) Adaptor 4
(8) Adaptor 5

W10243180

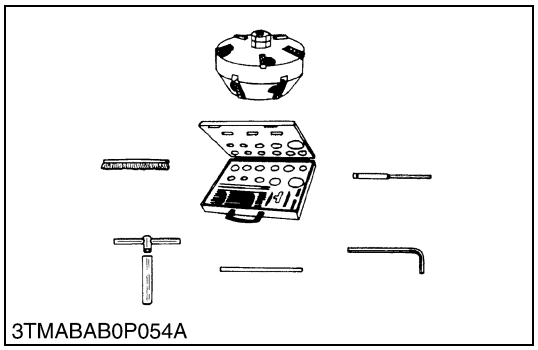
3TMABAB0P054A

Valve Seat Cutter

Code No: 07909-33102
Application: Use to reseat valves.
Angle: 0.785 rad. (45°)
0.262 rad. (15°)
Diameter: 28.6 mm (1.126 in.) 38.0 mm (1.496 in.)
31.6 mm (1.244 in.) 41.3 mm (1.626 in.)
35.0 mm (1.378 in.) 50.8 mm (2.000 in.)

W10244580

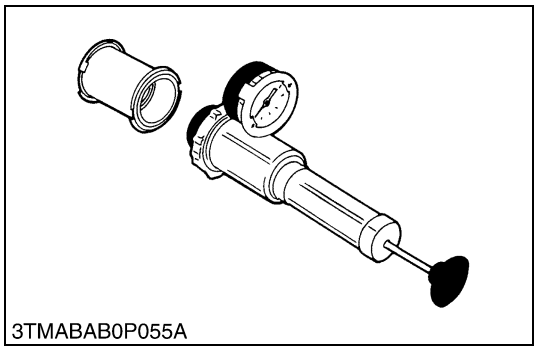
3TMABAB0P055A

Radiator Tester

Code No: 07909-31551
Application: Use to check of radiator cap pressure, and leaks from cooling system.

W10245320

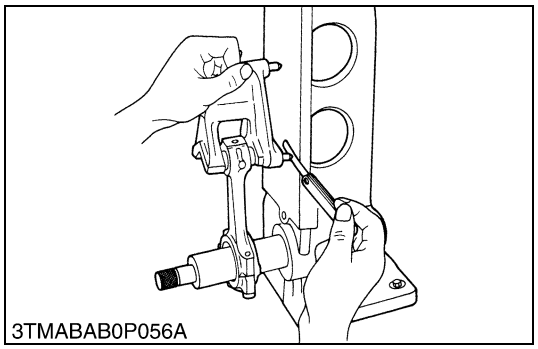
3TMABAB0P056A

Connecting Rod Alignment Tool

Code No: 07909-31661
Application: Use to check the connecting rod alignment.
Applicable: Connecting rod big end I.D.
range 30 to 75 mm (1.18 to 2.95 in.) dia.
Connecting rod length
65 to 300 mm (2.56 to 11.81 in.)

W10245830

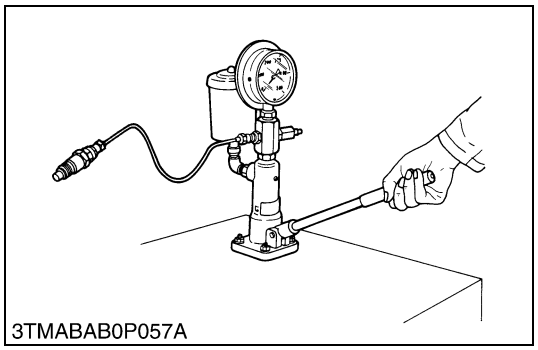
3TMABAB0P057A

Nozzle Tester

Code No: 07909-31361
Application: Use to check the fuel injection pressure and spray pattern of nozzle.
Measuring: 0 to 50 MPa
range (0 to 500 kgf/cm^2, 0 to 7000 psi)

W10246530

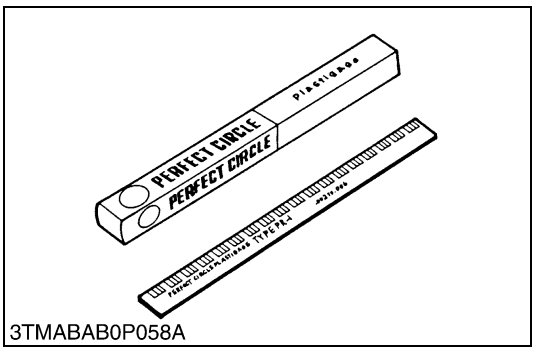

3TMABAB0P058A

Plastigage

Code No: 07909-30241
Application: Use to check the oil clearance between crankshaft and bearing, etc.
Measuring range: Green .... 0.025 to 0.076 mm (0.001 to 0.003 in.)
Red ..... 0.051 to 0.152 mm (0.002 to 0.006 in.)
Blue ..... 0.102 to 0.229 mm (0.004 to 0.009 in.)

W10247190

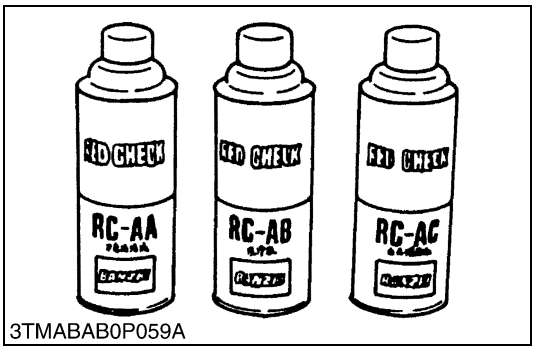

3TMABAB0P059A

Red Check

Code No: 07909-31371
Application: Use to check cracks on cylinder head, cylinder block, etc.

W10249090

■ **NOTE**

- **The following special tools are not provided, so make them referring to the figure.**

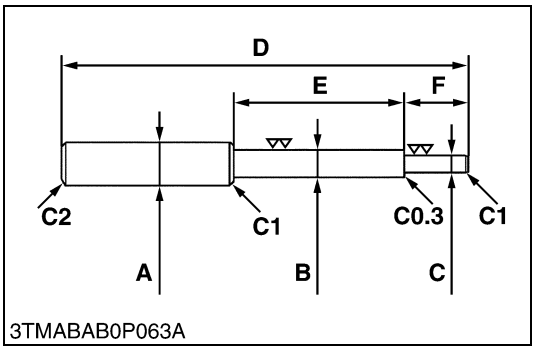

3TMABAB0P063A

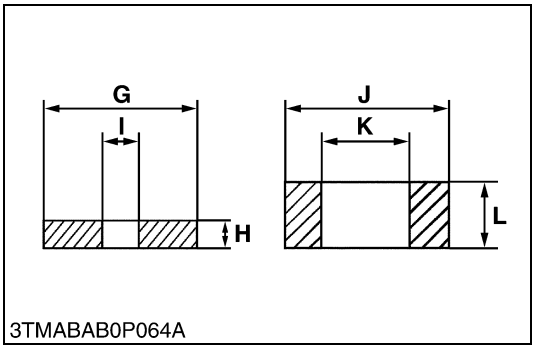

3TMABAB0P064A

Valve Guide Replacing Tool

Application: Use to press out and press fit the valve guide.

A	20 mm dia. (0.79 in. dia.)
B	11.7 to 11.9 mm dia. (0.460 to 0.468 in. dia.)
C	6.5 to 6.6 mm dia. (0.256 to 0.259 in. dia.)
D	225 mm (8.86 in.)
E	70 mm (2.76 in.)
F	45 mm (1.77 in.)
G	25 mm (0.98 in.)
H	5 mm (0.197 in.)
I	6.7 to 7.0 mm dia. (0.263 to 0.275 in. dia.)
J	20 mm dia. (0.787 in. dia.)
K	12.5 to 12.8 mm dia. (0.492 to 0.504 in. dia.)
L	8.9 to 9.1 mm (0.350 to 358 in.)
C1	Chamfer 1.0 mm (0.039 in.)
C2	Chamfer 2.0 mm (0.079 in.)
C0.3	Chamfer 0.3 mm (0.012 in.)

W10250170

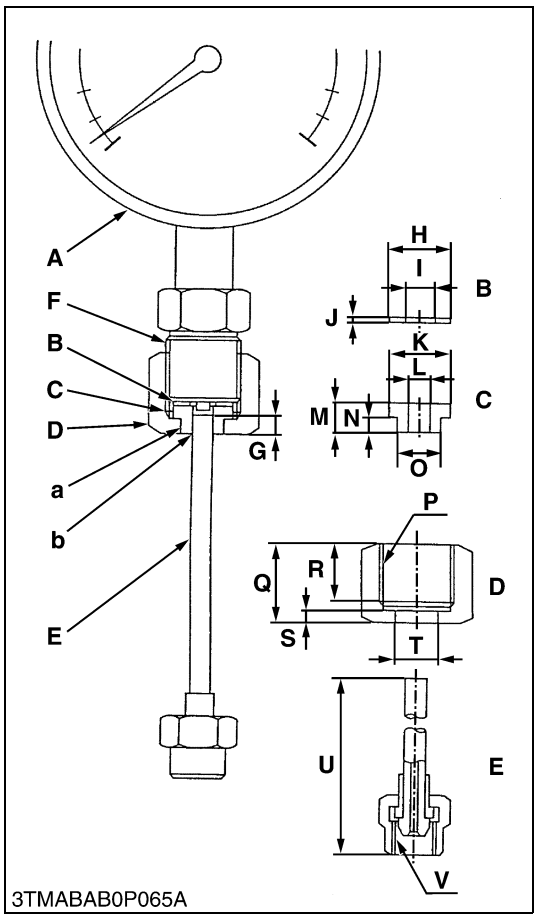

3TMABAB0P065A

Injection Pump Pressure Tester

Application: Use to check fuel tightness of injection pumps.

A	Pressure gauge full scale : More than 29.4 MPa (300 kgf/cm^2, 4267 psi)
B	Copper gasket
C	Flange (Material : Steel)
D	Hex. nut 27 mm (1.06 in.) across the plat
E	Injection pipe
F	PF 1/2
G	5 mm (0.20 in.)
H	17 mm dia. (0.67 in. dia.)
I	8 mm dia. (0.31 in. dia.)
J	1.0 mm (0.039 in.)
K	17 mm dia. (0.67 in. dia.)
L	6.10 to 6.20 mm dia. (0.2402 to 0.2441 in. dia.)
M	8 mm (0.31 in.)
N	4 mm (0.16 in.)
O	11.97 to 11.99 mm dia. (0.4713 to 0.4721 in. dia.)
P	PF 1/2
Q	23 mm (0.91 in.)
R	17 mm (0.67 in.)
S	4 mm (0.16 in.)
T	12.00 to 12.02 mm dia. (0.4724 to 0.4732 in. dia.)
U	100 mm (3.94 in.)
V	M12 × P1.5
a	Adhesive application
b	Fillet welding on the enter circumference

W10252400

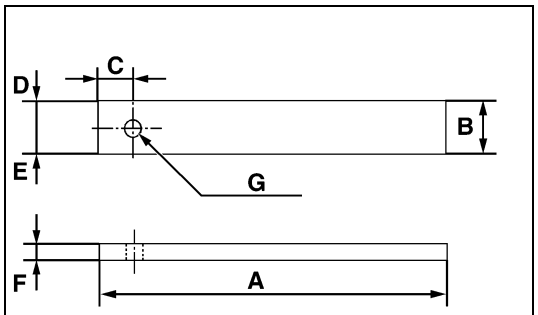

3TMABAB0P067A

Flywheel Stopper

Application: Use to loosen and tighten the flywheel screw.

A	200 mm (7.87 in.)
B	30 mm (1.18 in.)
C	20 mm (0.79 in.)
D	15 mm (0.59 in.)
E	15 mm (0.59 in.)
F	8 mm (0.31 in.)
G	10 mm dia. (0.39 in. dia.)

W10259480

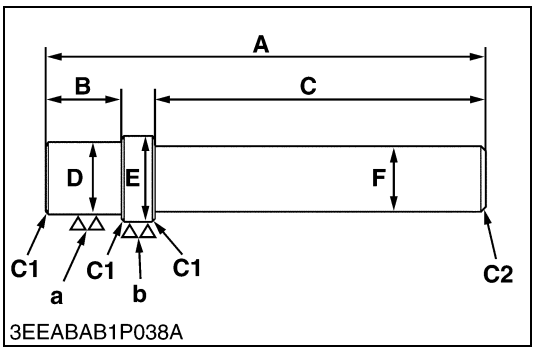

Bushing Replacing Tool

Application: Use to press out and press fit the bushing.

1. For small end bushing

A	157 mm (6.1811 in.)
B	24 mm (0.9449 in.)
C	120 mm (4.7244 in.)
D	21.8 to 21.9 mm dia. (0.8583 to 0.8622 in. dia.)
E	24.8 to 24.9 mm dia. (0.9764 to 0.9803 in. dia.)
F	20 mm dia. (0.7874 in. dia.)
a	6.3 µm (250 µin.)
b	6.3 µm (250 µin.)

2. For idle gear bushing

A	196 mm (7.7165 in.)
B	26 mm (1.0236 in.)
C	150 mm (5.9055 in.)
D	25.8 to 25.9 mm dia. (1.0157 to 1.0197 in. dia.)
E	28.8 to 28.9 mm dia. (1.1339 to 1.1378 in. dia.)
F	20 mm dia. (0.7874 in. dia.)
a	6.3 µm (250 µin.)
b	6.3 µm (250 µin.)

W12358870

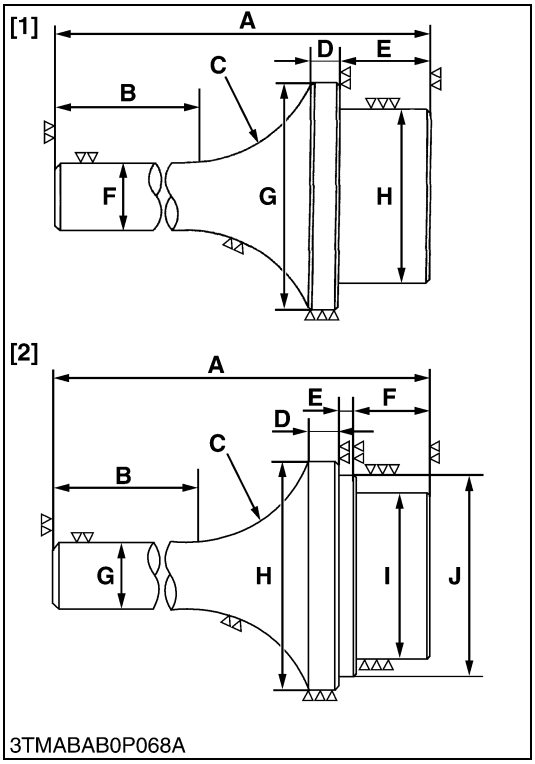

Crankshaft Bearing 1 Replacing Tool

Application: Use to press out and press fit the crankshaft bearing 1.

1. Extracting tool

A	135 mm (5.31 in.)
B	72 mm (2.83 in.)
C	R40 mm (R1.57 in.)
D	10 mm (0.39 in.)
E	20 mm (0.79 in.)
F	20 mm dia. (0.79 in. dia.)
G	56.8 to 56.9 mm dia. (2.236 to 2.240 in. dia.)
H	51.8 to 51.9 mm dia. (2.039 to 2.043 in. dia.)

2. Inserting tool

A	130 mm (5.12 in.)
B	72 mm (2.83 in.)
C	R40 mm (R1.57 in.)
D	9 mm (0.35 in.)
E	4 mm (0.16 in.)
F	24 mm (0.95 in.)
G	20 mm dia. (0.79 in. dia.)
H	68 mm dia. (2.68 in. dia.)
I	51.8 to 51.9 mm dia. (2.039 to 2.043 in. dia.)
J	56.8 to 56.9 mm dia. (2.236 to 2.240 in. dia.)

W10261390

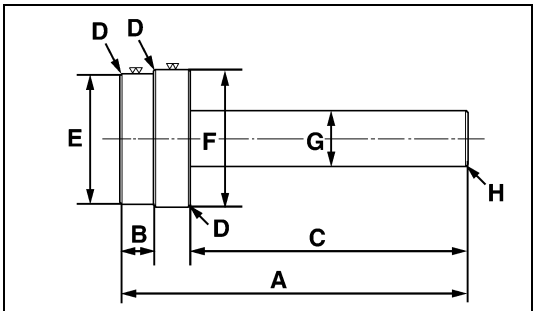

3TAAAAB0P030A

Governor Gear Holder Bushing Replacing Tool

Application: Use to press out and to press fit the governor gear holder bushing.

A	188 mm (7.4 in.)
B	18 mm (0.7 in.)
C	150 mm (5.9 in.)
D	C1 : Chamfer 1.0 mm (0.039 in.)
E	73.9 to 74.0 mm dia. (29.09 to 29.13 in. dia.)
F	69.8 to 69.9 mm dia. (2.748 to 2.751 in. dia.)
G	30 mm dia. (1.181 in. dia.)
H	C2 : chamfer 2.0 mm (0.079 in.)

W10331290

[2] SPECIAL TOOLS FOR TRACTOR

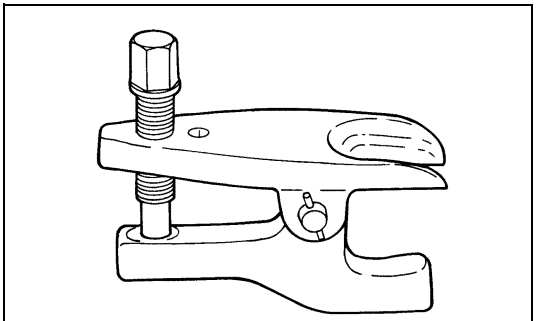
3TMABAB0P071A

Tie-rod End Lifter

Code No: 07909-39051

Application: Use for removing the tie-rod end with ease.

W10264720

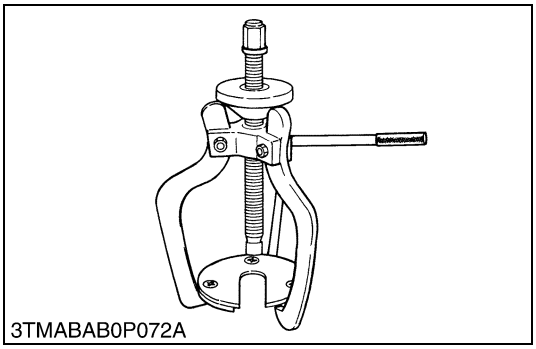
3TMABAB0P072A

Steering Wheel Puller

Code No: 07916-51090

Application: Use for removing the steering wheel without damaging the steering shaft.

W10265330

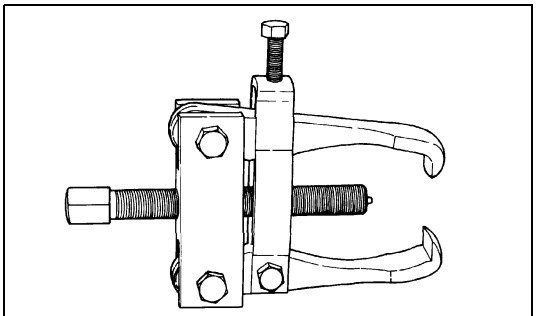
3TBAAAD0P050A

Pitman Arm Puller

Code No: 07916-39011

Application: Use for pulling out pitman arm from tractor.

W10265850

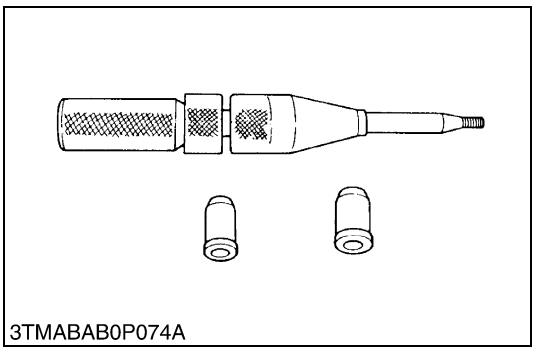
3TMABAB0P074A

Clutch Center Tool (For B and L Series Tractors)

Application: The clutch center tool can be used for all **B** and **L** series tractors with a diaphragm clutch by changing tip guides. Center piece diameter is 20 mm (0.79 in.).

W10266370

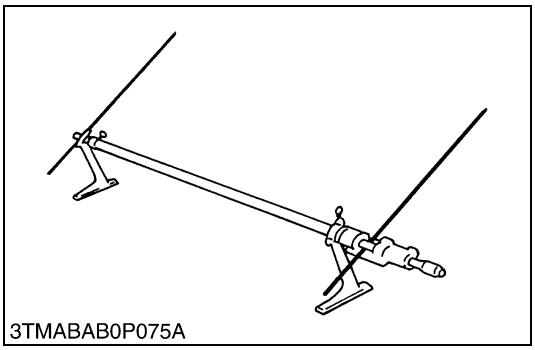
3TMABAB0P075A

Toe-in Gauge

Code No: 07909-31681

Application: This allows easy measurement of toe-in for all machine models.

W10266890

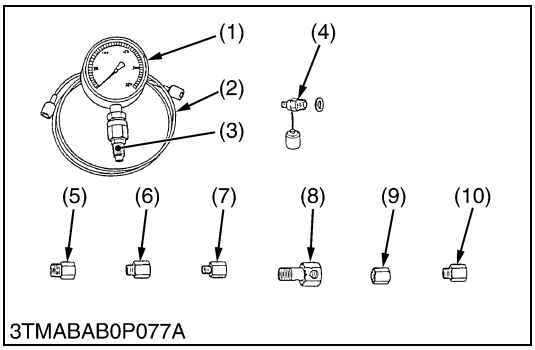

3TMABAB0P077A

Relief Valve Pressure Tester

Code No: 07916-50045

Application: This allows easy measurement of relief set pressure.

(1) Gauge (07916-50322)
(2) Cable (07916-50331)
(3) Threaded Joint (07916-50401)
(4) Threaded Joint (07916-50341)
(5) Adaptor **B** (M18 × P1.5) (07916-50361)
(6) Adaptor **C** (PS3/8) (07916-50371)
(7) Adaptor **D** (PT1/8) (07916-50381)
(8) Adaptor **E** (PS3/8) (07916-50392)
(9) Adaptor **F** (PF1/2) (07916-62601)
(10) Adaptor **58** (PT1/4) (07916-52391)

W10267410

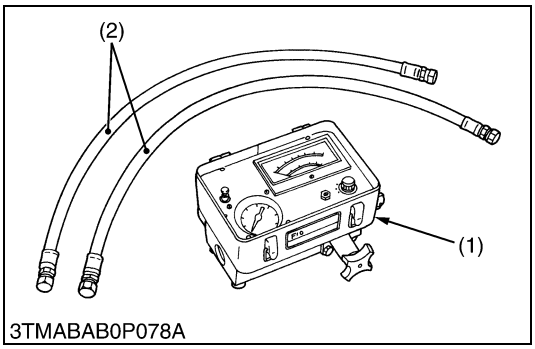

3TMABAB0P078A

Flow Meter

Code No: 07916-52791 (Flow Meter)
07916-52651 (Hydraulic Test Hose)

Application: This allows easy testing of hydraulic system.

(1) Flow Meter
(2) Hydraulic Test Hose

W10313180

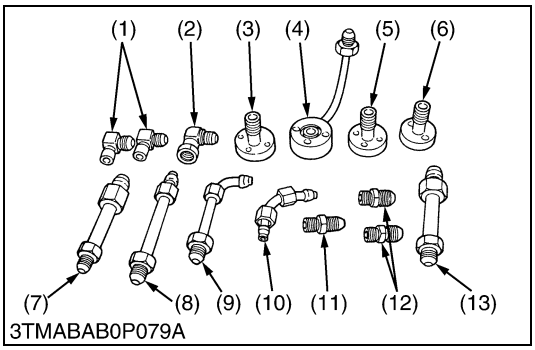

3TMABAB0P079A

Adaptor Set for Flow Meter

Code No: 07916-54031

Application: Use for testing the hydraulic system.

(1) Adaptor **52**
(2) Adaptor **53**
(3) Adaptor **54**
(4) Adaptor **61**
(5) Adaptor **62**
(6) Adaptor **63**
(7) Adaptor **64**
(8) Adaptor **65**
(9) Adaptor **66**
(10) Adaptor **67**
(11) Adaptor **68**
(12) Adaptor **69**
(13) Hydraulic Adaptor **1**

W10313960

■ **NOTE**

- **The following special tools are not provided, so make them referring to the figure.**

HST Adaptor (A)

Application: Use for checking the charge relief valve setting pressure and high pressure relief valve setting pressure.

■ **NOTE**

- **When using, attach with following parts.**
  O-ring : 04811-06170
  Backup ring : 66363-39631

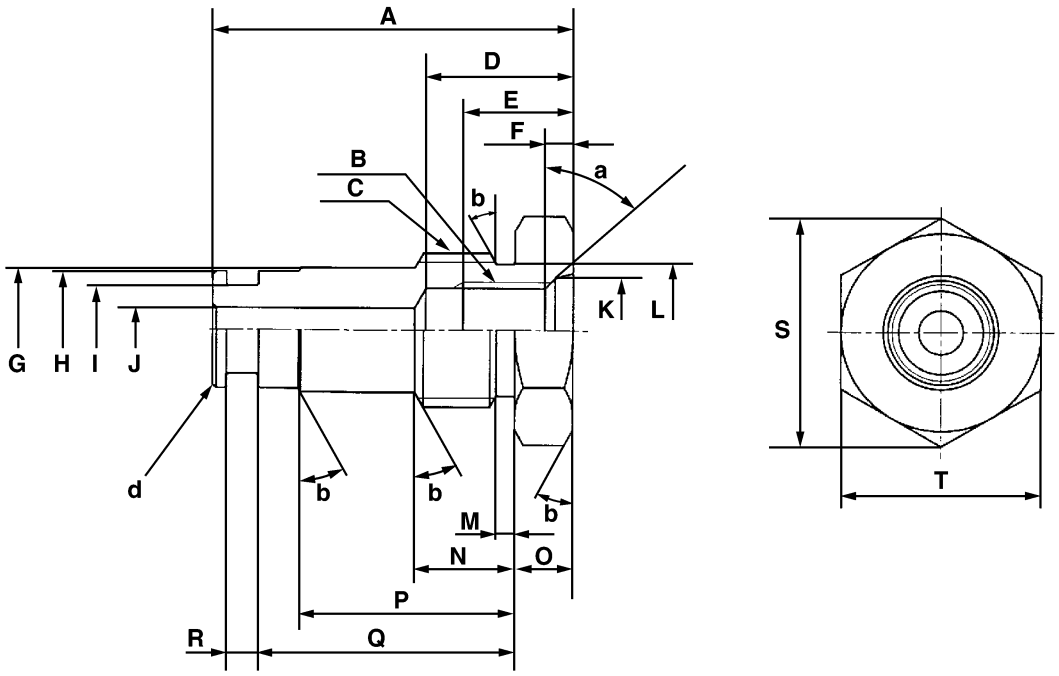

3TBAAAD0P044A

A	49 mm (1.93 in.)	M	2.5 to 2.9 mm (0.10 to 0.11 in.)
B	G 1/4	N	13.5 mm (0.53 in.)
C	G 1/2	O	8 mm (0.31 in.)
D	20 mm (0.79 in.)	P	29 mm (1.14 in.)
E	15 mm (0.59 in.)	Q	34.7 mm (1.37 in.)
F	2.5 to 2.9 mm (0.10 to 0.11 in.)	R	4.4 to 4.65 mm (0.17 to 0.18 in.)
G	17 mm dia. (0.67 in. dia.)	S	31.2 mm (1.23 in.)
H	16 mm dia. (0.63 in. dia.)	T	27 mm (1.06 in.)
I	12 mm dia. (0.47 in. dia.)	a	0.79 rad. (45 °)
J	6 mm dia. (0.24 in. dia.)	b	0.52 rad. (30 °)
K	15.6 mm dia. (0.61 in. dia.)	d	C0.5 : Chamfer 0.5 mm (0.02 in.)
L	18 mm dia. (0.71 in. dia.)		

PS Plug Wrench

Application: Use for tighten the plug for ball nut assembling.

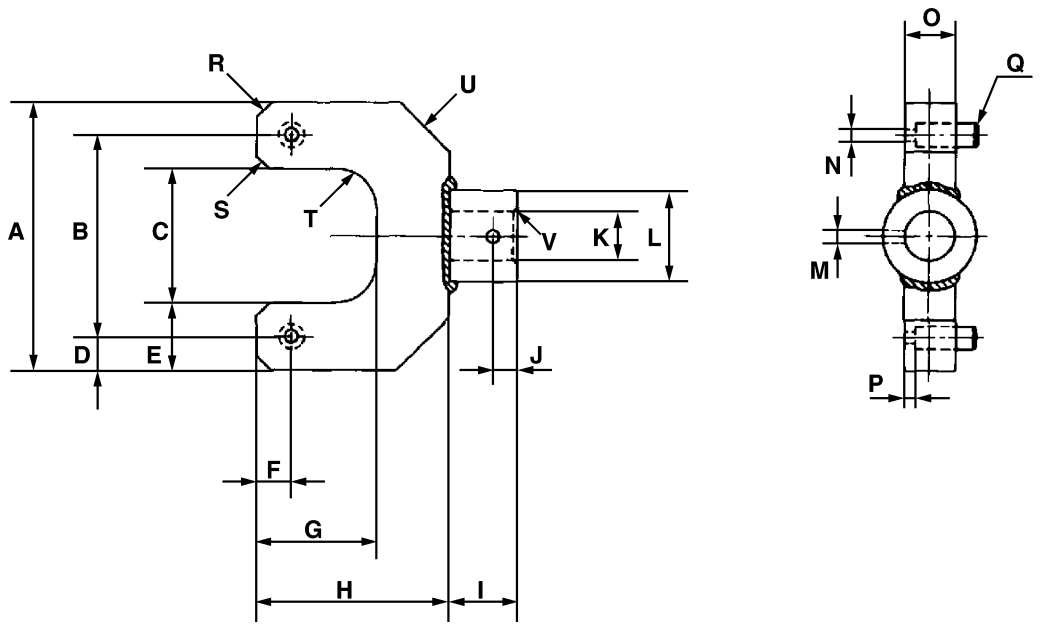

3TBAAAD0P045A

A	64 mm (2.51 in.)	L	22.0 mm dia. (0.87 in. dia.)
B	48 mm (1.89 in.)	M	3.2 mm dia. (0.13 in. dia.)
C	36.2 to 36.3 mm (1.425 to 1.429 in.)	N	3 mm dia. (0.12 in. dia.)
D	8 mm (0.31 in.)	O	12 mm (0.47 in.)
E	13 mm (0.55 in.)	P	3 mm (0.12 in.)
F	8 mm (0.31 in.)	Q	Pin : 6 mm dia. × 15 mm length (0.24 in. dia. × 0.59 in. length)
G	33 mm (1.30 in.)	R	C3 : Chamfer 3 mm (0.12 in.)
H	45 mm (1.77 in.)	S	C3 : Chamfer 3 mm (0.12 in.)
I	16 mm (0.63 in.)	T	R10 : 10 mm radius (0.39 in. radius)
J	6 mm (0.24 in.)	U	C12 : Chamfer 12 mm (0.47 in.)
K	12.0 to 12.1 mm dia. (0.472 to 0.476 in. dia.)	V	C1 : Chamfer 1 mm (0.04 in.)

10. TIRES

[1] TIRE PRESSURE

CAUTION

- **Do not attempt to mount a tire. This should be done by a qualified person with the proper equipment.**
- **Always maintain the correct tire pressure.**
  Do not inflate tires above the recommended pressure as shown below.

■ **IMPORTANT**

- **Do not use tires larger than specified.**
- **When you intend to mount different size of tires from equipped ones, consult your distributor about front drive gear ratio for detail.**
  Excessive wear of tires may occur due to improper gear ratio.

Type		Tractor model	Tire sizes	Inflation pressure
Farm	Front	B1710	6 – 12B, 4PR	200 kPa 2.0 kgf/cm^2 28 psi
		B2110	6 – 12, 4PR	
		B2410	6.00 – 12, 4PR	180 kPa 1.8 kgf/cm^2 26 psi
		B2710	7 – 12, 4PR	170 kPa 1.7 kgf/cm^2 24 psi
	Rear	B1710	8 – 16, 4PR	160 kPa 1.6 kgf/cm^2 23 psi
		B2110	9.5 – 16, 4PR	140 kPa 1.4 kgf/cm^2 20 psi
		B2410	9.5 – 18, 4PR	
		B2710	12.4 – 16, 4PR	110 kPa 1.1 kgf/cm^2 16 psi
Turf	Front	B1710 B2110	22 × 8.50 – 12, 4PR	160 kPa 1.6 kgf/cm^2 23 psi
		B2410	24 × 8.50 – 12, 4PR	
		B2710	23 × 8.50 – 12, 4PR	150 kPa 1.5 kgf/cm^2 22 psi
	Rear	B1710 B2110	31 × 13.5 – 15, 4PR	140 kPa 1.4 kgf/cm^2 20 psi
		B2410	315 / 75D – 15, 4PR	100 kPa 1.0 kgf/cm^2 14 psi
		B2710	13.6 – 16, 4PR	

Though the tire pressure is factory-set to the prescribed level, it naturally drops slowly in the course of time. Thus, check it everyday and inflate as necessary.

[2] TREAD

CAUTION

- **Support tractor securely on stands before removing a wheel.**
- **Never operate tractor with a loose rim, wheel or axle.**

■ **IMPORTANT**

- **Always attach tires as shown in the figure.**
- **If not attached as the figure, transmission parts may be damaged.**
- **Do not use tires larger than specified.**

(1) Front Wheels

Front wheel tread cannot be adjusted.

■ **IMPORTANT**

- **Do not turn front discs to obtain wider tread. In setting up the front wheels, make sure that the inflation valve stem of the tires face outward.**

Models	B1710	B2110	B2410	B1710 / B2110	B2410
Tires	6 – 12 Farm	6 – 12 Farm	6.00 – 12 Farm	22 × 8.50 – 12 Turf	24 × 8.50 – 12 Turf
Tread	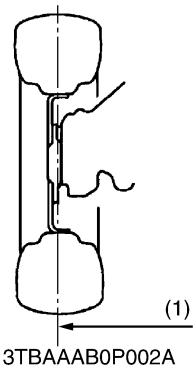 3TBAAAB0P002A			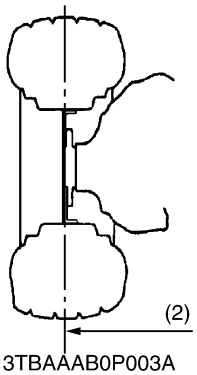 3TBAAAB0P003A	

Models	B2710	B2710
Tires	7 – 12 Farm	23 × 8.50 – 12 Turf
Tread	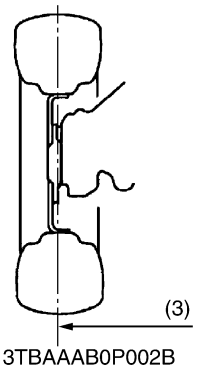 3TBAAAB0P002B	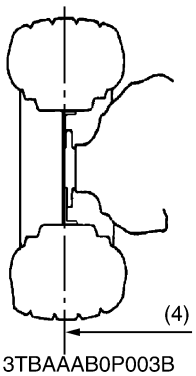 3TBAAAB0P003B

(1) 830 mm (32.7 in.) (2) 870 mm (34.3 in.) (3) 935 mm (36.8 in.) (4) 970 mm (38.2 in.)

(2) Rear Tread

(A) B1710, B2110, B2410

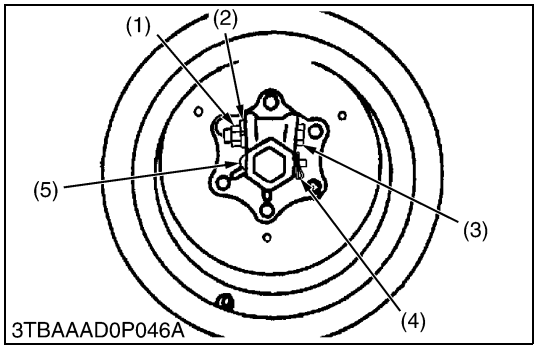

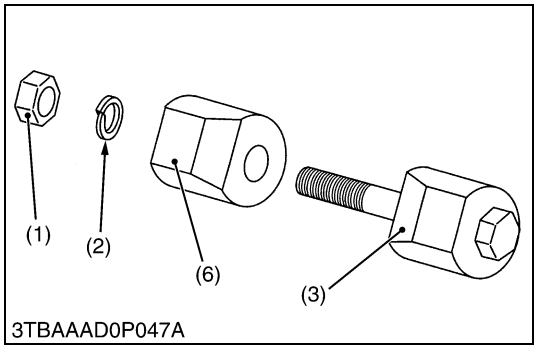

Rear tread can be adjusted in 2 or 3 steps depending on the model. To change the tread.

1. Loosen the nut (1) of cotter pin bolt.
2. Remove the snap pin (4) and wheel hub pin (5).
3. Change the tread to desired position.
4. Re-set the wheel hub pin, snap pin and cotter pin bolt.

■ **IMPORTANT**

- **When re-filling or adjusting a wheel, tighten the bolts to the following torques then recheck after driving the tractor 200 m (200 yards) and there after daily check service.**
- Remove the wheel hub and reinstall it on the other side of the wheel disk, then set the wheel as shown.

Tightening torque	Cotter setting bolt and nut	123 to 147 N·m 12.6 to 15.0 kgf·m 91.1 to 108.5 ft-lbs
	Wheel hub mounting nut	108 to 125 N·m 11.0 to 12.8 kgf·m 79.6 to 92.6 ft-lbs

(1) Nut
(2) Spring Washer
(3) Bolt with Cotter
(4) Snap Pin
(5) Wheel Hub Pin
(6) Cotter

W10358430

Models	B1710	B2110	B2410	B1710 / B2110	B2410
Tires	8 – 16 Farm	9.5 – 16 Farm	9.5 – 18 Farm	31 × 13.5 – 15 Turf	315 / 75D – 15 Turf
Tread	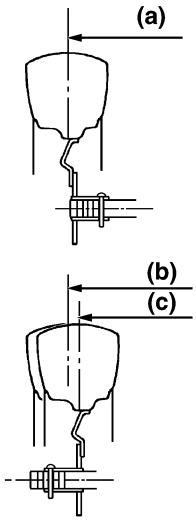	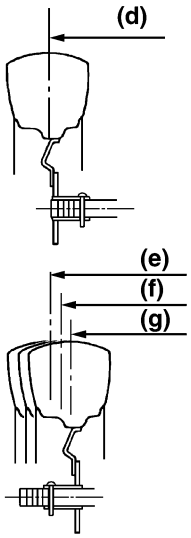	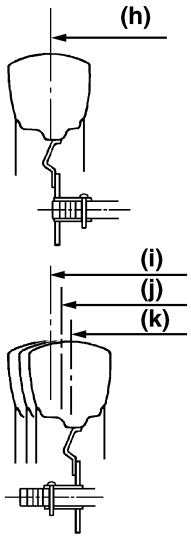	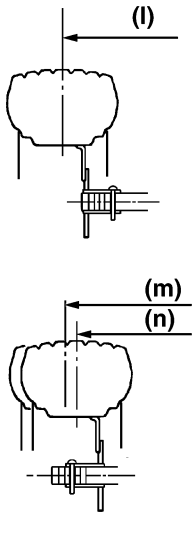	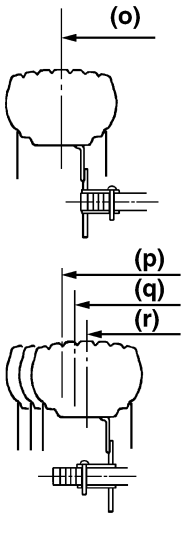

(a) 910 mm (35.8 in.)
(b) 790 mm (31.1 in.)
(c) 740 mm (29.1 in.)
(d) 1015 mm (40.0 in.)
(e) 895 mm (35.2 in.)
(f) 845 mm (33.3 in.)
(g) 795 mm (31.3 in.)
(h) 1035 mm (40.7 in.)
(i) 910 mm (35.8 in.)
(j) 860 mm (33.9 in.)
(k) 810 mm (31.9 in.)
(l) 1085 mm (31.9 in.)
(m) 965 mm (38.0 in.)
(n) 915 mm (36.0 in.)
(o) 1085 mm (42.7 in.)
(p) 965 mm (38.0 in.)
(q) 915 mm (36.0 in.)
(r) 865 mm (34.1 in.)

(B) B2710

Rear tread of this model can not be adjusted.

Models	B2710	B2710
Tires	12.4 – 16 Farm	13.6 – 16 Turf
Tread	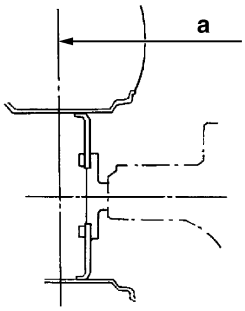 3TBAAAD0P049A	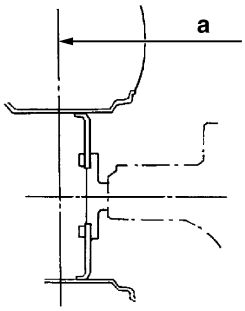 3TBAAAD0P049A

a : 1050 mm (41.3 in.)

[3] TIRE LIQUID INJECTION

Auxiliary weights can be used to increase traction force for plowing in fields or clayey ground.

Another way is to inject water or another liquid, such as a calcium chloride solution in the tires. Water must not be used in winter since it freezes at 0 °C (32 °F). The calcium chloride solution will not freeze and moreover, affords higher effect than water since its specific gravity is higher than that of water by about 20 %. Below is an explanation of calcium chloride solution injection.

■ **IMPORTANT**

- **Do not fill the front tires with liquid.**

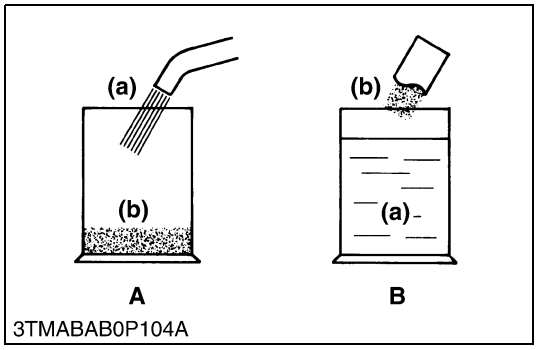

Preparation of Calcium Chloride Solution

CAUTION

- **When making a calcium chloride solution, do not pour water over calcium chloride since this results in chemical reaction which will cause high temperature. Instead add a small amount of calcium chloride to the water at a time until the desired solution is achieved.**

Freezing temp.	Weight of $CaCl_2$ to be dissolved in 100 L (26.5 U.S.gals., 22.0 Imp.gals.) of water
–5 °C (23 °F)	12 kg (26.4 lbs)
–10 °C (14 °F)	21 kg (46.3 lbs)
–15 °C (5 °F)	28 kg (61.7 lbs)
–20 °C (–4 °F)	34 kg (75.0 lbs)
–25 °C (–13 °F)	40 kg (88.2 lbs)
–30 °C (–22 °F)	44 kg (97.0 lbs)
–35 °C (–31 °F)	49 kg (108 lbs)
–40 °C (–40 °F)	52 kg (114.6 lbs)
–45 °C (–49 °F)	56 kg (123.5 lbs)
–50 °C (–58 °F)	61 kg (134.5 lbs)

(a) Water **(b) $CaCl_2$ (Calcium Chloride)**

W10330830

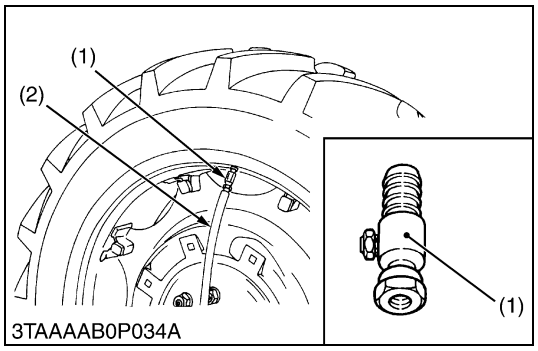

Attaching Injector

1. Lift the rear tires off the ground.
2. Turn the tire so that the air valve is at the top.
3. Remove the air valve, and attach the injector. (Code No. 07916-52511)

(1) Injector (2) Hose

W10333310

Fig. 1

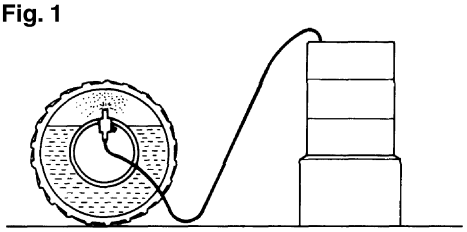

Fig. 2

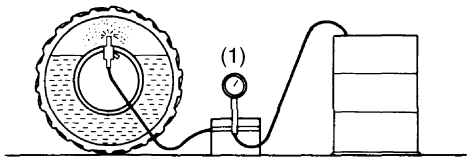

Fig. 3

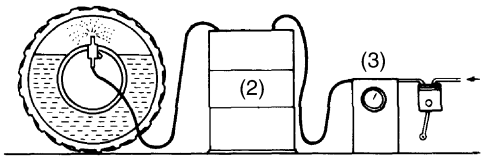

3TMABAB0P111A

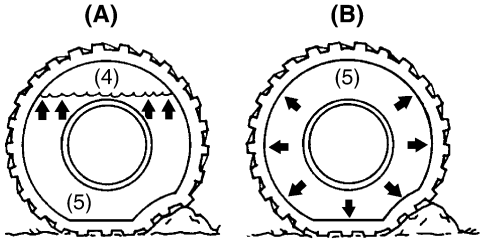

3TMABAB0P107A

Injection

CAUTION

- **When a calcium chloride solution is used, cool it before pouring it into the tire.**
- **Do not fill tires with water or solution more than 75 % of full capacity (to the valve stem level).**

The following four ways can be used to inject water or a calcium chloride solution into tires.

1. Gravity injection (Fig. 1)
2. Pump injection (Fig. 2)
3. Pressure tank injection (Fig. 3)
4. Injection directly from tap (only when water is being used).

■ **NOTE**

- **Once injection is completed, reset the air valve, and pump air into the tire to the specified pressure.**

Weight of Calcium Chloride Solution Filling 75 % of Full Capacity of a Tire

Tire sizes	8-16	9.5-16	9.5-18	12.4-16
Slush free at –10 °C (14 °F) Solid at –30 °C (–22 °F) [Approx. 1 kg (2 lbs.) $CaCl_2$ per 4 L (1 gal.) of water]	35 kg (77 lbs)	54 kg (119 lbs)	70 kg (155 lbs)	85 kg (187 lbs)
Slush free at –24 °C (–11 °F) Solid at –47 °C (–53 °F) [Approx. 1.5 kg (3.5 lbs.) $CaCl_2$ per 4 L (1 gal.) of water]	37 kg (81 lbs)	57 kg (126 lbs)	74 kg (163 lbs)	89 kg (196 lbs)
Slush free at –47 °C (–53 °F) Solid at –52 °C (–62 °F) [Approx. 2.25 kg (5 lbs.) $CaCl_2$ per 4 L (1 gal.) of water]	39 kg (86 lbs)	60 kg (132 lbs)	78 kg (172 lbs)	94 kg (207 lbs)

(1) Pump
(2) Pressure Tank
(3) Compressor
(4) Air
(5) Water

(A) Correct : 75 % Air Compresses Like A Cushion
(B) Incorrect : 100 % Full Water Can Not Be Compressed

W10334350

1 ENGINE

NOTICE

Regarding engine mechanism information, please refer ENGINE MECHANISM WSM (Code No. 97897-01871).

SERVICING

CONTENTS

1. TROUBLESHOOTING 1-S1
2. SERVICING SPECIFICATIONS 1-S4
3. TIGHTENING TORQUES 1-S10
4. CHECKING, DISASSEMBLING AND SERVICING 1-S11
   [1] SEPARATE ENGINE 1-S11
   [2] ENGINE BODY 1-S17
      (1) Checking and Adjusting 1-S17
      (2) Disassembling and Assembling 1-S19
      (3) Servicing 1-S32
   [3] LUBRICATING SYSTEM 1-S50
      (1) Checking 1-S50
      (2) Servicing 1-S50
   [4] COOLING SYSTEM 1-S51
      (1) Checking and Adjusting 1-S51
      (2) Disassembling and Assembling 1-S52
      (3) Servicing 1-S53
   [5] FUEL SYSTEM 1-S54
      (1) Checking and Adjusting 1-S54
      (2) Disassembling and Assembling 1-S57

1. TROUBLESHOOTING

Symptom	Probable Cause	Solution	Reference Page
Engine Does Not Start	• No fuel	Replenish fuel	–
	• Air in the fuel system	Bleed	G-29
	• Water in the fuel system	Change fuel and repair or replace fuel system	–
	• Fuel pipe clogged	Clean	–
	• Fuel filter clogged	Change	G-20
	• Excessively high viscosity of fuel or engine oil at low temperature	Use specified fuel or engine oil	G-8
	• Fuel with low cetane number	Use specified fuel	G-8
	• Fuel leak due to loose injection pipe retaining nut	Tighten retaining nut	1-S19
	• Incorrect injection timing	Adjust	1-S54
	• Fuel camshaft worn	Replace	1-S24
	• Injection nozzle clogged	Clean	1-S57
	• Injection pump malfunctioning	Repair or replace	1-S24
	• Seizure of crankshaft, camshaft, piston, cylinder or bearing	Repair or replace	1-S26, S28, S31
	• Compression leak from cylinder	Replace head gasket, tighten cylinder head screw, glow plug and nozzle holder	1-S19, S21
	• Improper valve timing	Correct or replace timing gear	1-S26
	• Piston ring and cylinder worn	Replace	1-S29
	• Excessive valve clearance	Adjust	1-S18
	• Battery discharged	Charge	G-19
(Starter Does Not Run)	• Starter malfunctioning	Repair or replace	9-S14
	• Main switch malfunctioning	Repair or replace	9-S8
	• Safety switches malfunctioning	Adjust or replace	9-S12
	• Wiring disconnected	Connect	–
Engine Revolution Is Not Smooth	• Fuel filter clogged or dirty	Change	G-20
	• Air cleaner clogged	Clean or replace	G-18
	• Fuel leak due to loose injection pipe retaining nut	Tighten retaining nut	1-S19
	• Injection pump malfunctioning	Repair or replace	1-S24
	• Incorrect nozzle injection pressure	Adjust	1-S56
	• Injection nozzle stuck or clogged	Repair or replace	1-S19, S57
	• Governor malfunctioning	Repair	1-S26
Either White or Blue Exhaust Gas Is Observed	• Excessive engine oil	Reduce to specified level	G-12
	• Piston ring and cylinder worn or stuck	Repair or replace	1-S29
	• Incorrect injection timing	Adjust	1-S54
	• Deficient compression	Adjust	1-S17

W10143220

Symptom	Probable Cause	Solution	Reference Page
Either Black or Dark Gray Exhaust Gas Is Observed	• Overload • Low grade fuel used • Fuel filter clogged • Air cleaner clogged • Deficient nozzle injection	Lesson load Use specified fuel Replace Clean or replace Repair or replace nozzle	– G-8 G-20 G-18 1-S57
Deficient Output	• Incorrect injection timing • Engine's moving parts seem to be seizing • Uneven fuel injection • Deficient nozzle injection • Compression leak	Adjust Repair or replace Repair or replace injection pump Repair or replace nozzle Replace head gasket, tighten cylinder head screw, glow plug and nozzle holder	1-S54 – 1-S24 1-S57 1-S19, S21
Excessive Lubricant Oil Consumption	• Piston ring's gap facing the same direction • Oil ring worn or stuck • Piston ring groove worn • Valve stem and valve guide worn • Oil leaking due to defective seals or packing	Shift ring gap direction Replace Replace piston Replace Replace	1-S29 1-S29 1-S29 1-S33 –
Fuel Mixed into Lubricant Oil	• Injection pump's plunger worn • Deficient nozzle injection • Injection pump broken	Replace pump element or injection pump Repair or replace nozzle Replace	1-S24 1-S57 1-S24
Water Mixed into Lubricant Oil	• Head gasket defective • Cylinder block or cylinder head flawed	Replace Replace	1-S21 1-S21
Low Oil Pressure	• Engine oil insufficient • Oil strainer clogged • Oil filter clogged • Relief valve stuck with dirt • Relief valve spring weaken or broken • Excessive oil clearance of crankshaft bearing • Excessive oil clearance of crankpin bearing • Excessive oil clearance of rocker arm • Oil passage clogged • Different type of oil • Oil pump defective	Replenish Clean Replace Clean Replace Replace Replace Replace Clean Use specified type of oil Repair or replace	G-12 1-S27 G-20 – – 1-S31 1-S31 1-S20 – G-8 1-S50
High Oil Pressure	• Different type of oil • Relief valve defective	Use specified type of oil Replace	G-8 –

W10143220

Symptom	Probable Cause	Solution	Reference Page
Engine Overheated	• Engine oil insufficient	Replenish	G-12
	• Fan belt broken or tensioned improperly	Replace or adjust	G-20, 1-S19
	• Coolant insufficient	Replenish	G-8
	• Radiator net and radiator fin clogged with dust	Clean	–
	• Inside of radiator corroded	Clean or replace	–
	• Coolant flow route corroded	Clean or replace	G-27
	• Radiator cap defective	Replace	–
	• Radiator hose damaged	Replace	–
	• Overload running	Lessen load	–
	• Head gasket defective	Replace	1-S21
	• Incorrect injection timing	Adjust	1-S54
	• Unsuitable fuel used	Use specified fuel	G-8

W10143220

2. SERVICING SPECIFICATIONS

ENGINE BODY

Item		Factory Specification	Allowable Limit
Cylinder Head Surface	Flatness	–	0.05 mm 0.0020 in.
Compression Pressure (When Cranking with Starting Motor)		2.84 to 3.24 MPa 29 to 33 kgf/cm^2 412 to 469 psi	2.26 MPa 23 kgf/cm^2 327 psi
Difference among Cylinders		–	10 % or less
Top Clearance		0.55 to 0.70 mm 0.0217 to 0.0276 in.	–
Valve Clearance (When Cold)		0.145 to 0.185 mm 0.00571 to 0.00728 in.	–
Valve Seat	Width (Intake)	2.12 mm 0.0835 in.	–
	Width (Exhaust)	2.12 mm 0.0835 in.	–
Valve Seat	Angle (Intake)	1.047 rad. 60 °	–
	Angle (Exhaust)	0.785 rad. 45 °	–
Valve Face	Angle (Intake)	1.047 rad. 60 °	–
	Angle (Exhaust)	0.785 rad. 45 °	–
Valve Stem to Valve Guide	Clearance	0.035 to 0.065 mm 0.00138 to 0.00256 in.	0.10 mm 0.0039 in.
Valve Stem	O.D.	6.960 to 6.975 mm 0.27402 to 0.27461 in.	–
Valve Guide	I.D.	7.010 to 7.025 mm 0.27598 to 0.27657 in.	–
Valve Recessing	Protrusion	0.05 mm 0.0020 in.	–
	Recessing	0.15 mm 0.0059 in.	0.40 mm 0.0157 in.
Rocker Arm Shaft to Rocker Arm	Clearance	0.016 to 0.045 mm 0.00063 to 0.00177 in.	0.10 mm 0.0039 in.
Rocker Arm Shaft	O.D.	11.973 to 11.984 mm 0.47138 to 0.47181 in.	–
Rocker Arm	I.D.	12.000 to 12.018 mm 0.47244 to 0.47315 in.	–

W10138740

ENGINE BODY (Continued)

Item		Factory Specification	Allowable Limit
Valve Timing (Intake Valve)	Open	0.24 rad. (14 °) before T.D.C.	–
	Close	0.52 rad. (30 °) after B.D.C.	–
Valve Timing (Exhaust Valve)	Open	0.96 rad. (55 °) before B.D.C.	–
	Close	0.24 rad. (14 °) after T.D.C.	–
Valve Spring	Free Length	37.0 to 37.5 mm 1.457 to 1.476 in.	36.5 mm 1.437 in.
	Setting Load	117.6 N 12.0 kgf 26.4 lbs	100.0 N 10.2 kgf 22.5 lbs
	Setting Length	31.0 mm 1.220 in.	–
	Tilt	–	1.0 mm 0.039 in.
Push Rod	Alignment	–	0.25 mm 0.0098 in.
Tappet to Tappet Guide	Clearance	0.020 to 0.062 mm 0.00079 to 0.00244 in.	0.07 mm 0.0028 in.
Tappet	O.D.	19.959 to 19.980 mm 0.78579 to 0.78661 in.	–
Tappet Guide	I.D.	20.000 to 20.021 mm 0.78740 to 0.78823 in.	–
Timing Gear (D905, D1005, D1105) Crank Gear to Idle Gear	Backlash	0.032 to 0.115 mm 0.00126 to 0.00453 in.	0.15 mm 0.0059 in.
Idle Gear to Cam Gear	Backlash	0.036 to 0.114 mm 0.00142 to 0.00449 in.	0.15 mm 0.0059 in.
Idle Gear to Injection Pump Gear	Backlash	0.034 to 0.116 mm 0.00134 to 0.00457 in.	0.15 mm 0.0059 in.
Injection Pump Gear to Governor Gear	Backlash	0.030 to 0.117 mm 0.00118 to 0.00461 in.	0.15 mm 0.0059 in.

W10138740

ENGINE BODY (Continued)

Item		Factory Specification	Allowable Limit
Timing Gear (V1305)			
Crank Gear to Idle Gear 1	Backlash	0.032 to 0.115 mm 0.00126 to 0.00453 in.	0.15 mm 0.0059 in.
Idle Gear 1 to Cam Gear	Backlash	0.036 to 0.114 mm 0.00142 to 0.00449 in.	0.15 mm 0.0059 in.
Idle Gear 1 to Injection Pump Gear	Backlash	0.034 to 0.116 mm 0.00134 to 0.00457 in.	0.15 mm 0.0059 in.
Idle Gear 1 to Idle Gear 2	Backlash	0.033 to 0.117 mm 0.00130 to 0.00461 in.	0.15 mm 0.0059 in.
Idle Gear 2 to Governor Gear	Backlash	0.030 to 0.117 mm 0.00118 to 0.00461 in.	0.15 mm 0.0059 in.
Idle Gear (D905, D1005, D1105)	Side Clearance	0.20 to 0.51 mm 0.0079 to 0.0200 in.	0.8 mm 0.0315 in.
Idle Gear 1 (V1305)	Side Clearance	0.05 to 0.15 mm 0.0020 to 0.0059 in.	–
Idle Gear 2 (V1305)	Side Clearance	0.20 to 0.51 mm 0.0079 to 0.0200 in.	0.9 mm 0.0354 in.
Idle Gear Shaft to Gear Bushing	Clearance	0.020 to 0.054 mm 0.00079 to 0.00213 in.	0.10 mm 0.0039 in.
Idle Gear Shaft	O.D.	25.967 to 25.980 mm 1.02232 to 1.02283 in.	–
Gear Bushing	I.D.	26.000 to 26.021 mm 1.02362 to 1.02445 in.	–
Camshaft	Side Clearance	0.07 to 0.22 mm 0.0028 to 0.0087 in.	0.30 mm 0.0118 in.
Camshaft	Alignment	–	0.01 mm 0.0004 in.
Cam Height	Intake	28.80 mm 1.1339 in.	28.75 mm 1.1319 in.
	Exhaust	29.00 mm 1.1417 in.	28.95 mm 1.1398 in.
Camshaft Journal to Cylinder Block Bore	Oil Clearance	0.050 to 0.091 mm 0.00197 to 0.00358 in.	0.15 mm 0.0059 in.
Camshaft Journal	O.D.	35.934 to 35.950 mm 1.41473 to 1.41535 in.	–
Cylinder Block Bore	I.D.	36.000 to 36.025 mm 1.41732 to 1.41830 in.	–
Piston Pin Bore	I.D.	22.000 to 22.013 mm 0.86614 to 0.86665 in.	22.05 mm 0.8681 in.

W10138740

ENGINE BODY (Continued)

Item		Factory Specification	Allowable Limit
Second Ring to Ring Groove	Clearance (D905, D1005, V1305) (D1105)	0.085 to 0.112 mm 0.00335 to 0.00441 in. 0.095 to 0.112 mm 0.00374 to 0.00441 in.	0.20 mm 0.0079 in. 0.20 mm 0.0079 in.
Oil Ring to Ring Groove	Clearance	0.020 to 0.055 mm 0.00079 to 0.00217 in.	0.15 mm 0.0059 in.
Top Ring and Second Ring	Ring Gap (D905, D1005, V1305) (D1105)	0.25 to 0.40 mm 0.0098 to 0.0157 in. 0.30 to 0.45 mm 0.0118 to 0.0177 in.	1.25 mm 0.0492 in. 1.25 mm 0.0492 in.
Oil Ring	Ring Gap	0.25 to 0.45 mm 0.0098 to 0.0177 in.	1.25 mm 0.0492 in.
Connecting Rod	Alignment	–	0.05 mm 0.0020 in.
Piston Pin to Small End Bushing	Clearance	0.014 to 0.038 mm 0.00055 to 0.00150 in.	0.15 mm 0.0059 in.
Piston Pin	O.D.	22.002 to 22.011 mm 0.86622 to 0.86657 in.	–
Small End Bushing	I.D.	22.025 to 22.040 mm 0.86713 to 0.86771 in.	–
Crankshaft	Alignment	–	0.02 mm 0.0008 in.
Crankshaft	Side Clearance	0.15 to 0.31 mm 0.0059 to 0.0122 in.	0.50 mm 0.0197 in.
Crankpin to Crankpin Bearing	Oil Clearance	0.029 to 0.091 mm 0.00114 to 0.00358 in.	0.20 mm 0.0079 in.
Crankpin	O.D.	39.959 to 39.975 mm 1.57319 to 1.57382 in.	–
Crankpin Bearing	I.D.	40.004 to 40.050 mm 1.57496 to 1.57677 in.	–
Crankshaft Journal to Crankshaft Bearing 1 (Front Side)	Oil Clearance	0.034 to 0.114 mm 0.00134 to 0.00449 in.	0.20 mm 0.0079 in.
Crankshaft Journal	O.D.	47.934 to 47.950 mm 1.88716 to 1.88779 in.	–
Crankshaft Bearing 1	I.D.	47.984 to 48.048 mm 1.88913 to 1.89165 in.	–
Crankshaft Journal to Crankshaft Bearing 2 (Rear Side)	Oil Clearance	0.034 to 0.095 mm 0.00134 to 0.00374 in.	0.20 mm 0.0079 in.
Crankshaft Journal	O.D.	47.934 to 47.950 mm 1.88716 to 1.88779 in.	–
Crankshaft Bearing 2	I.D.	47.984 to 48.029 mm 1.88913 to 1.89091 in.	–

W10138740

ENGINE BODY (Continued)

Item			Factory Specification	Allowable Limit
Crankshaft Journal to Crankshaft Bearing 3 (Intermediate)		Oil Clearance	0.034 to 0.098 mm 0.00134 to 0.00386 in.	0.20 mm 0.0079 in.
Crankshaft Journal		O.D.	51.921 to 51.940 mm 2.04413 to 2.04488 in.	–
Crankshaft Bearing 3		I.D.	51.974 to 52.019 mm 2.04622 to 2.04799 in.	–
Cylinder [Standard]	D905	I.D.	72.000 to 72.019 mm 2.83464 to 2.83539 in.	72.169 mm 2.84129 in.
	D1005 V1305	I.D.	76.000 to 76.019 mm 2.99212 to 2.99287 in.	76.169 mm 2.99878 in.
	D1105	I.D.	78.000 to 78.019 mm 3.07086 to 3.07161 in.	78.169 mm 3.07751 in.
Cylinder [Oversize : 0.5 mm (0.0197 in.)]	D905	I.D.	72.500 to 72.519 mm 2.85433 to 2.85507 in.	72.669 mm 2.86098 in.
	D1005 V1305	I.D.	76.500 to 76.519 mm 3.01181 to 3.01255 in.	76.669 mm 3.01846 in.
	D1105	I.D.	78.500 to 78.519 mm 3.09055 to 3.09129 in.	78.669 mm 3.09720 in.

W10138740

LUBRICATING SYSTEM

Engine Oil Pressure	At Idle Speed	49 kPa or more 0.5 kgf/cm^2 or more 7 psi or more	–
	At Rated Speed	196 to 441 kPa 2.0 to 4.5 kgf/cm^2 36 to 64 psi	147 kPa 1.5 kgf/cm^2 27 psi
Inner Rotor to Outer Rotor	Clearance	0.06 to 0.18 mm 0.0024 to 0.0071 in.	–
Outer Rotor to Pump Body	Clearance	0.10 to 0.18 mm 0.0039 to 0.0071 in.	–
Rotor to Cover	Clearance	0.030 to 0.085 mm 0.00118 to 0.00335 in.	–

W10139730

COOLING SYSTEM

Fan Belt	Tension	7 to 9 mm (0.28 to 0.35 in.) deflection at 98 N (10 kgf, 22 lbs) of force	–
Radiator	Water Leakage Test Pressure	No leaks at 137 kPa 1.4 kgf/cm^2 20 psi	–

W10135990

COOLING SYSTEM (Continued)

Item		Factory Specification	Allowable Limit
Radiator Cap	Pressure Falling Time	10 seconds or more for pressure falling from 88 to 59 kPa from 0.9 to 0.6 kgf/cm^2 from 13 to 9 psi	–
Thermostat	Valve Opening Temperature (At Beginning)	80.5 to 83.5 °C 176.9 to 182.3 °F	–
	Valve Opening Temperature (Opened Completely)	95 °C 203 °F	–

W10138740

FUEL SYSTEM

Injection Pump	Injection Timing	0.31 to 0.35 rad. 18 to 20° before T.D.C.	–
Pump Element	Fuel Tightness	–	14.7 MPa 150 kgf/cm^2 2133 psi
Delivery Valve	Fuel Tightness	10 seconds or more for pressure falling from 14.7 to 13.7 MPa from 150 to 140 kgf/cm^2 from 2133 to 1990 psi	5 seconds or more for pressure falling from 14.7 to 13.7 MPa from 150 to 140 kgf/cm^2 from 2133 to 1990 psi
Injection Nozzle	Injection Pressure	13.7 to 14.7 MPa 140 to 150 kgf/cm^2 1991 to 2133 psi	–
Injection Nozzle Valve Seat	Valve Seat Tightness	When the pressure is 12.7 MPa (130 kgf/cm^2, 1850 psi), the valve seat must be fuel tightness.	–

W10139730

FRONT AXLE (Bi-Speed Turn Cable)

Bi-speed Turn Cable Outer (Clutch Housing Side)	Distance **A** [B2110, B2410]	18 mm 0.71 in.	–
	[B2710]	16 mm 0.63 in.	–
Bi-speed Turn Cable Inner (Front Axle Case Side)	Distance **B** [B2110, B2410]	10 mm 0.39 in.	–
	[B2710]	8 mm 0.31 in.	–

W10140400

3. TIGHTENING TORQUES

Tightening torques of screws, bolts and nuts on the table below are especially specified.
(For general use screws, bolts and nuts : See page G-9.)

Item	N·m	kgf·m	ft-lbs
Steering wheel mounting nut	29.4 to 49.0	3.0 to 5.0	21.7 to 36.2
Delivery pipe nut for HST	34 to 39	3.5 to 4.0	25.3 to 28.9
Oil cooler pipe nut	50 to 58	5.1 to 5.9	36.9 to 42.8
Delivery pipe nut for power steering	65 to 75	6.6 to 7.2	47.9 to 55.3
Clutch housing and engine mounting screw	17.7 to 20.6	1.8 to 2.1	13.0 to 15.2
Clutch housing and engine mounting nut	48.1 to 55.8	4.9 to 5.7	35.5 to 41.2
Clutch cover mounting screw	23.5 to 27.5	2.4 to 2.8	17.4 to 20.3

W10127360

Item	Size x Pitch	N·m	kgf·m	ft-lbs
Cylinder head cover cap nut	M7 × 1.0	6.9 to 8.8	0.7 to 0.9	5.1 to 6.5
Injection pipe retaining nut	M12 × 1.5	24.5 to 34.3	2.5 to 3.5	18.1 to 25.3
Nozzle holder assembly	M20 × 1.5	49.0 to 68.6	5.0 to 7.0	36.2 to 50.6
Nozzle holder	–	34.3 to 39.2	3.5 to 4.0	25.3 to 28.9
Overflow pipe assembly retaining nut	M12 × 1.5	19.6 to 24.5	2.0 to 2.5	14.5 to 18.1
Glow plug	M8 × 1.0	7.8 to 14.7	0.8 to 1.5	5.8 to 10.8
Bearing nut on idle gear shaft	–	34.3 to 39.2	3.5 to 4.0	25.3 to 28.9
Lock nut for bearing nut	–	24.5 to 34.3	2.5 to 3.5	18.1 to 25.3
* Rocker arm bracket nut	M7 × 1.0	21.6 to 26.5	2.2 to 2.7	15.9 to 19.5
* Cylinder head screw	M10 × 1.25	63.7 to 68.6	6.5 to 7.0	47.0 to 50.6
* Crankshaft screw	M14 × 1.5	235.4 to 245.2	24.0 to 25.0	173.6 to 180.8
* Connecting rod screw	M8 × 1.0	41.2 to 46.1	4.2 to 4.7	30.3 to 33.9
* Flywheel screw	M10 × 1.25	53.9 to 58.8	5.5 to 6.0	39.8 to 43.4
* Main bearing case screw 1	M8 × 1.25	29.4 to 34.3	3.0 to 3.5	21.7 to 25.3
* Main bearing case screw 2	M9 × 1.25	49.0 to 53.9	5.0 to 5.5	36.2 to 39.8
Bearing case cover screw	M6 × 1.0	9.8 to 11.3	1.00 to 1.15	7.2 to 8.3
* Idle gear shaft screw	M6 × 1.0	9.8 to 11.3	1.00 to 1.15	7.2 to 8.3
* Oil pressure switch	PT 1/8	14.7 to 19.6	1.5 to 2.0	10.8 to 14.5
Idle adjust screw cap nut	M6 × 1.0	7.8 to 9.8	0.8 to 1.0	5.8 to 7.2
Fuel limit cap nut	M6 × 1.0	7.8 to 9.8	0.8 to 1.0	5.8 to 7.2

■ **NOTE**

- **In removing and applying the bolts and nuts marked with "*", a pneumatic wrench or similar pneumatic tool, if employed, must be used with enough care not to get them seized.**
- **For * marked screws, bolts and nuts on the table, apply engine oil to their threads and seats before tightening.**
- **The letter "M" in Size x Pitch means that the screw, bolt or nut dimension stands for metric. The size is the nominal outside diameter in mm of the threads. The pitch is the nominal distance in mm between two threads.**

W10132360

4. CHECKING, DISASSEMBLING AND SERVICING

[1] SEPARATE ENGINE

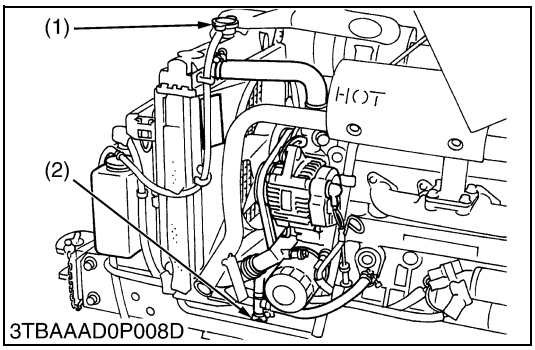

Draining Coolant

CAUTION

- **Never open the radiator cap while operating or immediately after stopping. Otherwise, hot water will spout out from the radiator. Wait for more than ten minutes to cool the radiator, before opening the cap.**

1. Loosen the drain cock (2) from the radiator hose to drain coolant.
2. Remove the radiator cap (1) to drain coolant completely.

Coolant capacity (with recovery tank)	B1710 B2110 B2410	3.8 L 4.0 U.S.qts. 3.3 Imp.qts.
	B2710	4.5 L 4.7 U.S.qts. 4.0 Imp.qts.

(1) Radiator Cap (2) Drain Cock

W10147810

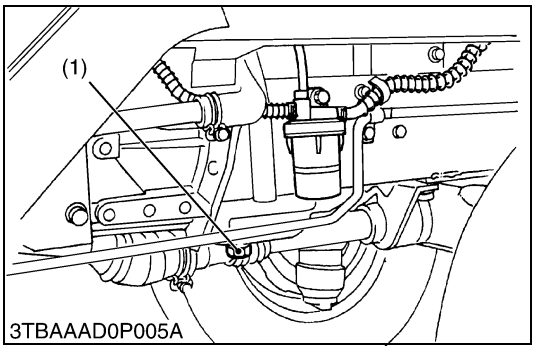

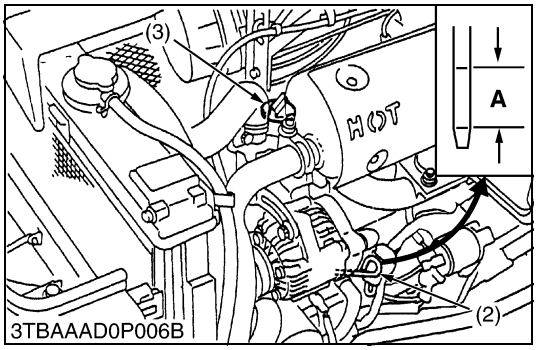

Draining Engine Oil

1. Start and warm up the engine for approx. 5 minutes.
2. Place an oil pan underneath the engine.
3. Remove the drain plug (1) to drain oil.
4. Screw in the drain plug (1).

(When refilling)

- Fill the engine oil up to the upper line on the dipstick (2).

■ **IMPORTANT**

- **Never mix two different type of oil.**
- **Use the proper SAE Engine Oil according to ambient temperature.**
  Refer to "LUBRICANTS, FUEL AND COOLANT". (See page G-8.)

Engine oil capacity	B1710 B2110 B2410	3.0 L 3.2 U.S.qts. 2.6 Imp.qts.
	B2710	4.1 L 4.3 U.S.qts. 3.6 Imp.qts.

(1) Drain Plug
(2) Dipstick
(3) Oil Inlet Plug

A : Oil level is acceptable within this range.

W10149950

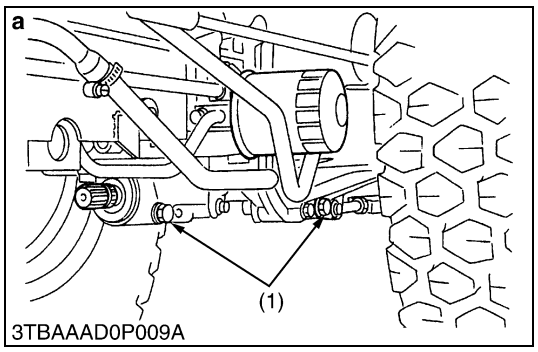

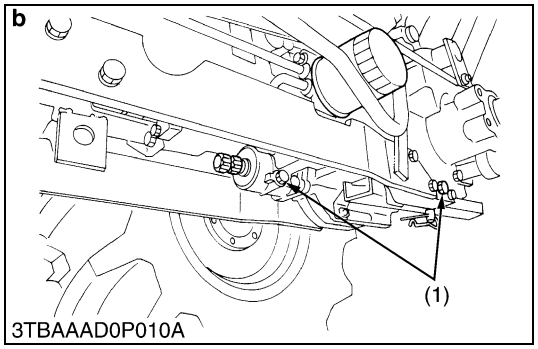

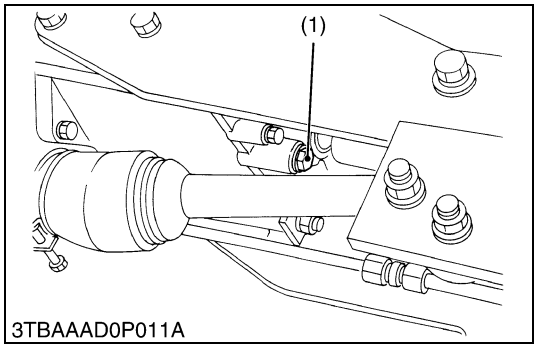

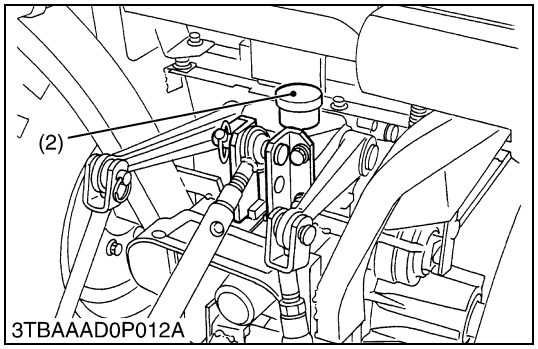

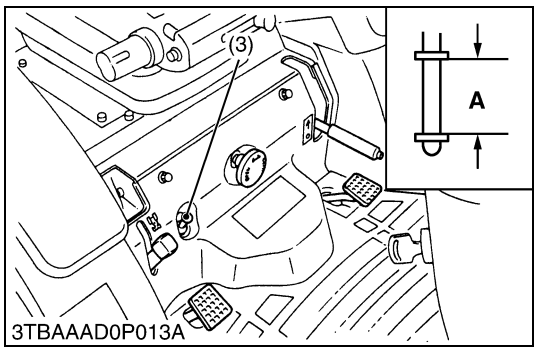

Draining Transmission Fluid

1. Place oil pan underneath the transmission case, and remove the drain plugs (1).
2. Drain the transmission fluid.
3. Reinstall the drain plug (1).

(When refilling)

- Fill new oil from filling port after removing the filling plug (2) up to the upper notch on the dipstick (3).
- After running the engine for few minutes, stop it and check the oil level again, if low, add oil prescribed level.

■ **IMPORTANT**

- **Use only KUBOTA UDT fluid-Use of other oils may damage the transmission or hydraulic system.**
  Refer to "LUBRICANTS, FUEL AND COOLANT". (See page G-8.)
- **Never work the tractor immediately after changing the transmission oil. Keeping the engine at medium speed for a few minutes to prevents damage to the transmission.**
- **Do not mix different brands oil together.**

Transmission fluid capacity	B1710D B2110D B2110DB B2410D B2410DB	11.5 L 3.04 U.S.gals. 2.53 Imp.gals.
	B2110HDB B2410HDB	12.5 L 3.30 U.S.gals. 2.75 Imp.gals.
	B2710HDB	15.5 L 4.10 U.S.gals. 3.41 Imp.gals.

(1) Drain Plug
(2) Filling Port
(3) Dipstick

A : Oil level is acceptable within this range.
a : B1710, B2110, B2410
b : B2710

W10152230

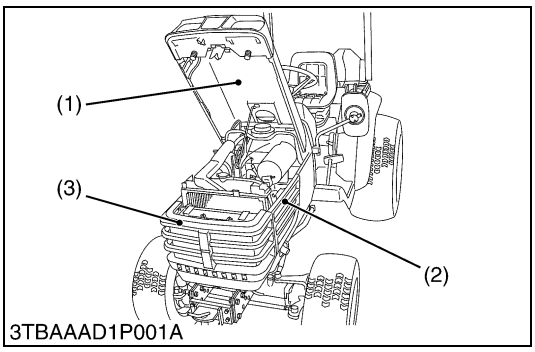

Hood, Side Cover and Front Grille

1. Open the hood (1) and remove the front grille (3).
2. Disconnect the head light connectors and remove the hood and side covers (2).

(1) Hood
(2) Side Cover
(3) Front Grille

W10156940

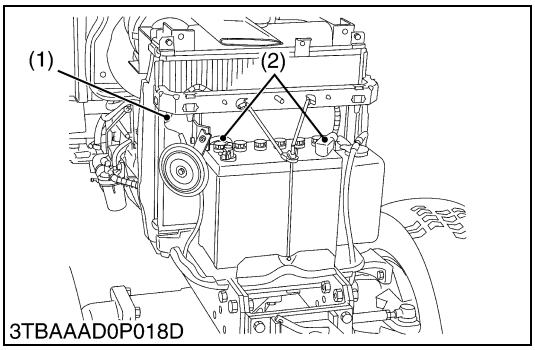

Battery and Horn

1. Disconnect the battery cords (2) and horn connector (1).

■ **NOTE**

- **When disconnecting the battery cords, disconnect the grounding cord first. When connecting, positive cord first.**

(1) Horn Connector
(2) Battery Cord

W10424310

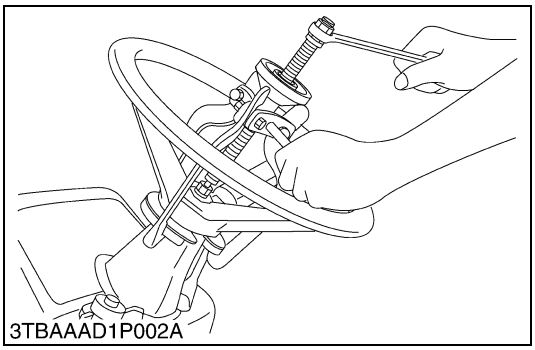

Steering Wheel

1. Remove the steering wheel cap.
2. Remove the steering wheel mounting nut and remove the steering wheel with a steering wheel puller (Code No. 07916-51090).

(When reassembling)

Tightening torque	Steering wheel mounting nut	29.4 to 49.0 N·m 3.0 to 5.0 kgf·m 21.7 to 36.2 ft-lbs

W10158450

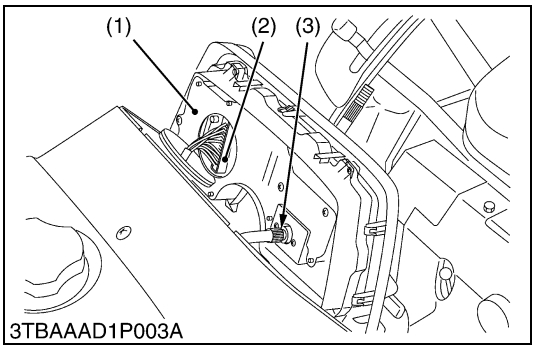

Meter Panel and Panel Under Cover

1. Open the meter panel (1) and disconnect the meter panel connector (2) and hour-meter cable (3). Then remove the meter panel.
2. Disconnect the combination switch connector (8), main switch connector (4), hazard switch connector (6) and position light switch connector (7).
3. Tap out the spring pin and remove the hand accelerator lever (5).
4. Remove the panel under cover (9).

(1) Meter Panel
(2) Meter Panel Connector
(3) Hour-meter Cable
(4) Main Switch Connector
(5) Hand Accelerator Lever
(6) Hazard Switch Connector
(7) Position Light Switch Connector
(8) Combination Switch Connector
(9) Panel Under Cover

W10160340

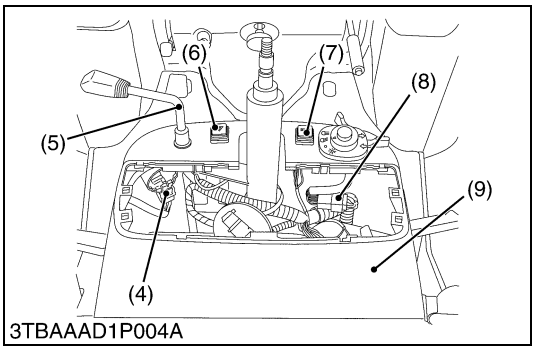

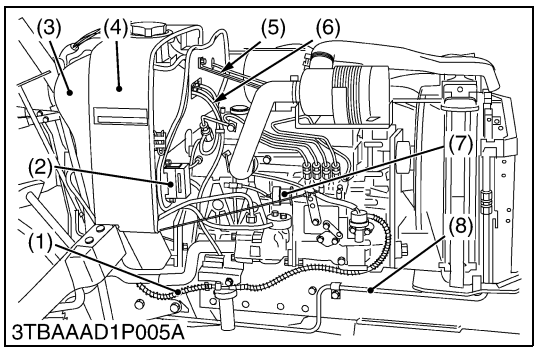

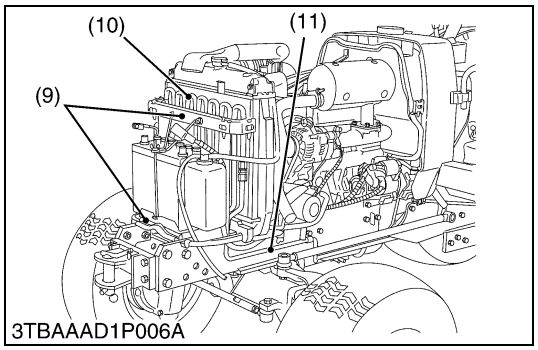

Fuel Tank and Oil Cooler

1. Disconnect the fuel hose (1) at the fuel filter side, then drain fuel completely.
2. Remove the fuel tank frame stay (5).
3. Disconnect the flasher unit and starter relay connectors and remove the lead wire for fuel gauge.
4. Remove the fuse box (2).
5. Disconnect the overflow hoses (6) of fuel line.
6. Remove the tank frame (4) with fuel tank (3).
7. Disconnect the hydraulic pipes (8), (11) and remove the battery stay (9) with oil cooler (10).
8. Disconnect the **2P** connector and remove the engine stop solenoid (7).

(When reassembling)

- Apply a thin coat of liquid gasket (Three Bond 1215 or equivalent) to both surface of the engine stop solenoid (7).

■ **NOTE**

- **For fastening hydraulic pipe nut, use two wrenches. Hold the fitting with a wrench, turn the pipe nut with another wrench to avoid damage at fitting installed part.**

Tightening torque	Delivery pipe nut for HST	34 to 39 N·m 3.5 to 4.0 kgf·m 25.3 to 28.9 ft-lbs
	Oil cooler pipe nut	50 to 58 N·m 5.1 to 5.9 kgf·m 36.9 to 42.8 ft-lbs

(1) Fuel Hose
(2) Fuse Box
(3) Fuel Tank
(4) Fuel Tank Frame
(5) Fuel Tank Frame Stay
(6) Overflow Hose
(7) Engine Stop Solenoid
(8) Oil Cooler Pipe IN (HST Model)
(9) Battery Stay
(10) Oil Cooler (HST Model)
(11) Oil Cooler Pipe OUT (HST Model)

W10162030

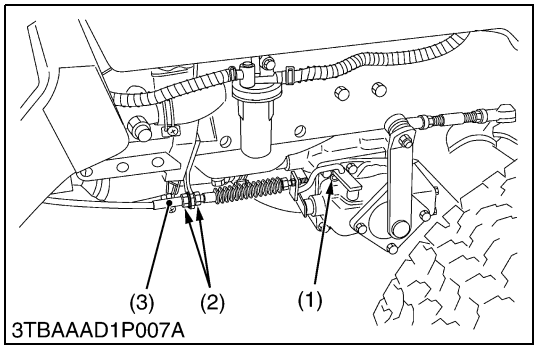

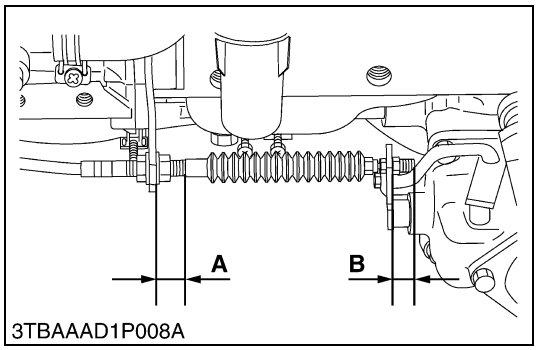

Bi-speed Turn Cable (Bi-speed Model)

1. Remove the spring lock pin (1) and loosen the lock nuts (2) and then remove the bi-speed turn cable (3).

(When reassembling)

- When reassembling the bi-speed turn cable (3), make sure the distance **A**.

Distance **A**	Factory spec.	B2110 B2410	18 mm 0.71 in.
		B2710	16 mm 0.63 in.

(Reference)

Distance **B**	Factory spec.	B2110 B2410	10 mm 0.39 in.
		B2710	8 mm 0.31 in.

(1) Spring Lock Pin
(2) Lock Nut
(3) Bi-speed Turn Cable

W10579030

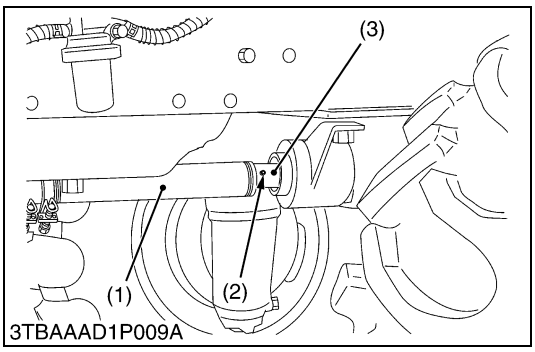

Propeller Shaft Cover and Coupling

1. Loosen the clamp and slide the propeller shaft cover (1) to the rear.
2. Tap out the spring pin (2) and then slide the coupling (3) to the rear.

(When reassembling)

- Apply grease to the splines of the propeller shaft and coupling.

(1) Propeller Shaft Cover
(2) Spring Pin
(3) Coupling

W10167000

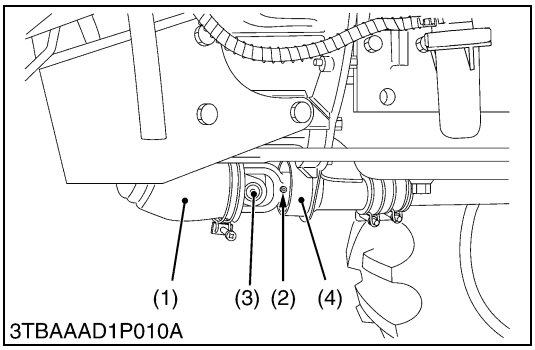

Universal Joint and Bearing Holder

1. Loosen the clamp and slide the universal joint cover (1) to the rear.
2. Tap out the spring pins (2) and then slide the universal joint (3) to the rear.
3. Remove the bearing holder (4) with propeller shaft and universal joint.

(When reassembling)

- Apply grease to the splines of the propeller shaft and universal joint.
- When inserting the spring pins (2), face their splits in the direction parallel to the universal joint as shown in the figure.

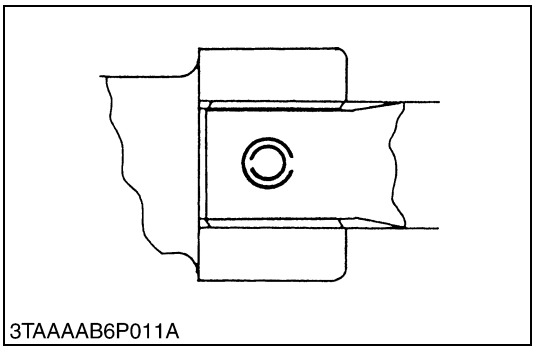

(1) Universal Joint Cover
(2) Spring Pin
(3) Universal Joint
(4) Bearing Holder

W10169120

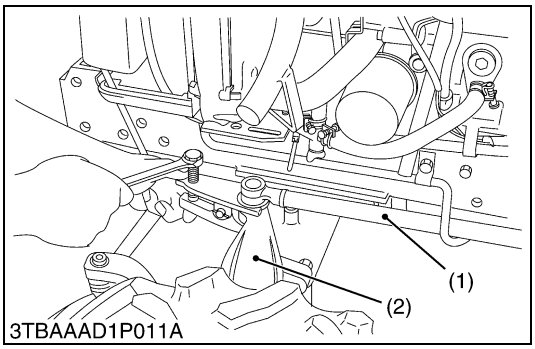

Drag Link

1. Remove the cotter pin and loosen the slotted nut.
2. Disconnect the drag link (1) with a tie-rod end lifter from the knuckle arm (2).

(When reassembling)

■ **IMPORTANT**

- **Do not loosen the slotted nut to align the hole.**
- **Install the cotter pin as shown in the figure.**

(Reference)

Tightening torque	Slotted nut	17.7 to 34.5 N·m 1.8 to 3.5 kgf·m 13.0 to 25.3 ft-lbs

(1) Drag Link
(2) Knuckle Arm

W10170780

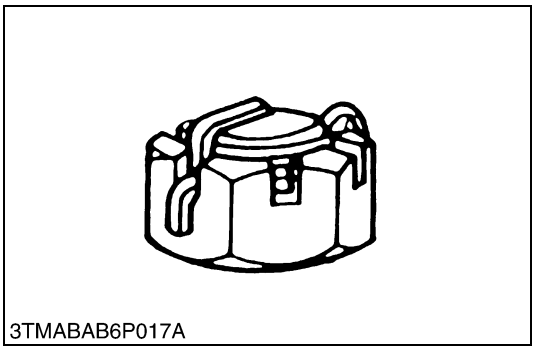

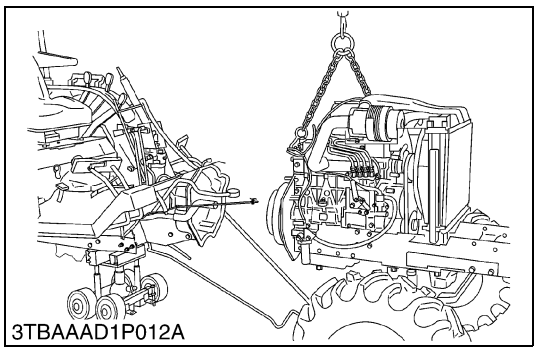
3TBAAAD1P012A

Separating the Engine from Clutch Housing

1. Remove the power steering delivery pipe.
2. Disconnect the accelerator rod.
3. Disconnect the three point hitch delivery pipe and suction hose at the hydraulic pump.
4. Disconnect the glow plug lead wire and thermo sensor lead wire. And then disconnect the connector for alternator and starter motor lead wire.
5. Place the jack under the center frame.
6. Hoist the engine by the chain at the engine hook.
7. Remove the engine mounting screws and separate the engine from the clutch housing.

(When reassembling)

- Apply liquid gasket (Three Bond 1208D or equivalent) to joint face of the engine and clutch housing.

Tightening torque	Engine mounting screw	17.7 to 20.6 N·m 1.8 to 2.1 kgf·m 13.0 to 15.2 ft-lbs
	Engine mounting nut	48.1 to 55.8 N·m 4.9 to 5.7 kgf·m 35.5 to 41.2 ft-lbs
	Delivety pipe nut for power steering	65 to 75 N·m 6.6 to 7.7 kgf·m 47.9 to 55.3 ft-lbs

W10172740

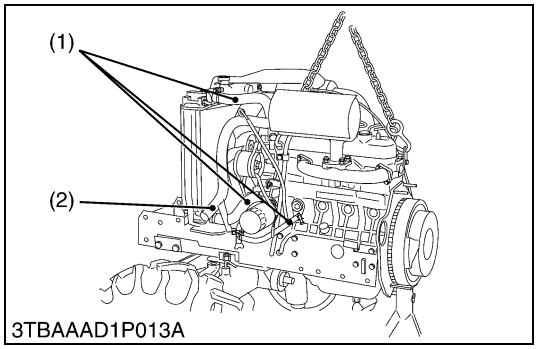

3TBAAAD1P013A

Separating Front Axle Assembly

1. Disconnect the radiator hoses (1).
2. Remove the muffler pipe (2).
3. Hoist the engine by the chain at the engine hook.
4. Remove the front axle frame mounting screws and separate the front axle assembly from the engine.

(1) Radiator Hose (2) Muffler Pipe

W10175170

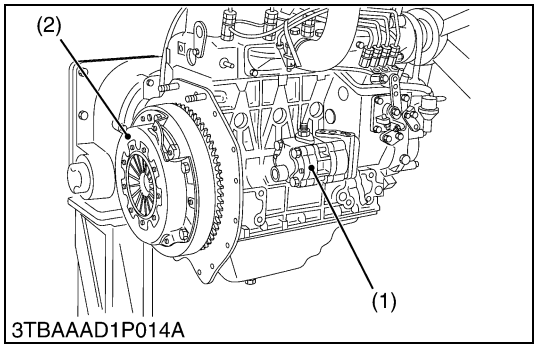

3TBAAAD1P014A

Outer Parts

1. Remove the hydraulic pump (1).
2. Remove the clutch assembly (2).

(When reassembling)

- Direct the shorter end of the clutch disc boss toward the flywheel.
- Apply molybdenum disulphide (Three Bond 1901 or equivalent) to the splines of clutch disc boss.
- Insert the pressure plate noting the position of straight pins.

■ **IMPORTANT**

- **Be sure to align the center of disc and flywheel by inserting the clutch center tool (3).**

■ **NOTE**

- **Do not allow grease and oil on the clutch disc facing.**

Tightening torque	Clutch cover mounting screw	23.5 to 27.5 N·m 2.4 to 2.8 kgf·m 17.4 to 20.3 ft-lbs

(1) Hydraulic Pump
(2) Clutch Assembly
(3) Clutch Center Tool

W10176370

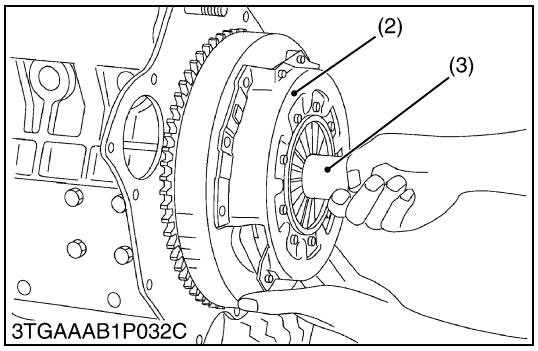

3TGAAAB1P032C

[2] ENGINE BODY

(1) Checking and Adjusting

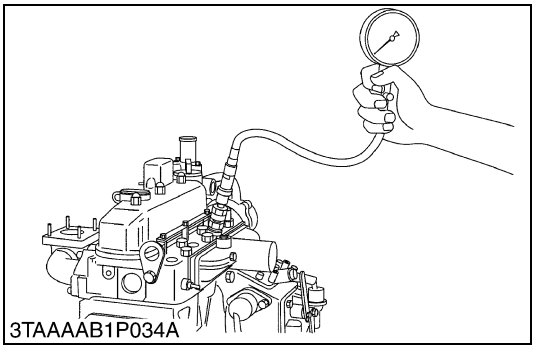
3TAAAAB1P034A

Compression Pressure

1. Run the engine until it is warmed up.
2. Stop the engine and disconnect the **2P** connector from the engine stop solenoid.
3. Remove the air cleaner, the muffler and all injection nozzles.
4. Set a compression tester (Code No. 07909-30208) with the adaptor to the nozzle hole.
5. While cranking the engine with the starter, measure the compression pressure.
6. Repeat steps 4 and 5 for each cylinder.
7. If the measurement is below the allowable limit, apply a small amount of oil to the cylinder wall through the nozzle hole and measure the compression pressure again.
8. If the compression pressure is still less than the allowable limit, check the top clearance, valve and cylinder head.
9. If the compression pressure increases after applying oil, check the cylinder wall and piston rings.

■ **NOTE**
- **Check the compression pressure with the specified valve clearance.**
- **Always use a fully charged battery for performing this test.**
- **Variances in cylinder compression values should be under 10 %.**

Compression pressure	Factory spec.	2.84 to 3.24 MPa 29 to 33 kgf/cm^2 412 to 469 psi
	Allowable limit	2.26 MPa 23 kgf/cm^2 327 psi

W10178940

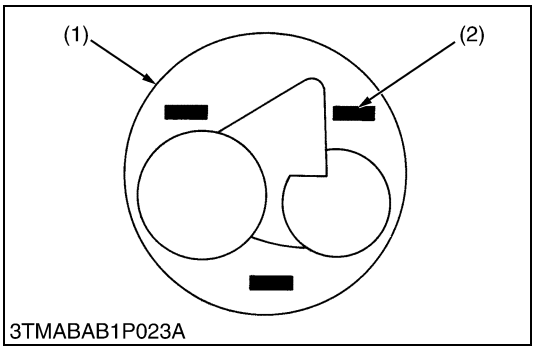

3TMABAB1P023A

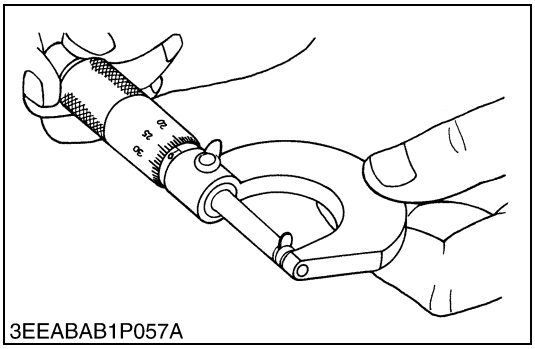
3EEABAB1P057A

Top Clearance

1. Remove the cylinder head. (Do not attempt to remove the cylinder head gasket.)
2. Move the piston up and stick a strip of fuse [1.5 mm dia. (0.059 in. dia.), 5 to 7 mm long (0.197 to 0.276 in. long)] on the piston head at three positions with grease so as to avoid the intake and exhaust valves and the combustion chamber ports.
3. Lower the piston and install the cylinder head and tighten the cylinder head screws to the specified torque.
4. Turn the flywheel until the piston exceeds its top dead center.
5. Remove the cylinder head, and measure the thickness of the squeezed fuses.
6. If the measurement is not within the factory specifications, check the oil clearance between the crankpin and crankpin bearing and between the piston pin and small end bushing.

■ **NOTE**
- **After checking the top clearance, be sure to assemble the cylinder head with a new cylinder head gasket.**

Top clearance	Factory spec.	0.55 to 0.70 mm 0.0217 to 0.0276 in.

(1) Piston (2) Fuse

W10201900

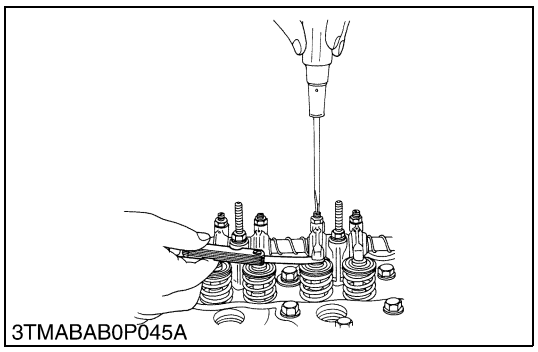
3TMABAB0P045A

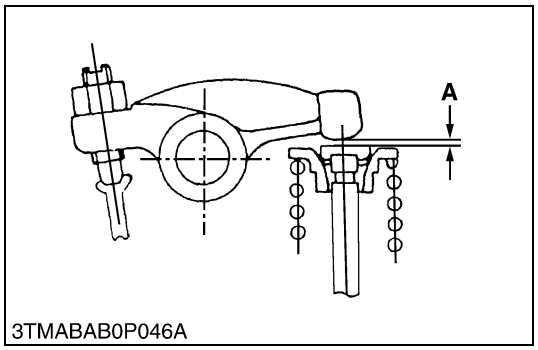

3TMABAB0P046A

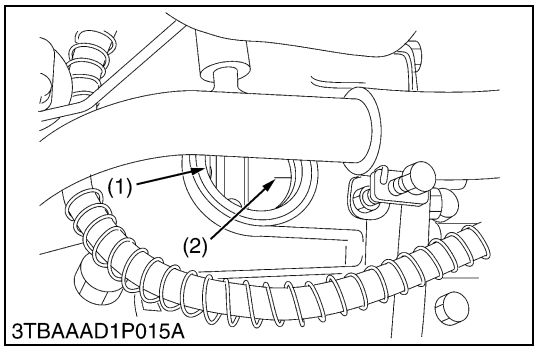

3TBAAAD1P015A

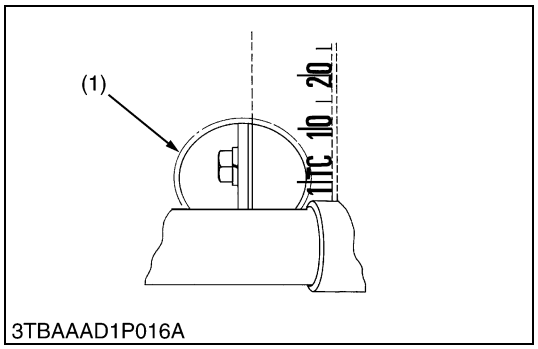

3TBAAAD1P016A

Valve Clearance

■ **IMPORTANT**

- **Valve clearance must be checked and adjusted when engine is cold.**

1. Remove the head cover, the glow plugs and the timing window cover on the clutch housing.
2. Align the **"1TC"** mark line on the flywheel and center of timing window so that the No. 1 piston comes to the compression or overlap top dead center.
3. Check the following valve clearance marked with "☆" using a feeler gauge.
4. If the clearance is not within the factory specifications, adjust with the adjusting screw.

Valve clearance	Factory spec.	0.145 to 0.185 mm 0.00571 to 0.00728 in.

■ **NOTE**

- **The "TC" marking line on the flywheel is just for No. 1 cylinder. There is no "TC" marking for the other cylinders.**
- **No. 1 piston comes to the T.D.C. position when the "TC" marking is aligned with center of timing window on clutch-housing. Turn the flywheel 0.26 rad. (15 °) clockwise and counterclockwise to see if the piston is at the compression top dead center or the overlap position. Now referring to the table below, readjust the valve clearance. (The piston is at the compression top dead center when both the IN. and EX. valves do not move; it is at the overlap position when both the valves move.)**
- **Finally turn the flywheel 6.28 rad. (360 °) and align the "TC" marking line and the center of timing window. Adjust all the other valve clearance as required.**
- **After turning the flywheel counterclockwise twice or three times, recheck the valve clearance, firmly tighten the lock nut of the adjusting screw.**
- **The sequence of cylinder numbers is given as No. 1, No. 2, No. 3 and No. 4 starting from the gear case side.**

Adjustable cylinder location of piston \ Valve arrangement		IN.		EX.	
		3 cyd.	4 cyd.	3 cyd.	4 cyd.
When No. 1 piston is compression top dead center	1st	☆	☆	☆	☆
	2nd		☆	☆	
	3rd	☆			☆
	4th	–	☆	–	
When No. 1 piston is overlap position	1st				
	2nd	☆			☆
	3rd		☆	☆	
	4th	–		–	☆

(1) Timing Window
(2) TC Mark Line

A : Valve Clearance

W10189740

(2) Disassembling and Assembling

(A) Cylinder Head and Valves

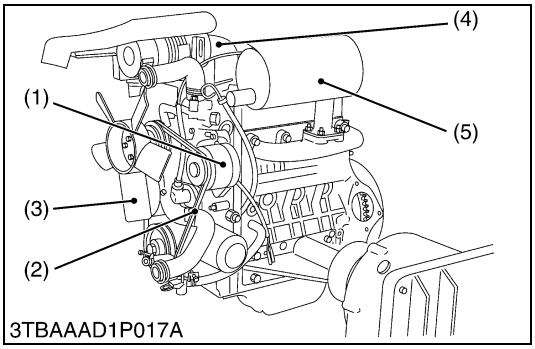

Alternator, Fan Belt and Muffler

1. Remove the alternator (1) and fan belt (2).
2. Remove the cooling fan (3) and fan pulley.
3. Remove the air cleaner assembly and stay.
4. Remove the muffler (5).

(When reassembling)

- Check to see that there are no cracks on the belt surface.

■ **IMPORTANT**

- **After reassembling the fan belt, be sure to adjust the fan belt tension. (See page G-20.)**

(1) Alternator
(2) Fan Belt
(3) Cooling Fan
(4) Air Cleaner
(5) Muffler

W10192100

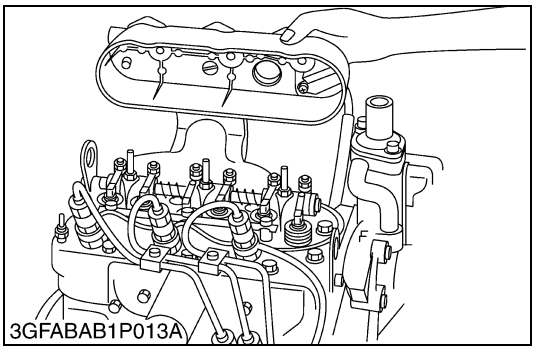

Cylinder Head Cover and Injection Pipes

1. Remove the head cover cap nuts.
2. Remove the cylinder head cover.
3. Loosen the screws on the pipe clamps.
4. Detach the injection pipes.

(When reassembling)

- Check to see if the cylinder head cover gasket is not defective.
- Sent compressed air into the pipes to blow out dust. Then, reassemble the pipes in the reverse order.

Tightening torque	Cylinder head cover cap nut	6.9 to 8.8 N·m 0.7 to 0.9 kgf·m 5.1 to 6.5 ft-lbs
	Injection pipe retaining nut	24.5 to 34.3 N·m 2.5 to 3.5 kgf·m 18.1 to 25.3 ft-lbs

W10194870

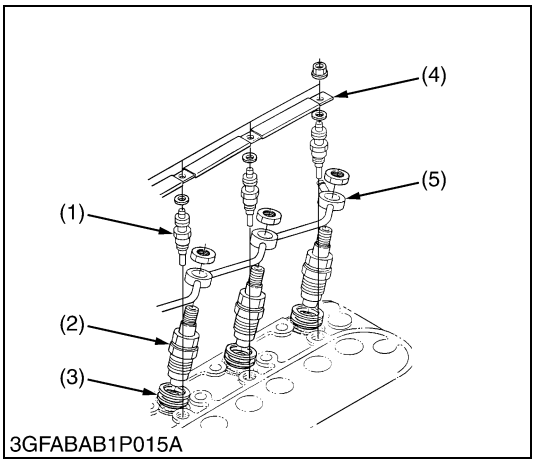

Nozzle Holder Assembly and Glow Plug

1. Remove the overflow pipe assembly (5).
2. Remove the nozzle holder assemblies (2).
3. Remove the copper gasket and heat seal (3).
4. Remove the lead (4) from the glow plugs.
5. Remove the glow plugs (1).

(When reassembling)

- Replace the copper gasket and heat seal with new one.

Tightening torque	Nozzle holder assembly	49.0 to 68.6 N·m 5.0 to 7.0 kgf·m 36.2 to 50.6 ft-lbs
	Overflow pipe assembly retaining nut	19.6 to 24.5 N·m 2.0 to 2.5 kgf·m 14.5 to 18.1 ft-lbs
	Glow plug	7.8 to 14.7 N·m 0.8 to 1.5 kgf·m 5.8 to 10.8 ft-lbs

(1) Glow Plug
(2) Nozzle Holder Assembly
(3) Heat Seal
(4) Lead
(5) Overflow Pipe Assembly

W10198550

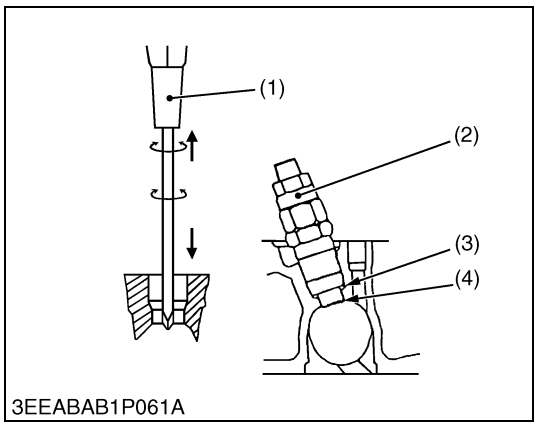

3EEABAB1P061A

Nozzle Heat Seal Service Removal Procedure

■ **IMPORTANT**
- **Use a plus (phillips head) screw driver (1) that has a Dia. which is bigger than the heat seal hose (Approx. 6 mm) 1/4 in.**

1. Drive screw driver (1) lightly into the heat seal hole.
2. Turn screw driver three or four times each way.
3. While turning the screw driver, slowly pull the heat seal (4) out together with the copper gasket (3).
4. If the heat seal drops, repeat the above procedure.

(When reassembling)
- Heat seal and copper gasket must be changed when the injection nozzle is removed for cleaning or for service.

(1) Plus Screw Driver
(2) Nozzle Holder
(3) Copper Gasket
(4) Heat Seal

W10200640

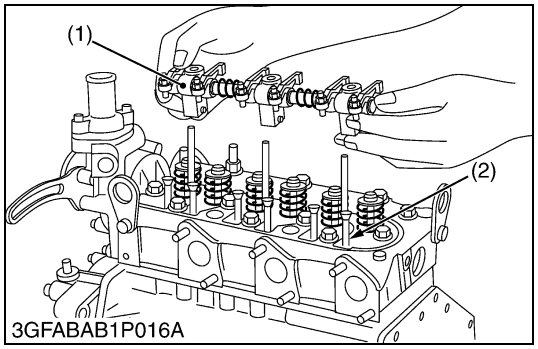

3GFABAB1P016A

Rocker Arm and Push Rod

1. Remove the rocker arm bracket nuts.
2. Detach the rocker arm assembly (1).
3. Remove the push rods (2).

(When reassembling)
- When putting the push rods (2) onto the tappets (3), check to see if their ends are properly engaged with the grooves.

■ **IMPORTANT**
- **After installing the rocker arm, be sure to adjust the valve clearance.**

Tightening torque	Rocker arm bracket nut	21.6 to 26.5 N·m 2.2 to 2.7 kgf·m 15.9 to 19.5 ft-lbs

(1) Rocker Arm Assembly
(2) Push Rod
(3) Tappet

W10203230

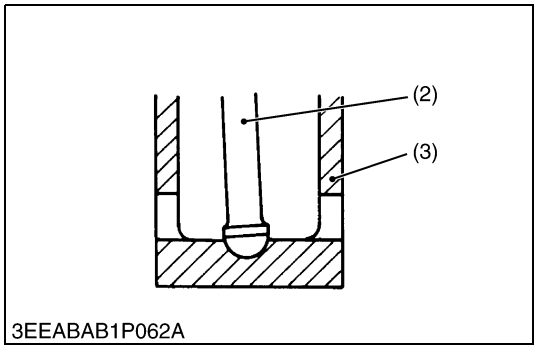

3EEABAB1P062A

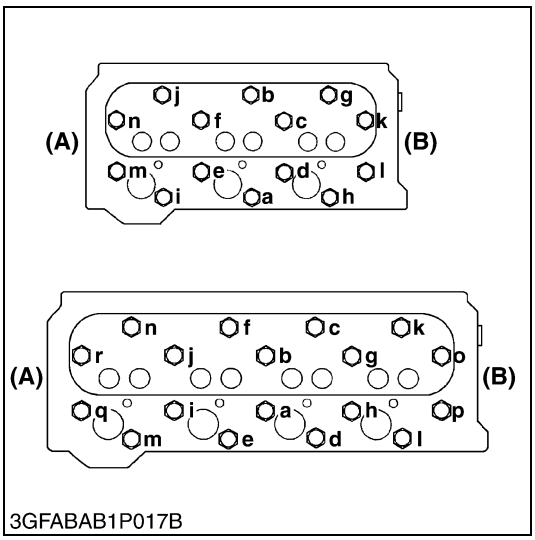

3GFABAB1P017B

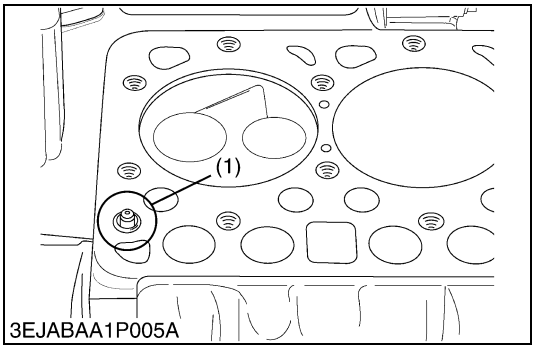

3EJABAA1P005A

Cylinder Head

1. Loosen the pipe clamp, and remove the water return pipe.
2. Remove the cylinder head screw in the order of (**n**) or (**r**) to (**a**).
3. Lift up the cylinder head to detach.
4. Remove the cylinder head gasket and O-ring (1). (Only for carbon gasket type.)

(When reassembling)

- Replace the cylinder head gasket with a new one.
- Securely fit the O-ring (1) to the pipe pin.
- Tighten the cylinder head screws after applying sufficient oil.
- Tighten the cylinder head screws gradually screw in the order of (**a**) to (**n**) or (**r**).
- Tighten them uniformly, or the head may deform in the long run.
- Retighten the cylinder head screws after running the engine for 30 minutes.

■ **NOTE**

- **The carbon gasket can be used for the engine with the metal gasket but additionally O-ring (15221-33700) is required. Remember, you must retorque the cylinder head and readjust the valve clearance if using the carbon gasket.**
- **The metal gasket cannot be used for the carbon type specification engine.**
- **Do not use O-ring on the oil pin when you use the metal gasket.**
- **When the metal gasket is used, retightening of the cylinder head bolt and the readjustment of the valve clearance are not necessary.**

Tightening torque	Cylinder head screw	63.7 to 68.6 N·m 6.5 to 7.0 kgf·m 47.0 to 50.6 ft-lbs

(1) O-ring

(A) Flywheel Side
(B) Gear Case Side
(n) or (r) to (a) : To Loosen
(a) to (n) or (r) : To Tighten

W10205250

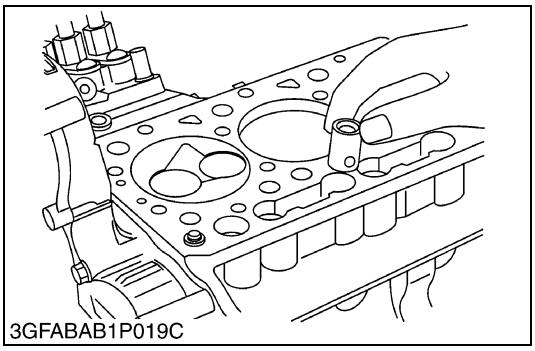
3GFABAB1P019C

Tappets

1. Remove the tappets from the crankcase.

(When reassembling)

- Visually check the contact between tappets and cams for proper rotation. If defect is found, replace tappets.
- Before installing the tappets, apply engine oil thinly around them.

■ **IMPORTANT**

- **Do not change the combination of tappet and tappet guide.**

W10209700

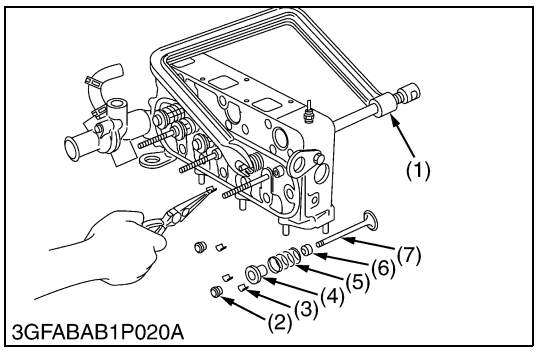

3GFABAB1P020A

Valves

1. Remove the valve caps (2).
2. Remove the valve spring collet (3), pushing the valve spring retainer (4) by valve spring replacer (1).
3. Remove the valve spring retainer (4), valve spring (5) and valve stem seal (6).
4. Remove the valve (7).

(When reassembling)

- Wash the valve stem and valve guide hole, and apply engine oil sufficiently.
- After installing the valve spring collets, lightly tap the stem to assure proper fit with a plastic hammer.

■ **IMPORTANT**

- **Don't change the combination of valve and valve guide.**

(1) Valve Spring Replacer
(2) Valve Cap
(3) Valve Spring Collet
(4) Valve Spring Retainer
(5) Valve Spring
(6) Valve Stem Seal
(7) Valve

W10211070

(B) Timing Gears, Camshaft and Fuel Camshaft

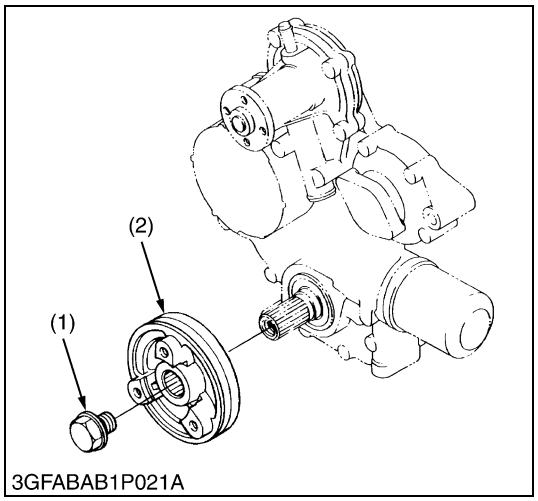

3GFABAB1P021A

Fan Drive Pulley

1. Set the stopper to the flywheel.
2. Remove the fan drive pulley screw (1).
3. Draw out the fan drive pulley (2) with a puller.

(When reassembling)

- Install the fan drive pulley to the crankshaft, aligning the marks (3) on them.

Tightening torque	Fan drive pulley retaining screw (Crankshaft screw)	235.4 to 245.2 N·m 24.0 to 25.0 kgf·m 173.6 to 180.8 ft-lbs

(1) Fan Drive Pulley Retaining Screw (Crankshaft Screw)
(2) Fan Drive Pulley
(3) Aligning Mark

W10181950

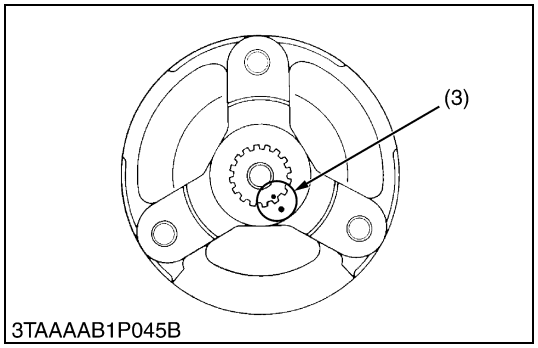

3TAAAAB1P045B

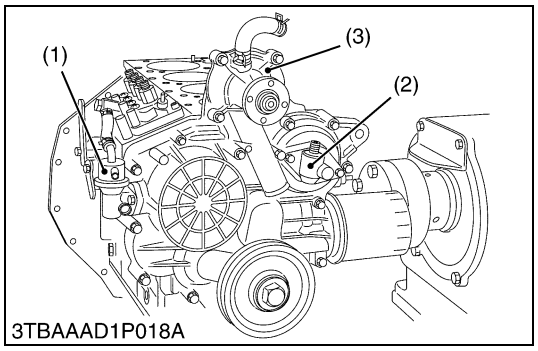

3TBAAAD1P018A

Fuel Pump, Hour Meter Gear Case and Water Pump

1. Remove the fuel pump (1).
2. Remove the hour meter gear case (2).
3. Remove the water pump flange.

(When reassembling)

- Before installing the hour meter gear case gasket, apply liquid gasket (Three Bod 1215 or equivalent) to the both side.

(1) Fuel Pump
(2) Hour Meter Gear Case
(3) Water Pump Flange

W10216640

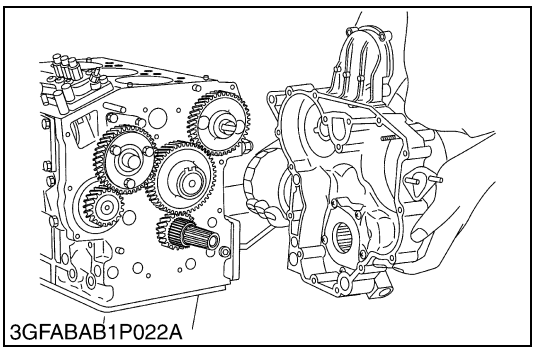
3GFABAB1P022A

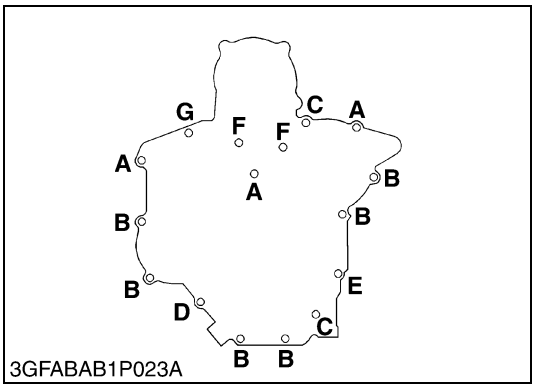

3GFABAB1P023A

Gear Case

1. Remove the gear case.
2. Remove the crankshaft collar and O-rings.

(When reassembling)

- Replace the gear case gasket with a new one.
- Be sure to set four O-rings inside the gear case and the O-ring on the crankshaft.
- Apply a thin film of engine oil to the oil seal, and install it, noting the lip come off.
- Length of the gear case mounting screws. (Refer to the figure.)
  A : 45 mm (1.77 in.)
  B : 50 mm (1.97 in.)
  C : 55 mm (2.17 in.)
  D : 59 mm (2.32 in.)
  E : 68 mm (2.68 in.)
  F : 80 mm (3.15 in.)
  G : Nut

■ **NOTE**

- **Engine serial ranges : From 1U5494 (For all diesel engine 05 series)**
  - **The four o-rings on the gear case of the engine have been removed, as the gear case gasket has been replaced with a metallic model.**
  - **When you install a metallic gasket model,**
    1. Only use a new one.
    2. A liquid gasket is not necessary.

W10220030

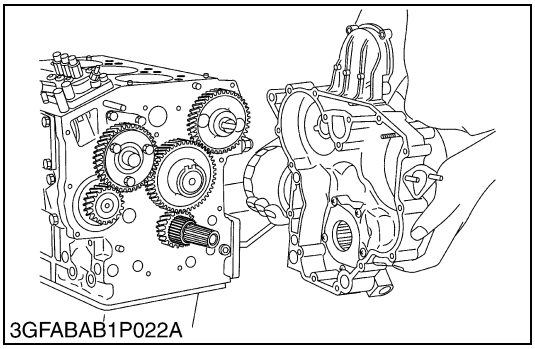
3GFABAB1P022A

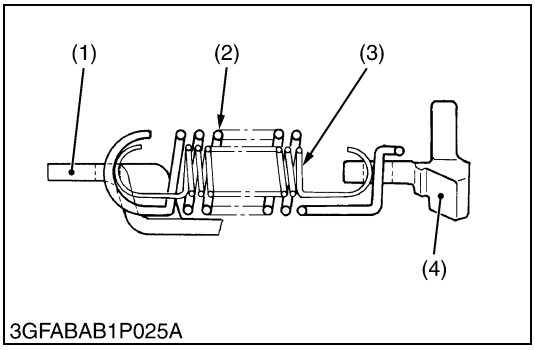

3GFABAB1P025A

Speed Control Plate

1. Remove the speed control plate and governor lever (1) from the governor springs 1 (2) and 2 (3).

(When reassembling)

- Securely catch the governor springs 1 and 2 on the governor lever as shown in the figure.
- Apply a liquid gasket (Three Bond 1215 or equivalent) to both sides of the speed control plate gasket.

(1) Governor Lever
(2) Governor Spring 1
(3) Governor Spring 2
(4) Fork Lever 2

W10218170

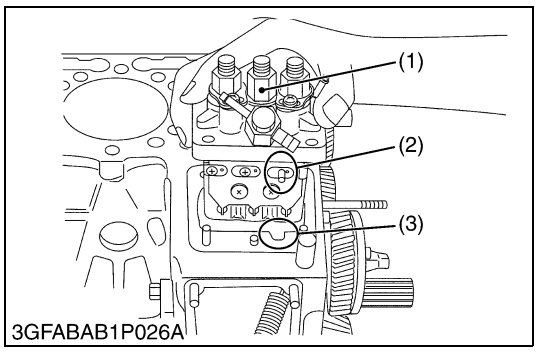

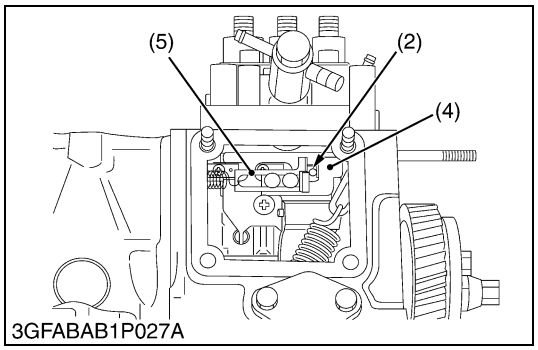

Injection Pump

1. Remove the injection pump mounting screws and nuts.
2. Align the control rack pin (2) with the notch (3) on the crankcase, then remove the injection pump (1).
3. Remove the injection pump timing shims.
4. In principle, the injection pump should not be disassembled.

(When reassembling)

- Securely fit the control rack pin (2) to the grooves of the fork lever 1 (4) and thrust lever (5).
- The sealant is applied to both sides of the shim (soft metal gasket shim). The liquid gasket is not required for assembling.
- Addition or reduction of shims (0.05 mm, 0.0020 in.) delays or advances the injection timing by approx. 0.0087 rad. (0.5 °).
- In disassembling and replacing, be sure to use the same number of new shims with the same thickness.

(1) Injection Pump
(2) Control Rack Pin
(3) Notch
(4) Fork Lever 1
(5) Thrust Lever

W10223180

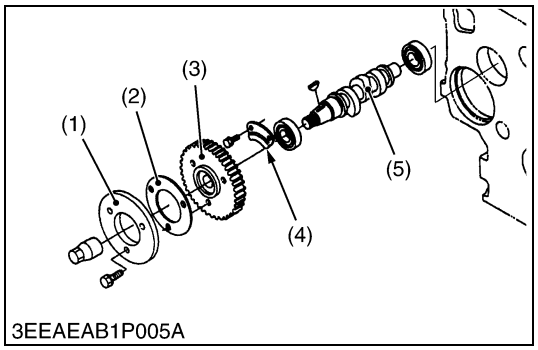

Fuel Camshaft

1. Remove the fuel camshaft stopper (4).
2. Draw out the fuel camshaft (5) and injection pump gear (3).
3. Remove the fuel feed pump cam (1) from the injection pump gear (3).

(When reassembling)

- Apply engine oil thinly to the fuel camshaft before installation.
- Check to see each aligning marks of cam (1) and gear (3) are aligned.

(1) Fuel Feed Pump Cam
(2) Washer
(3) Injection Pump Gear
(4) Fuel Camshaft Stopper
(5) Fuel Camshaft

W10226430

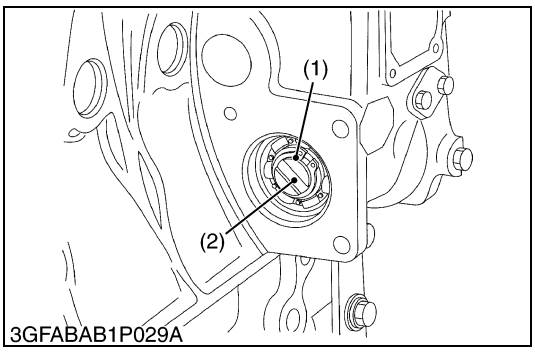

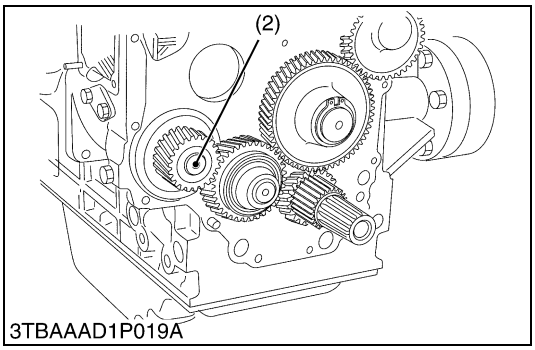

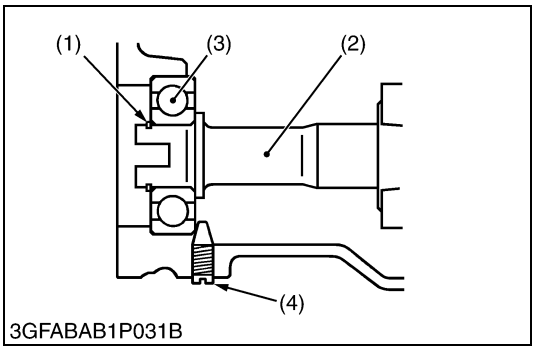

Governor Shaft

1. Remove the external snap ring (1) from the governor shaft.
2. Pull out the governor shaft (2).

(When reassembling)

- Make sure assembling the external snap ring of the governor shaft.
- Check the governor shaft for smooth rotation.

■ **IMPORTANT**

- **When replacing the ball bearing of governor shaft, securely fit the ball bearing (3) to the crankcase, apply an adhesive (Three Bond 1324B or equivalent) to the set screw (4), and fasten the screw until its tapered part contacts the circumferential end of the ball bearing.**

(1) External Snap Ring
(2) Governor Shaft
(3) Ball Bearing
(4) Set Screw

W10228020

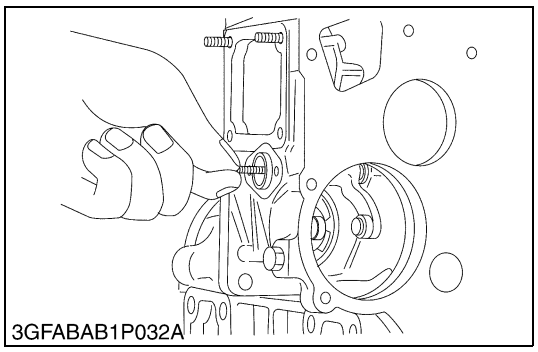
3GFABAB1P032A

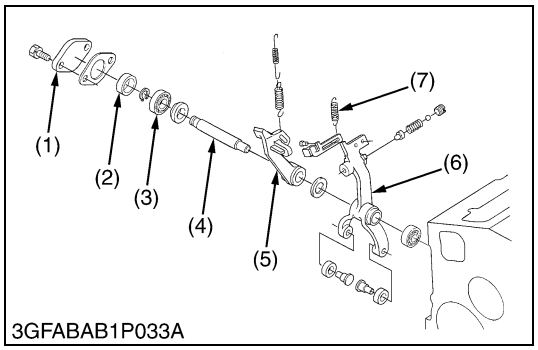

3GFABAB1P033A

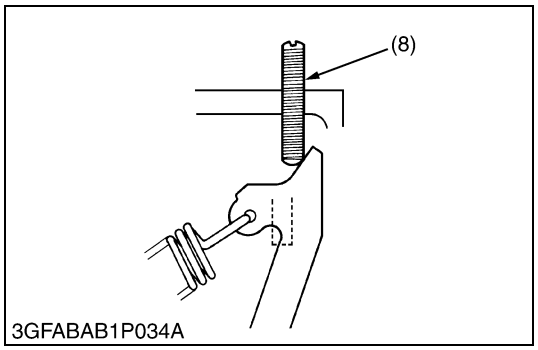

3GFABAB1P034A

Fork Lever

1. Remove the start spring (7).
2. Remove the fork lever shaft cover (1).
3. Pull out the fork lever shaft (4), and remove the spacer (2), bearing (3), fork levers 1 (6) and 2 (5).

(When reassembling)

- Apply a liquid gasket (Three Bond 1215 or equivalent) to the both sides of the fork lever shaft cover, and fit the fork lever shaft cover with the **"UP"** mark facing upwards.
- Securely fit the start spring.

■ **IMPORTANT**

- **Install the fork lever 2 (5) to position it on the right side of the maximum output limit bolt (8) as shown in the figure.**

(1) Fork Lever Shaft Cover
(2) Spacer
(3) Bearing
(4) Fork Lever Shaft
(5) Fork Lever 2
(6) Fork Lever 1
(7) Start Spring
(8) Maximum Output Limit Bolt

W10230800

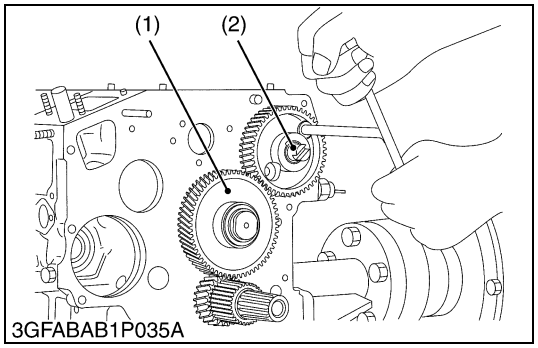

3GFABAB1P035A

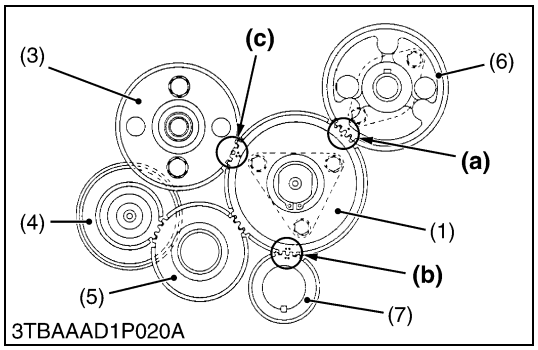

3TBAAAD1P020A

Camshaft and Idle Gear 1

1. Remove the external snap ring, and then remove the idle gear 1 (1).
2. Remove the camshaft stopper mounting screw, and pull out the camshaft (2).

(When reassembling)

- When installing the idle gear 1, be sure to align the alignment marks **(a)**, **(b)**, **(c)** on the gears.
- Securely fit the external snap ring and stopper.

(1) Idle Gear 1
(2) Camshaft
(3) Injection Pump Gear
(4) Governor Gear
(5) Idle Gear 2 (V1305)
(6) Cam Gear
(7) Crank Gear

(a) Alignment Mark (Idle Gear 1 and Cam Gear)
(b) Alignment Mark (Idle Gear 1 and Crank Gear)
(c) Alignment Mark (Idle Gear 1 and Injection Pump Gear)

W10234470

(C) Piston and Connecting Rod

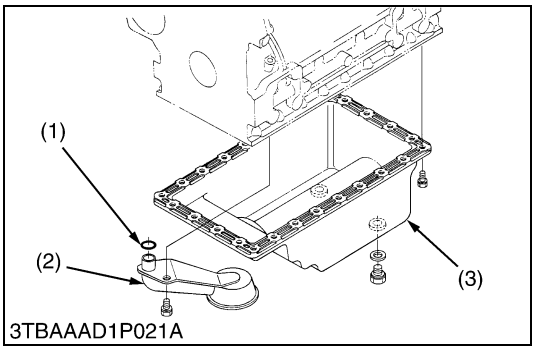

3TBAAAD1P021A

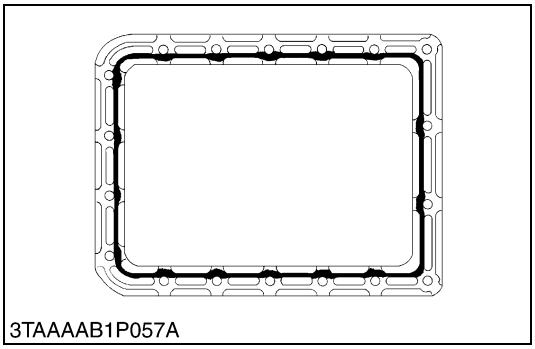
3TAAAAB1P057A

Oil Pan and Oil Strainer

1. Remove the oil pan mounting screws.
2. Remove the oil pan (3) by lightly tapping the rim of the pan with a wooden hammer.
3. Remove the oil strainer (2).

(When reassembling)

- After cleaning the oil strainer, check to see that the filter mesh in clean, and install it.
- Visually check the O-ring (1), apply engine oil, and install it.
- Securely fit the O-ring to the oil strainer.
- Apply a liquid gasket (Three Bond 1215 or equivalent) to the oil pan.
- To avoid uneven tightening, tighten oil pan mounting screws in diagonal order form the center.

■ **IMPORTANT**

- **Scrape off the old adhesive completely. Wipe the sealing surface clean using waste cloth soaked with gasoline. Now apply new adhesive 3 to 5 mm (0.12 to 0.20 in.) thick all over the contact surface. Apply the adhesive also on the center of the flange as well as on the inner wall of each bolt hole.**
- **Cut the nozzle of the "liquid gasket" (Three Bond 1207D or equivalent) container at its second notch. Apply "liquid gasket" about 5 mm (0.20 in.) thick.**
  Within 20 minutes after the application of fluid sealant, reassemble the components. Wait then for about 30 minutes, and pour oil in the crankcase.

(1) O-ring
(2) Oil Strainer
(3) Oil Pan

W10236610

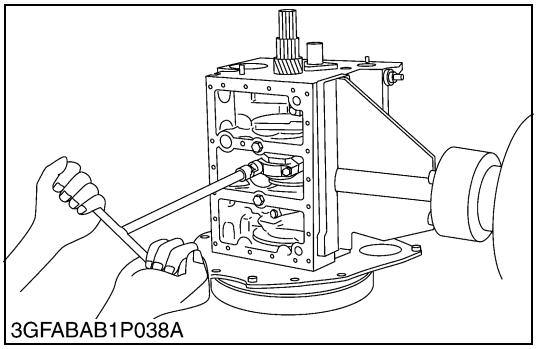
3GFABAB1P038A

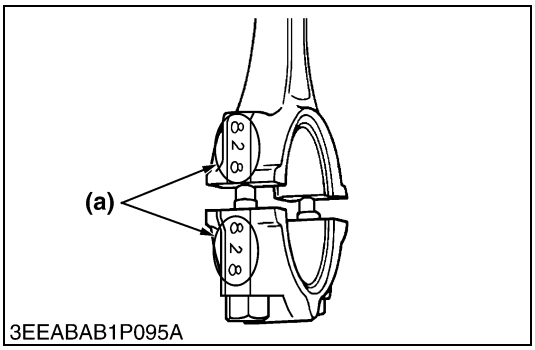

3EEABAB1P095A

Connecting Rod Cap

1. Remove the connecting rod caps.

(When reassembling)

- Align the marks **(a)** with each other. (Face the marks toward the injection pump.)
- Apply engine oil to the connecting rod screws and lightly screw it in by hand, then tighten it to the specified torque.
  If the connecting rod screw won't be screwed in smoothly, clean the threads.
  If the connecting rod screw is still hard to screw in, replace it.

Tightening torque	Connecting rod screw	41.2 to 46.1 N·m 4.2 to 4.7 kgf·m 30.3 to 33.9 ft-lbs

(a) Mark

W10242740

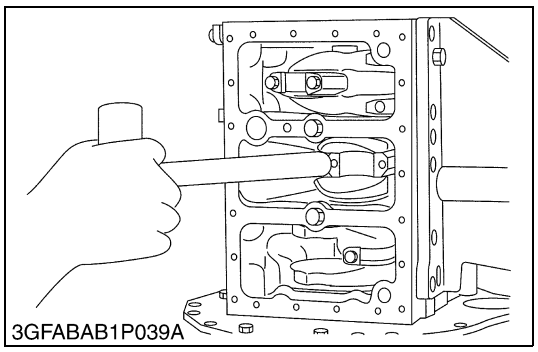
3GFABAB1P039A

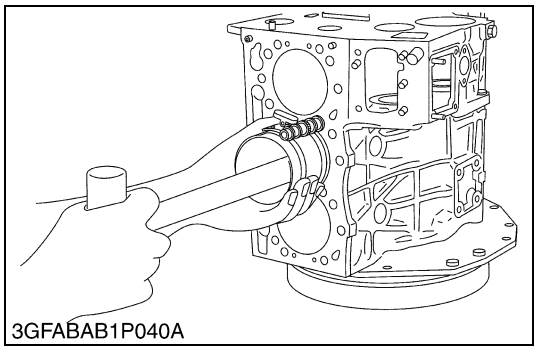
3GFABAB1P040A

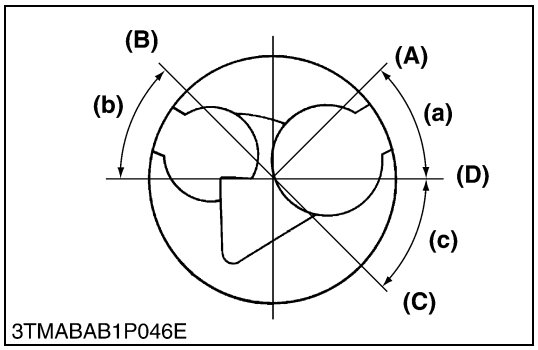

3TMABAB1P046E

Pistons

1. Turn the flywheel and bring the piston to top dead center.
2. Draw out the piston upward by lightly tapping it from the bottom of the crankcase with the grip of a hammer.
3. Draw out the other piston in the same method as above.

(When reassembling)

- Before inserting the piston into the cylinder, apply enough engine oil to the piston.
- When inserting the piston into the cylinder, face the mark on the connecting rod to the injection pump.

■ **IMPORTANT**

- **Do not change the combination of cylinder and piston. Make sure of the position of each piston by marking. For example, mark "1" on the No.1 piston.**
- **Place the piston rings with their gaps at 0.79 rad. (45 °) from the piston pin's direction as shown in the figure.**
- **Carefully insert the pistons using a piston ring compressor. Otherwise, their chrome-plated section may be scratched, causing trouble inside the cylinder.**

(A) Top Ring Gap	**(a) 0.79 rad. (45°)**
(B) Second Ring Gap	**(b) 0.79 rad. (45°)**
(C) Oil Ring Gap	**(c) 0.79 rad. (45°)**
(D) Piston Pin Hole	

W10277450

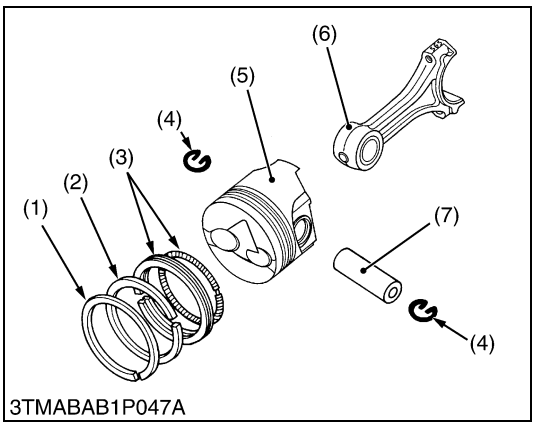

3TMABAB1P047A

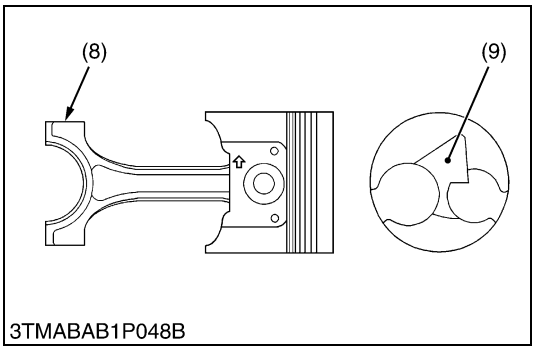

3TMABAB1P048B

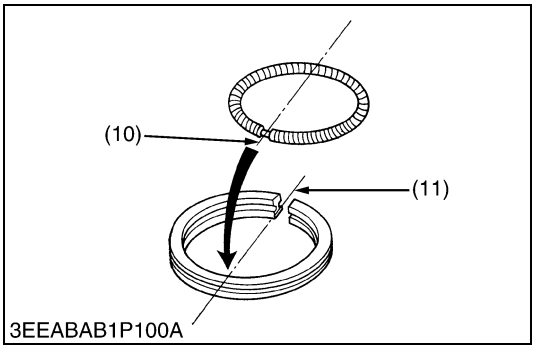

3EEABAB1P100A

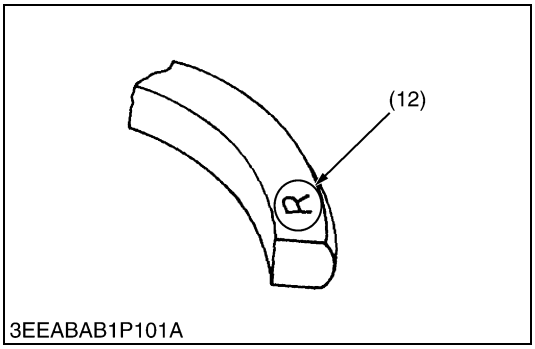

3EEABAB1P101A

Piston Ring and Connecting Rod

1. Remove the piston rings using a piston ring tool (Code No. 07909-32121).
2. Remove the piston pin (7), and separate the connecting rod (6) from the piston (5).

(When reassembling)

- When installing the ring, assemble the rings so that the manufacturer's mark (12) near the gap faces the top of the piston.
- When installing the oil ring onto the piston, place the expander joint (10) on the opposite side of the oil ring gap (11).
- Apply engine oil to the piston pin.
- When installing the connecting rod to the piston, immerse the piston in 80 °C (176 °F) oil for 10 to 15 minutes and insert the piston pin to the piston.
- When installing the connecting rod to the piston, align the alignment number mark (8) on the connecting rod to the arrow's direction of casting mark (9) on the piston.

■ **NOTE**

- **When installing the connecting rod to the piston, align the mark (8) on the connecting rod to the arrow's direction of fan-shaped concave (9) on the piston.**
- **Mark the same number on the connecting rod and the piston so as not to change the combination.**

(1) Top Ring
(2) Second Ring
(3) Oil Ring
(4) Piston Pin Snap Ring
(5) Piston
(6) Connecting Rod
(7) Piston Pin
(8) Alignment Number Mark
(9) Fan-shaped Concave
(10) Expander Joint
(11) Oil Ring Gap
(12) Manufacturer's Mark

W10281670

(D) Crankshaft

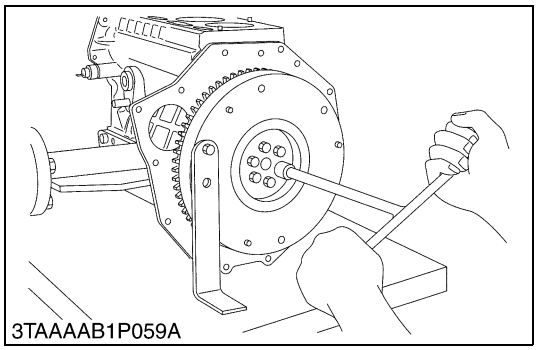
3TAAAAB1P059A

Flywheel

1. Fit the stopper to the flywheel.
2. At first, remove two pieces of the flywheel screws.
3. Insert two pieces of the flywheel guide screws in the holes.
4. Remove all flywheel screws.
5. Remove the flywheel slowly along the flywheel guide screws.

(When reassembling)

- Use two pieces of the flywheel guide screws.
- Fit the flywheel giving care to the position of the knock pin.
- Apply engine oil to the threads and the undercut surface of the flywheel bolt and fit the bolt.

Tightening torque	Flywheel screw	53.9 to 58.8 N·m 5.5 to 6.0 kgf·m 39.8 to 43.4 ft-lbs

W10290240

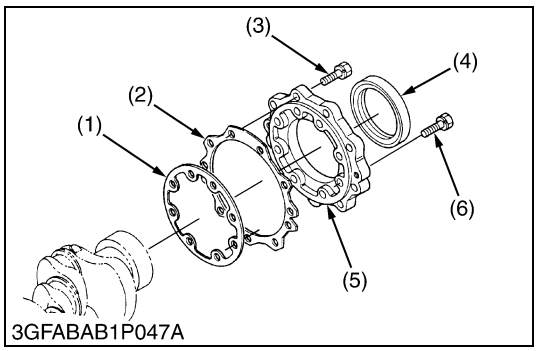

3GFABAB1P047A

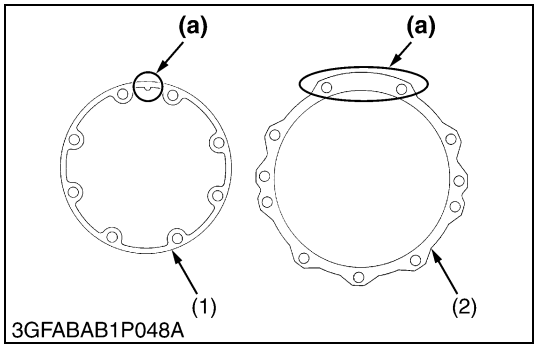

3GFABAB1P048A

Bearing Case Cover

1. Remove the bearing case cover mounting screws. First, remove inside screws (6) and then outside screws (3).
2. Screw two removed screws into the screw hole of bearing case cover (5) to remove it.

■ **IMPORTANT**

- **The length of inside screws and outside screws are different. Do not take a mistake using inside screws and outside screws.**

(When reassembling)

- Fit the bearing case gasket (1) and the bearing case cover gasket (2) with correct directions.
- Install the bearing case cover to position the casting mark **"UP"** on it upward.
- Apply engine oil to the oil seal lip and take care that it is not rolled when installing.
- Tighten the bearing case cover mounting screws with even force on the diagonal line.

Tightening torque	Bearing case cover mounting screw	9.8 to 11.3 N·m 1.00 to 1.15 kgf·m 7.2 to 8.3 ft-lbs

(1) Bearing Case Gasket
(2) Bearing Case Cover Gasket
(3) Bearing Case Cover Mounting Screw
(4) Oil Seal
(5) Bearing Case Cover
(6) Bearing Case Cover Mounting Screw
(a) Upside

W10292140

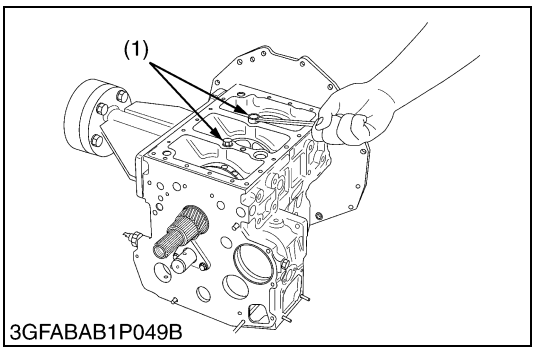

3GFABAB1P049B

Crankshaft Assembly

1. Remove the main bearing case screw 2 (1).
2. Pull out the crankshaft assembly.

■ **IMPORTANT**

- **Take care to protect crankshaft bearing 1 from scratches, caused by the crank gear, etc.. (Wrap the gear in vinyl tape, etc.)**

(When reassembling)

- Clean the oil passage of the crankshaft with compressed air.
- Apply oil to the main bearing case screw 2 (1).
- Install the crankshaft assembly, aligning the screw hole of main bearing case with the screw hole of crankcase.
- Clean the oil passage of the crankshaft with compressed air.

Tightening torque	Main bearing case screw 2	49.0 to 53.9 N·m 5.0 to 5.5 kgf·m 36.2 to 39.8 ft-lbs

(1) Main Bearing Case Screw 2

W10295750

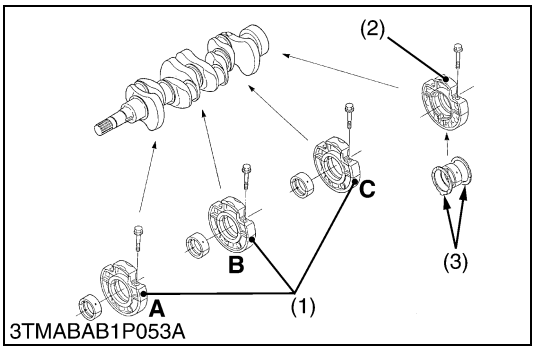

3TMABAB1P053A

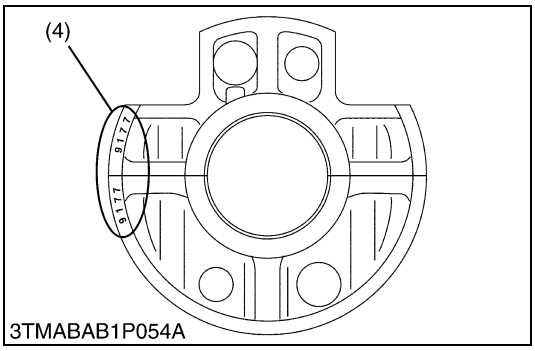

3TMABAB1P054A

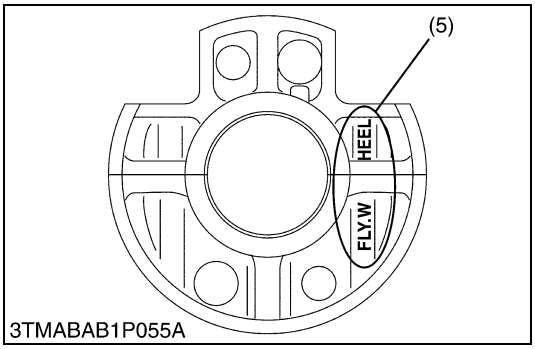

3TMABAB1P055A

Main Bearing Case Assembly

1. Remove the two main bearing case screws 1, and remove the main bearing case assembly (2) being careful with thrust bearing (3) and crankshaft bearing 2.
2. Remove the main bearing case 1 and 2 or 1, 2 and 3 as above.

(When reassembling)

- Clean the oil passage in the main bearing case.
- Apply clean engine oil on the bearings.
- Install the main bearing case assemblies in the original positions. Since diameters of main bearing cases vary, install them in order of makings (**A**, **B** or **A**, **B**, **C**) from the gear case side.
- Match the alignment numbers (4) and mark (5) on the main bearing case.
- When installing the main bearing case 1 and 2 or 1, 2 and 3, face the mark **"FLYWHEEL"** to the flywheel.
- Install the thrust bearing with its oil groove facing outward.
- Confirm that the main bearing case moves smoothly after tightening the main bearing case screw 1 to the specified torque.

Tightening torque	Main bearing case screw 1	29.4 to 34.3 N·m 3.0 to 3.5 kgf·m 21.7 to 25.3 ft-lbs

(1) [D905, D1005, D1105]
Main Bearing Case Assembly 1 and 2
[V1305]
Main Bearing Case Assembly 1, 2 and 3
(2) Main Bearing Case Assembly
(3) Thrust Bearing
(4) Alignment Number
(5) Alignment Mark

0

(3) Servicing

(A) Cylinder Head and Valves

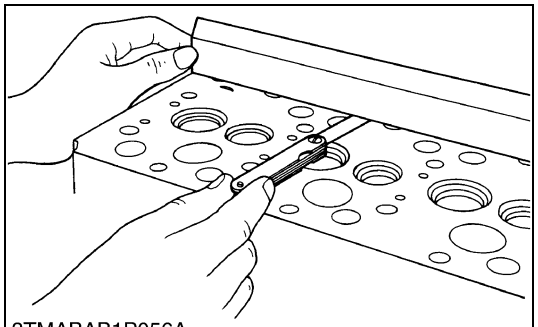

3TMABAB1P056A

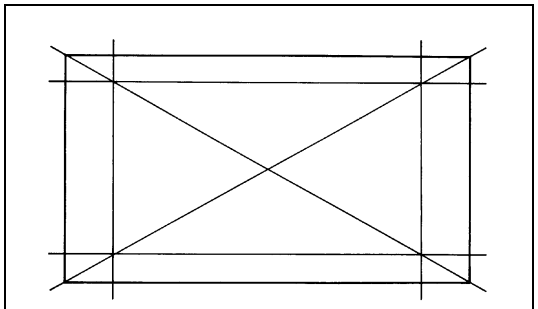

3EEABAB1P112B

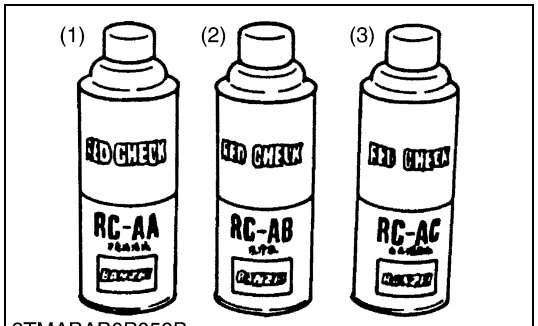

3TMABAB0P059B

Cylinder Head Surface Flatness

1. Clean the cylinder head surface.
2. Place a straightedge on the cylinder head's four sides and two diagonal as shown in the figure.
3. Measure the clearance with a feeler gauge.
4. If the measurement exceeds the allowable limit, correct it with a surface grinder.

■ **IMPORTANT**

- **Do not place the straightedge on the combustion chamber.**
- **Be sure to check the valve recessing after correcting.**

Cylinder head surface flatness	Factory spec.	0.05 mm 0.0020 in.

W10277370

Cylinder Head Flaw

1. Prepare an air spray red check (Code No. 07909-31371).
2. Clean the surface of the cylinder head with detergent (2).
3. Spray the cylinder head surface with the read permeative liquid (1). Leave it five to ten minutes after spraying.
4. Wash away the read permeative liquid on the cylinder head surface with the detergent (2).
5. Spray the cylinder head surface with white developer (3).
6. If flawed, it can be identified as red marks.

(1) Red Permeative Liquid
(2) Detergent
(3) White Developer

W10765420

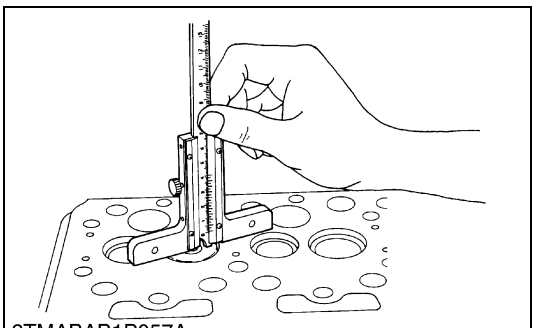
3TMABAB1P057A

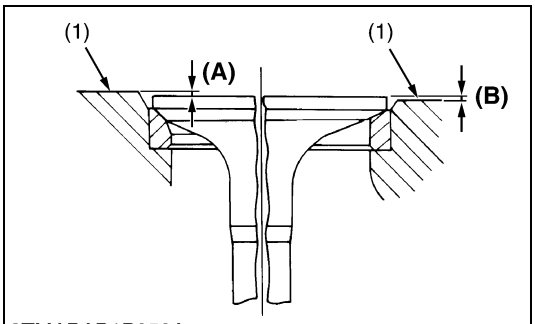

3TMABAB1P058A

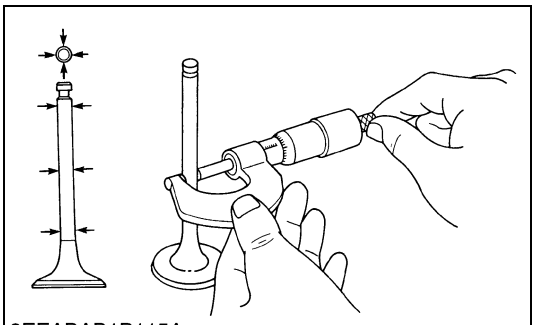
3EEABAB1P115A

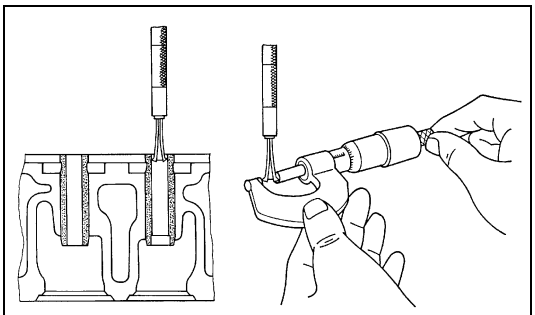
3EEABAB1P116A

Valve Recessing

1. Clean the cylinder head surface, valve face and valve seat.
2. Insert the valve into the valve guide.
3. Measure the valve recessing with a depth gauge.
4. If the measurement exceeds the allowable limit, replace the valve.
5. If it still exceeds the allowable limit after replacing the valve, correct the valve seat face of the cylinder head with a valve seat cutter (Code No. 07909-33102) or valve seat grinder.
6. Then, correct the cylinder head surface with a surface grinder, or replace the cylinder head.

Valve recessing	Factory spec.	0.05 (protrusion) to 0.15 (recessing) mm 0.0020 (protrusion) to 0.0059 (recessing) in.
	Allowable limit	0.40 (recessing) mm 0.0157 (recessing) in.

(1) Cylinder Head Surface
(A) Recessing
(B) Protrusion

W10768800

Clearance between Valve Stem and Valve Guide

1. Remove carbon from the valve guide section.
2. Measure the valve stem O.D. with an outside micrometer.
3. Measure the valve guide I.D. with a small hole gauge, and calculate the clearance.
4. If the clearance exceeds the allowable limit, replace the valves. If it still exceeds the allowable limit, replace the valve guide.

Clearance between valve stem and guide	Factory spec.	0.035 to 0.065 mm 0.00138 to 0.00256 in.
	Allowable limit	0.1 mm 0.0039 in.

Valve stem O.D.	Factory spec.	6.960 to 6.975 mm 0.27402 to 0.27461 in.
Valve guide I.D.	Factory spec.	7.010 to 7.025 mm 0.27598 to 0.27657 in.

W10774950

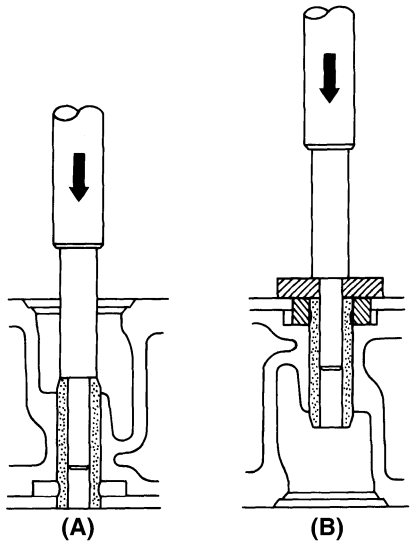

3EEABAB1P117A

Replacing Valve Guide

(When removing)

1. Press out the used valve guide using a valve guide replacing tool.

(When installing)

1. Clean a new valve guide and valve guide bore, and apply engine oil to them.
2. Press in a new valve guide using a valve guide replacing too.
3. Ream precisely the I.D. of the valve guide to the specified dimension.

Valve guide I.D. (Intake and exhaust)	Factory spec.	7.010 to 7.025 mm 0.27599 to 0.27657 in.

■ **IMPORTANT**

- **Do not hit the valve guide with a hammer during replacement.**

(A) When Removing **(B) When Installing**

W10278890

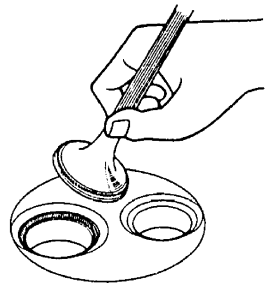
3TMABAB1P059A

Valve Seating

1. Coat the valve face lightly with prussian blue and put the valve on its seat to check the contact.
2. If the valve does not seat all the way around the valve seat or the valve contact is less than 70 %, correct the valve seating as follows.
3. If the valve contact does not comply with the reference value, replace the valve or correct the contact of valve seating.

(1) Correct
(2) Incorrect
(3) Incorrect

W10282190

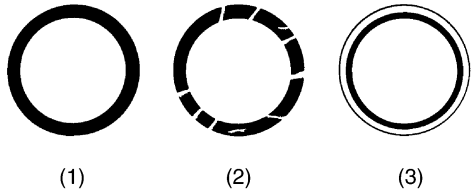

3TMABAB1P060A

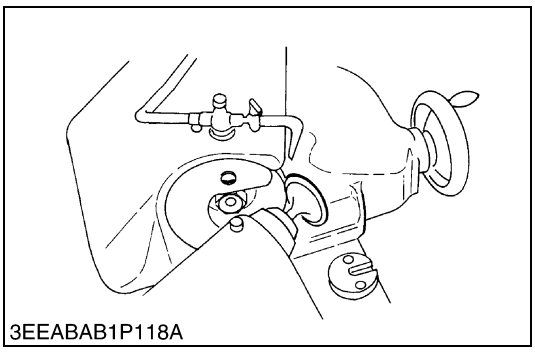
3EEABAB1P118A

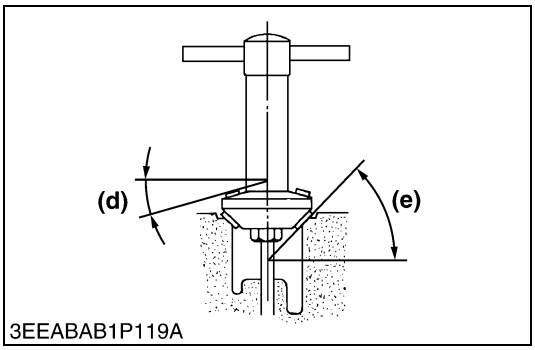

3EEABAB1P119A

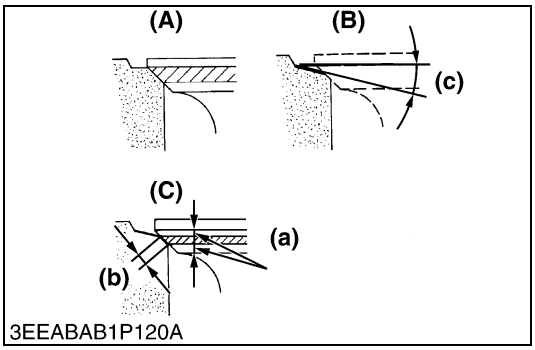

3EEABAB1P120A

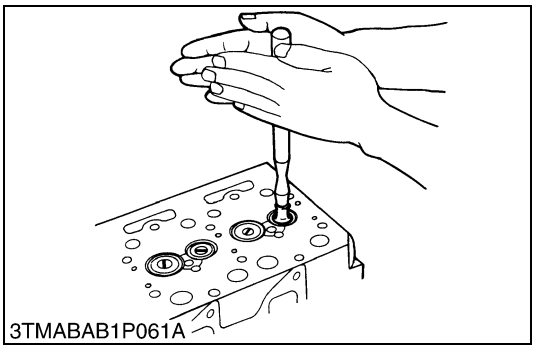
3TMABAB1P061A

Correcting Valve and Valve Seat

■ **NOTE**

- **Before correcting the valve and seat, check the valve stem and the I.D. of valve guide section, and repair them if necessary.**
- **After correcting the valve seat, be sure to check the valve recessing.**

1) Correcting Valve

1. Correct the valve with a valve refacer.

2) Correcting Valve Seat

1. Slightly correct the seat surface with a 1.047 rad. (60 °) (intake valve) or 0.785 rad. (45 °) (exhaust valve) seat cutter (Code No. 07909-33102).
2. Resurface the seat surface with a 0.523 rad. (30 °) valve seat cutter to intake valve seat and with a 0.262 rad. (15 °) valve seat cutter to exhaust valve seat so that the width is close to specified valve seat width (2.12 mm, 0.0835 in.)
3. After resurfacing the seat, inspect for even valve seating, apply a thin film of compound between the valve face and valve seat, and fit them with valve lapping tool.
4. Check the valve seating with prussian blue. The valve seating surface should show good contact all the way around.

(a) Identical Dimensions	**(A) Check Contact**
(b) Valve Seat Width	**(B) Correct Seat Width**
(c) 0.523 rad. (30 °) or 0.262 rad. (15 °)	**(C) Check Contact**
(d) 0.262 rad. (15 °) or 0.523 rad. (30 °)	
(e) 0.785 rad. (45 °) or 1.047 rad. (60 °)	

W10283500

Valve Lapping

1. Apply compound evenly to the valve lapping surface.
2. Insert the valve into the valve guide. Lap the valve onto its seat with a valve flapper or screwdriver.
3. After lapping the valve, wash the compound away and apply oil, then repeat valve lapping with oil.
4. Apply prussian blue to the contact surface to check the seated rate. If it is less than 70 %, repeat valve lapping again.

■ **IMPORTANT**

- **When valve lapping is performed, be sure to check the valve recessing and adjust the valve clearance after assembling the valve.**

W10288140

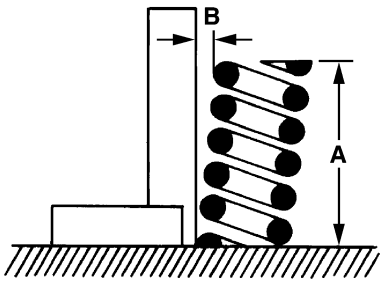

3EEABAB1P121A

Free Length and Tilt of Valve Spring

1. Measure the free length **(A)** of valve spring with vernier calipers. If the measurement is less than the allowable limit, replace it.
2. Put the valve spring on a surface plate, place a square on the side of the valve spring.
3. Check to see if the entire side is in contact with the square. Rotate the valve spring and measure the maximum tilt **(B)**. Check the entire surface of the valve spring for scratches. If there is any defect, replace it.

Free length **(A)**	Factory spec.	37.0 to 37.5 mm 1.457 to 1.456 in.
	Allowable limit	36.5 mm 1.437 in.

Tilt **(B)**	Allowable limit	1.0 mm 0.039 in.

W10289350

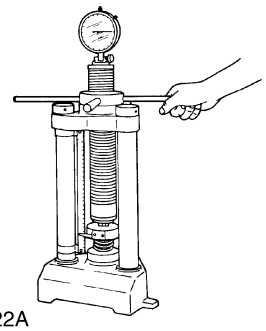
3EEABAB1P122A

Valve Spring Setting Load

1. Place the valve spring on a tester and compress it to the same length it is actually compressed in the engine.
2. Read the compression load on the gauge.
3. If the measurement is less than the allowable limit, replace it.

Setting load / Setting length	Factory spec.	117.6 N / 31.0 mm 12.0 kgf / 31.0 mm 26.4 lbs / 1.220 in.
	Allowable limit	100.0 N / 31.0 mm 10.2 kgf / 31.0 mm 22.5 lbs / 1.220 in.

W10784360

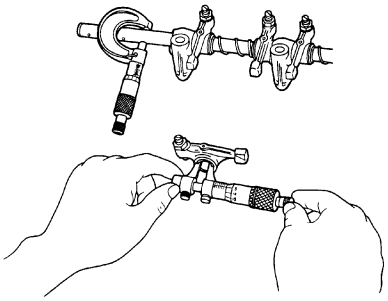
3EEABAB1P123A

Oil Clearance between Rocker Arm and Rocker Arm Shaft

1. Measure the rocker arm shaft O.D. with an outside micrometer.
2. Measure the rocker arm I.D. with an inside micrometer, and then calculate the oil clearance.
3. If the oil clearance exceeds the allowable limit, replace the rocker arm and measure the oil clearance again. If it still exceeds the allowable limit, replace also the rocker arm shaft.

Oil clearance between rocker arm and rocker arm shaft	Factory spec.	0.016 to 0.045 mm 0.00063 to 0.00177 in.
	Allowable limit	0.10 mm 0.0039 in.

Rocker arm shaft O.D.	Factory spec.	11.973 to 11.984 mm 0.47138 to 0.47181 in.
Rocker arm I.D.	Factory spec.	12.000 to 12.018 mm 0.47244 to 0.47315 in.

W10291500

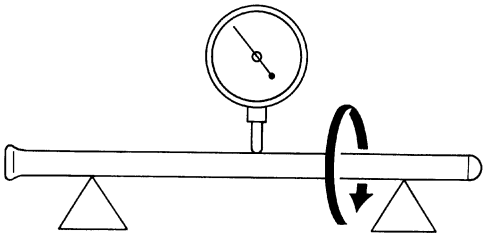
3TMABAB1P062A

Push Rod Alignment

1. Place the push rod on V blocks.
2. Measure the push rod alignment.
3. If the measurement exceeds the allowable limit, replace the push rod.

Push rod alignment	Allowable limit	0.25 mm 0.0098 in.

W10292900

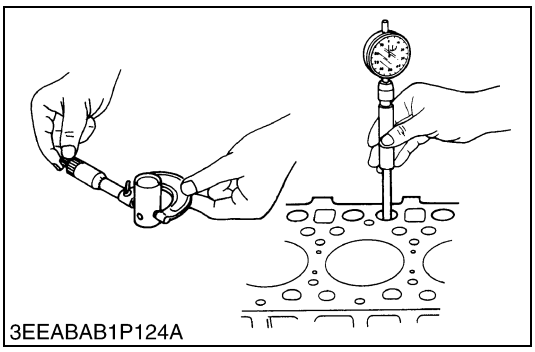

Oil Clearance between Tappet and Tappet Guide Bore

1. Measure the tappet O.D. with an outside micrometer.
2. Measure the I.D. of the tappet guide bore with a cylinder gauge, and calculate the oil clearance.
3. If the oil clearance exceeds the allowable limit or the tappet is damaged, replace the tappet.

Oil Clearance between tappet and tappet guide bore	Factory spec.	0.020 to 0.062 mm 0.00079 to 0.00244 in.
	Allowable limit	0.07 mm 0.0028 in.

Tappet O.D.	Factory spec.	19.959 to 19.980 mm 0.78579 to 0.78661 in.
Tappet guide bore I.D.	Factory spec.	20.000 to 20.021 mm 0.78740 to 0.78823 in.

W10293660

(B) Timing Gears, Camshaft and Fuel Camshaft

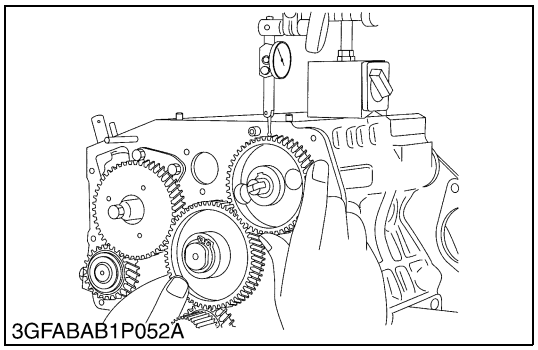

Timing Gear Backlash

1. Set a dial indicator (lever type) with its tip on the gear tooth.
2. Move the gear to measure the backlash, holding its mating gear.
3. If the backlash exceeds the allowable limit, check the oil clearance of the shafts and the gear.
4. If the oil clearance is proper, replace the gear.

[D905, D1005, D1105]

Backlash between idle gear and crank gear	Factory spec.	0.032 to 0.115 mm 0.00126 to 0.00453 in.
	Allowable limit	0.15 mm 0.0059 in.
Backlash between idle gear and cam gear	Factory spec.	0.036 to 0.114 mm 0.00142 to 0.00449 in.
	Allowable limit	0.15 mm 0.0059 in.
Backlash between idle gear and injection pump gear	Factory spec.	0.034 to 0.116 mm 0.00134 to 0.00457 in.
	Allowable limit	0.15 mm 0.0059 in.
Backlash between injection pump gear and governor gear	Factory spec.	0.030 to 0.117 mm 0.00118 to 0.00461 in.
	Allowable limit	0.15 mm 0.0059 in.

[V1305]

Backlash between idle gear 1 and crank gear	Factory spec.	0.032 to 0.115 mm 0.00126 to 0.00453 in.
	Allowable limit	0.15 mm 0.0059 in.
Backlash between idle gear 1 and cam gear	Factory spec.	0.036 to 0.114 mm 0.00142 to 0.00449 in.
	Allowable limit	0.15 mm 0.0059 in.
Backlash between idle gear 1 and injection pump gear	Factory spec.	0.034 to 0.116 mm 0.00134 to 0.00457 in.
	Allowable limit	0.15 mm 0.0059 in.
Backlash between idle gear 1 and idle gear 2	Factory spec.	0.033 to 0.117 mm 0.00130 to 0.00461 in.
	Allowable limit	0.15 mm 0.0059 in.
Backlash between idle gear 2 and governor gear	Factory spec.	0.030 to 0.117 mm 0.00118 to 0.00461 in.
	Allowable limit	0.15 mm 0.0059 in.

W10280630

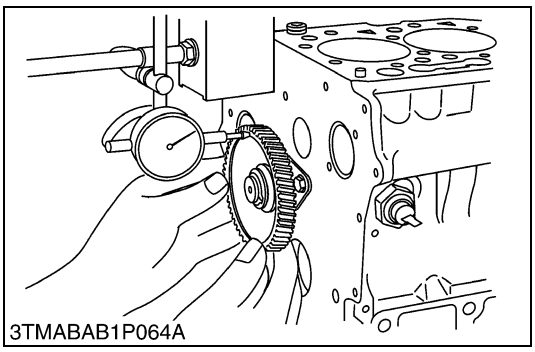
3TMABAB1P064A

Idle Gear Side Clearance

1. Set a dial indicator with its tip on the idle gear.
2. Measure the side clearance by moving the idle gear to the front and rear.
3. If the measurement exceeds the allowable limit, replace the idle gear collar.

Idle gear side clearance (D905, D1005, D1105)	Factory spec.	0.20 to 0.51 mm 0.0079 to 0.0200 in.
	Allowable limit	0.8 mm 0.0315 in.

Idle gear 1 side clearance (V1305)	Factory spec.	0.05 to 0.15 mm 0.0020 to 0.0059 in.

W10285590

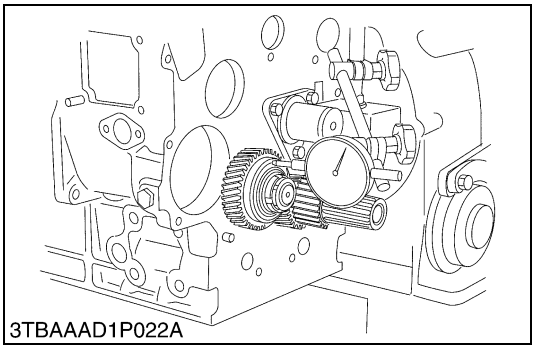
3TBAAAD1P022A

Idle Gear 2 Side Clearance (V1305)

1. Set a dial indicator with its tip on the idle gear.
2. Measure the side clearance by moving the idle gear to the front and rear.
3. If the measurement exceeds the allowable limit, replace the idle gear collar.

Idle gear 2 side clearance	Factory spec.	0.20 to 0.51 mm 0.0079 to 0.0201 in.
	Allowable limit	0.9 mm 0.0354 in.

W10287440

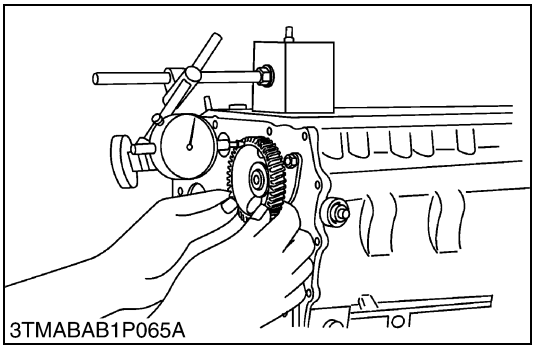
3TMABAB1P065A

Camshaft Side Clearance

1. Set a dial indicator with its tip on the camshaft.
2. measure the side clearance by moving the cam gear to the front to rear.
3. If the measurement exceeds the allowable limit, replace the camshaft stopper.

Camshaft side clearance	Factory spec.	0.07 to 0.22 mm 0.0028 to 0.0087 in.
	Allowable limit	0.30 mm 0.0118 in.

W10295630

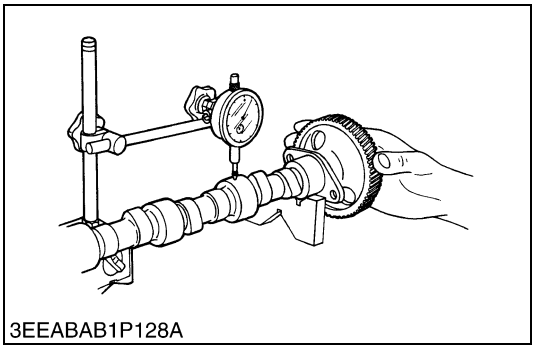
3EEABAB1P128A

Camshaft Alignment

1. Support the camshaft with V blocks on the surface plate at both end journals.
2. Set a dial indicator with its tip on the intermediate journal.
3. Measure the camshaft alignment.
4. If the measurement exceeds the allowable limit, replace the camshaft.

Camshaft alignment	Allowable limit	0.01 mm 0.0004 in.

W10296710

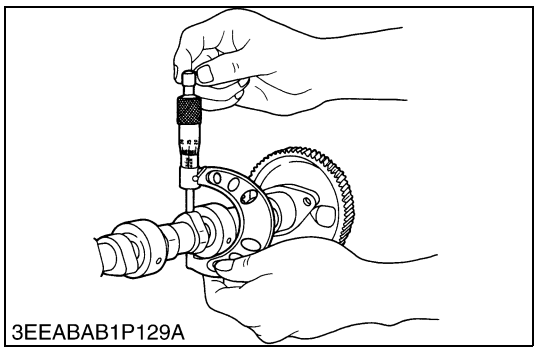
3EEABAB1P129A

Cam Height

1. Measure the height of the cam at its highest point with an outside micrometer.
2. If the measurement is less than the allowable limit, replace the camshaft.

Cam height of intake	Factory spec.	28.80 mm 1.1339 in.
	Allowable limit	28.75 mm 1.1319 in.

Cam height of exhaust	Factory spec.	29.00 mm 1.1417 in.
	Allowable limit	28.95 mm 1.1398 in.

W10297880

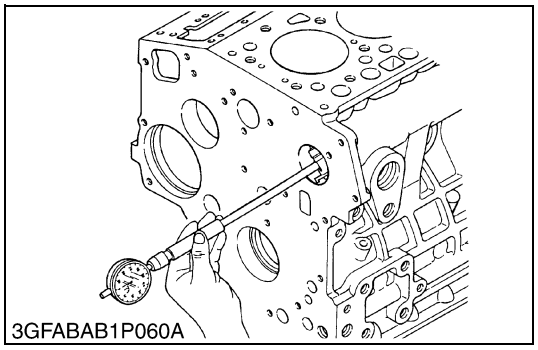
3GFABAB1P060A

Oil Clearance of Camshaft Journal

1. Measure the camshaft journal O.D. with an outside micrometer.
2. Measure the cylinder block bore I.D. for camshaft with a cylinder gauge, and calculate the oil clearance.
3. If the oil clearance exceeds the allowable limit, replace the camshaft.

Oil clearance of camshaft journal	Factory spec.	0.050 to 0.091 mm 0.00197 to 0.00358 in.
	Allowable limit	0.15 mm 0.0059 in.

Camshaft journal O.D.	Factory spec.	35.934 to 35.950 mm 1.41473 to 1.41535 in.
Cylinder block bore I.D.	Factory spec.	36.000 to 36.025 mm 1.41732 to 1.41830 in.

W10299330

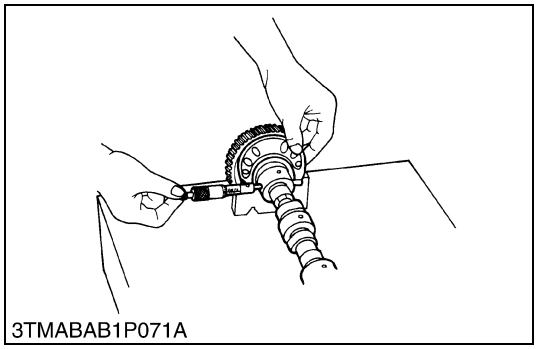
3TMABAB1P071A

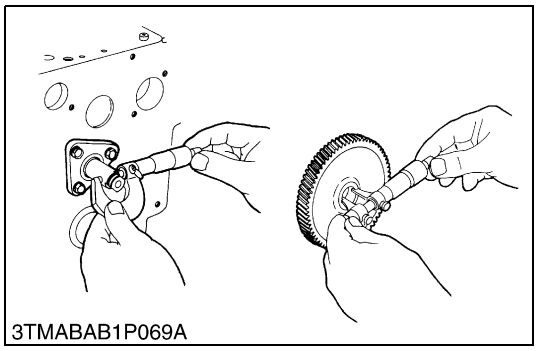
3TMABAB1P069A

Oil Clearance between Idle Gear Shaft and Idle Gear Bushing

1. Measure the idle gear shaft O.D. with an outside micrometer.
2. Measure the idle gear bushing I.D. with an inside micrometer, and calculate the oil clearance.
3. If the oil clearance exceeds the allowable limit, replace the bushing.
   If it still exceeds the allowable limit, replace the idle gear shaft.

Oil clearance between idle gear shaft and idle gear bushing	Factory spec.	0.020 to 0.054 mm 0.00079 to 0.00213 in.
	Allowable limit	0.10 mm 0.0039 in.

Idle gear shaft O.D.	Factory spec.	25.967 to 25.980 mm 1.02232 to 1.02283 in.
Idle gear bushing I.D.	Factory spec.	26.000 to 26.021 mm 1.02362 to 1.02445 in.

W10301050

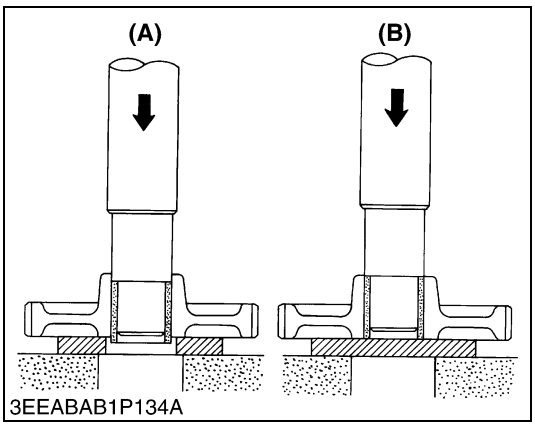

Replacing Idle Gear Bushing

(When removing)

1. Press out the used idle gear bushing using an idle gear bushing replacing tool.

(When installing)

1. Clean a new idle gear bushing and idle gear bore, and apply engine oil to them.
2. Press in a new bushing using an idle gear bushing replacing tool, until it is flush with the end of the idle gear.

(A) When Removing **(B) When Installing**

W10302410

(C) Piston and Connecting Rod

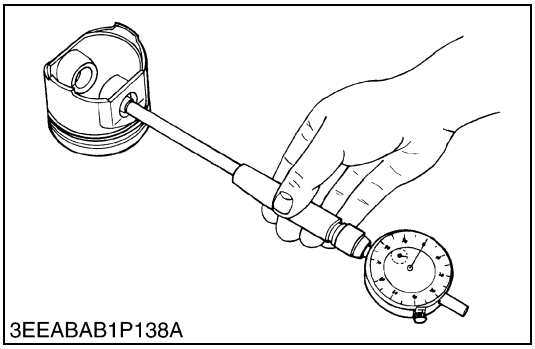

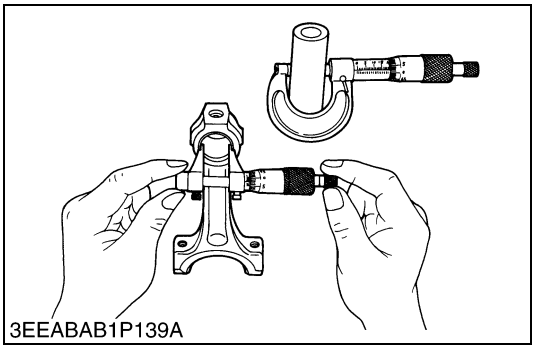

Piston Pin Bore I.D.

1. Measure the piston pin bore I.D. in both the horizontal and vertical directions with a cylinder gauge.
2. If the measurement exceeds the allowable limit, replace the piston.

Piston pin bore I.D.	Factory spec.	22.000 to 22.013 mm 0.86614 to 0.86665 in.
	Allowable limit	22.05 mm 0.8681 in.

W10304770

Oil Clearance between Piston Pin and Small End Bushing

1. Measure the piston pin O.D. where it contacts the bushing with an outside micrometer.
2. Measure the small end bushing I.D. with an inside micrometer, and calculate the oil clearance.
3. If the oil clearance exceeds the allowable limit, replace the bushing. If it still exceeds the allowable limit, replace the piston pin.

Oil clearance between piston pin and small end bushing	Factory spec.	0.014 to 0.038 mm 0.00055 to 0.00150 in.
	Allowable limit	0.15 mm 0.0059 in.

Piston pin O.D.	Factory spec.	22.002 to 22.011 mm 0.86622 to 0.86657 in.
Small end bushing I.D.	Factory spec.	22.025 to 22.040 mm 0.86713 to 0.86771 in.

W10305740

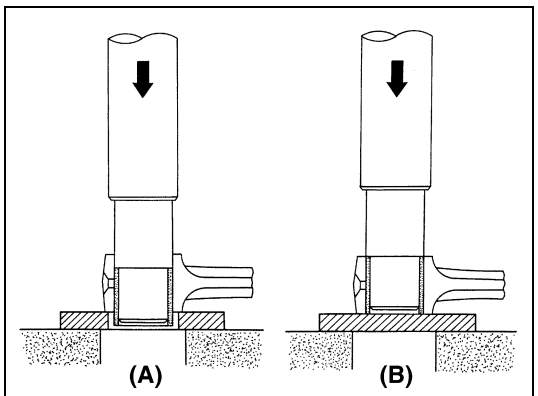

3EEABAB1P140A

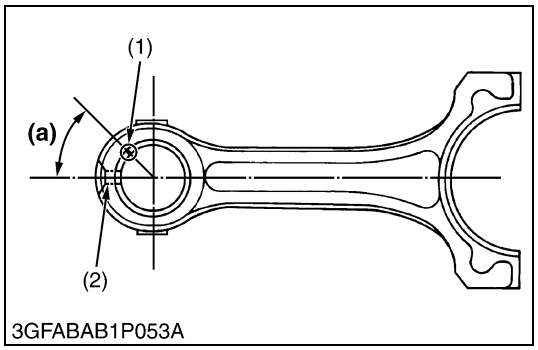

3GFABAB1P053A

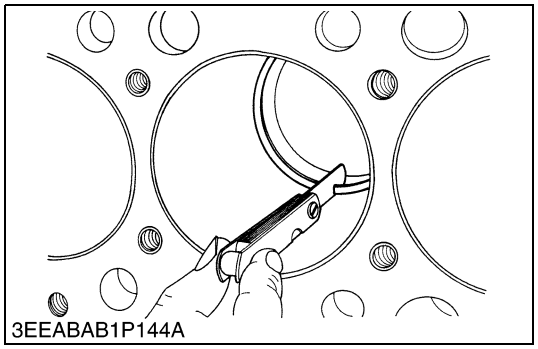
3EEABAB1P144A

Replacing Small End Bushing

(When removing)

1. Press out the used bushing using a small end bushing replacing tool.

(When installing)

1. Clean a new small end bushing and bore, and apply engine oil to them.
2. Insert a new bushing onto the tool and press-fit with a press so that the seam (1) of bushing positions as shown in the figure, until it is flash with the connecting rod.
3. Drill a hole to the bushing with aligning the oil hole (2) of connecting rod using 4.0 mm dia. (0.157 in. dia.) drill.

■ **NOTE**

- **Be sure to chamfer the oil hole circumference with an oil stone.**

(1) Seam
(2) Oil Hole

(A) When Removing
(B) When Installing
(a) 0.79 rad. (45 °)

W10307120

Piston Ring Gap

1. Insert the piston ring into the lower part of the cylinder (the least worn out part) with a piston ring compressor and piston.
2. Measure the ring gap with a feeler gauge.
3. If the measurement exceeds the allowable limit, replace the piston ring.

Piston ring gap	Top ring Second ring	Factory spec.	(D905, D1005, V1305) 0.25 to 0.40 mm 0.0098 to 0.0157 in.
			(D1105) 0.30 to 0.45 mm 0.0118 to 0.0177 in.
		Allowable limit	1.25 mm 0.0492 in.
	Oil ring	Factory spec.	0.25 to 0.45 mm 0.0098 to 0.0177 in.
		Allowable limit	1.25 mm 0.0492 in.

W10310120

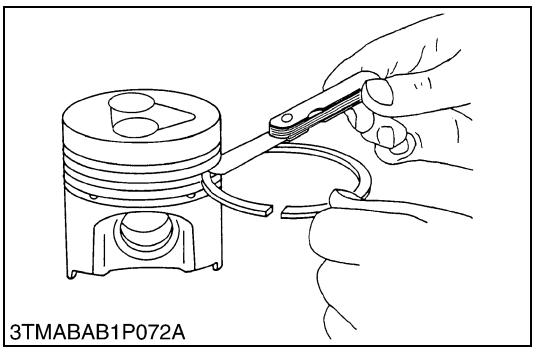
3TMABAB1P072A

Clearance between Piston ring and Piston Ring Groove

1. Clean the rings and the ring grooves, and install each ring in its groove.
2. Measure the clearance between the ring and the groove with a feeler gauge.
3. If the clearance exceeds the allowable limit, replace the piston ring.
4. If the clearance still exceeds the allowable limit with new ring, replace the piston.

Clearance between piston ring and piston ring groove	Second ring	Factory spec.	(D905, D1005, V1305) 0.085 to 0.112 mm 0.00335 to 0.00441 in.
			(D1105) 0.095 to 0.112 mm 0.00374 to 0.00441 in.
		Allowable limit	0.20 mm 0.0079 in.
	Oil ring	Factory spec.	0.020 to 0.055 mm 0.00079 to 0.00217 in.
		Allowable limit	0.15 mm 0.0059 in.

W10312390

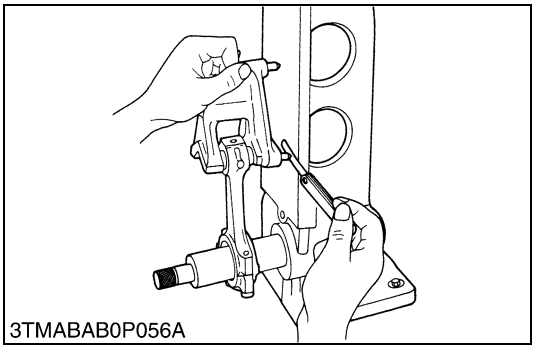
3TMABAB0P056A

Connecting Rod Alignment

1. Remove the crankpin bearing, and install the connecting rod cap.
2. Install the piston pin in the connecting rod.
3. Install the connecting rod on the connecting rod alignment tool (Code No. 07909-31661).
4. Put a gauge over the piston pin, and move it against the face plate.
5. If the gauge does not fit squarely against the face plate, measure the space between the pin of the gauge and the face plate.
6. If the measurement exceeds the allowable limit, replace the connecting rod.

Space between gauge pin and face plate	Allowable limit	0.05 mm 0.0020 in.

W10314620

(D) Crankshaft

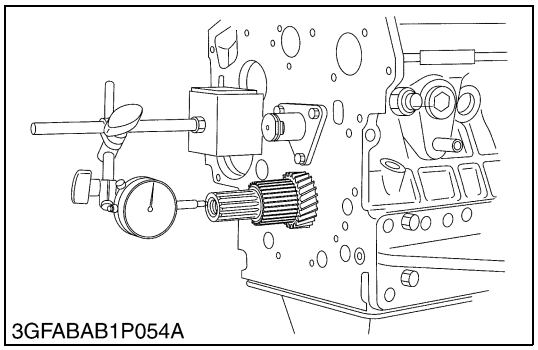
3GFABAB1P054A

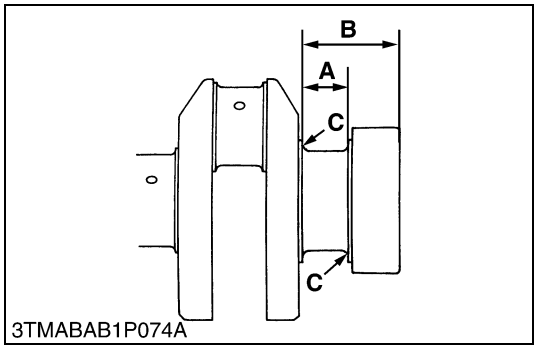

3TMABAB1P074A

Crankshaft Side Clearance

1. Set a dial indicator with its tip on the end of the crankshaft.
2. Measure the side clearance by moving the crankshaft to the front and rear.
3. If the measurement exceeds the allowable limit, replace the thrust bearings.
4. If the same size bearing is useless because of the crankshaft journal wear, replace it with an oversize one referring to the table and figure.

Crankshaft side clearance	Factory spec.	0.15 to 0.31 mm 0.0059 to 0.0122 in.
	Allowable limit	0.50 mm 0.0197 in.

(Reference)

- Oversize thrust bearing

Oversize	Bearing	Code Number	Marking
0.2 mm 0.008 in.	Thrust bearing 1 02	15521-23951	020 OS
	Thrust bearing 2 02	19202-23971	020 OS
0.4 mm 0.016 in.	Thrust bearing 1 04	15521-23961	040 OS
	Thrust bearing 2 04	19202-23981	040 OS

- Oversize dimensions of crankshaft journal

Oversize / Dimension	0.2 mm 0.008 in.	0.4 mm 0.016 in.
A	28.20 to 28.25 mm 1.1102 to 1.1122 in.	28.40 to 28.45 mm 1.1181 to 1.1201 in.
B	51.5 to 51.7 mm 2.028 to 2.035 in.	51.6 to 51.8 mm 2.031 to 2.039 in.
C	2.3 to 2.7 mm radius 0.091 to 0.106 in. radius	2.3 to 3.7 mm radius 0.091 to 0.106 in. radius
The crankshaft journal must be fine-finished to higher than ∇∇∇∇ (0.8-S)		

W10317070

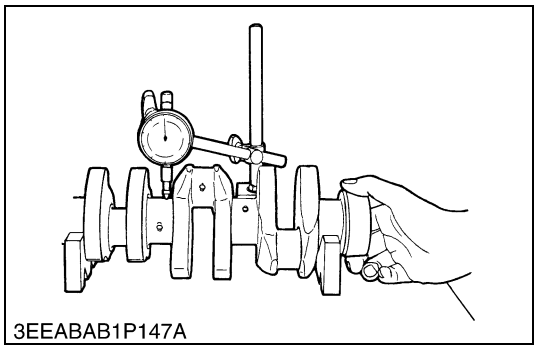
3EEABAB1P147A

Crankshaft Alignment

1. Support the crankshaft with V blocks on the surface plate at both end journals.
2. Set a dial indicator with its tip on the intermediate journal.
3. Measure the crankshaft alignment.
4. If the measurement exceeds the allowable limit, replace the crankshaft.

Crankshaft alignment	Allowable limit	0.02 mm 0.0008 in.

W10330010

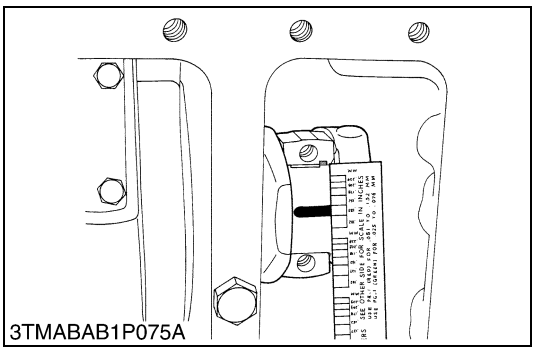
3TMABAB1P075A

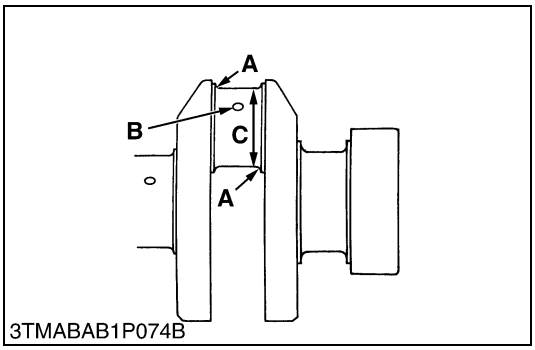

3TMABAB1P074B

Oil Clearance between Crankpin and Crankpin Bearing

1. Clean the crankpin and crankpin bearing.
2. Put a strip of plastigage (Code No.: 07909-30241) on the center of the crankpin.
3. Install the connecting rod cap and tighten the connecting rod screws to the specified torque, and remove the cap again.
4. Measure the amount of the flattening with the scale, and get the oil clearance.
5. If the oil clearance exceeds the allowable limit, replace the crankpin bearing.
6. If the same size bearing is useless because of the crankpin wear, replace it with an undersize one referring to the table and figure.

■ **NOTE**
- **Never insert the plastigage into the crankpin oil hole.**
- **Be sure not to move the crankshaft while the connecting rod screws are tightened.**

Oil clearance between crankpin and crankpin bearing	Factory spec.	0.029 to 0.091 mm 0.00114 to 0.00358 in.
	Allowable limit	0.20 mm 0.0079 in.

Crankpin O.D.	Factory spec.	39.959 to 39.975 mm 1.57319 to 1.57382 in.
Crankpin bearing I.D.	Factory spec.	40.004 to 40.050 mm 1.57496 to 1.57677 in.

(Reference)
- Undersize crankpin bearing

Undersize	Bearing	Code Number	Marking
0.2 mm 0.008 in.	Crankpin bearing 02	16241-22971	020 US
0.4 mm 0.016 in.	Crankpin bearing 04	16241-22981	040 US

- Undersize dimensions of crankpin

Undersize / Dimension	0.2 mm 0.008 in.	0.4 mm 0.016 in.
A	2.8 to 3.2 mm radius 0.1102 to 0.1260 in. radius	2.8 to 3.2 mm radius 0.1102 to 0.1260 in. radius
B	1.0 to 1.5 mm radius 0.0394 to 0.0591 in. radius	1.0 to 1.5 mm radius 0.0394 to 0.0591 in. radius
C	39.759 to 39.775 mm 1.56531 to 1.56594 in.	39.559 to 39.575 mm 1.55744 to 1.55807 in.
The crankpin must be fine-finished to higher than ∇∇∇∇ (0.8-S)		

W10331060

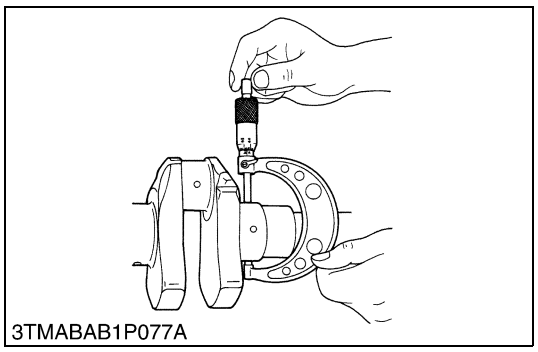
3TMABAB1P077A

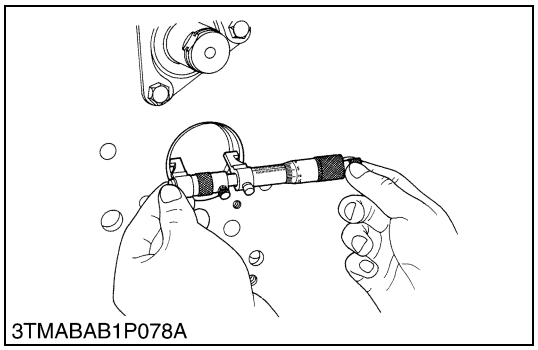
3TMABAB1P078A

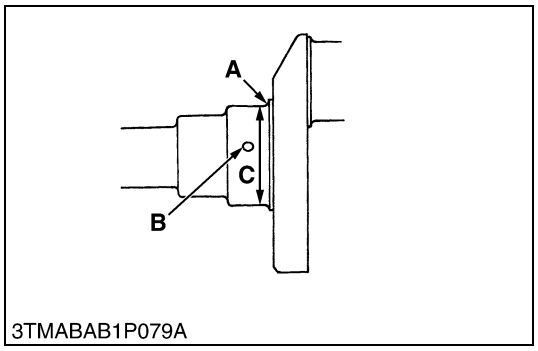

3TMABAB1P079A

Oil Clearance between Crankshaft Journal and Crankshaft Bearing 1

1. Measure the O.D. of the crankshaft front journal with an outside micrometer.
2. Measure the I.D. of the crankshaft bearing 1 with an inside micrometer, and calculate the oil clearance.
3. If the clearance exceeds the allowable limit, replace the crankshaft bearing 1.
4. If the same size bearing is useless because of the crankshaft journal wear, replace it with an undersize one referring to the table and figure.

Oil clearance between crankshaft journal and crankshaft bearing 1	Factory spec.	0.034 to 0.114 mm 0.00134 to 0.00449 in.
	Allowable limit	0.20 mm 0.0079 in.

Crankshaft journal O.D.	Factory spec.	47.934 to 47.950 mm 1.88716 to 1.88779 in.
Crankshaft bearing 1 I.D.	Factory spec.	47.984 to 48.048 mm 1.88913 to 1.89165 in.

(Reference)

- Undersize crankshaft bearing 1

Undersize	Bearing	Code Number	Marking
0.2 mm 0.008 in.	Crankshaft bearing 1 02	16241-23911	020 US
0.4 mm 0.016 in.	Crankshaft bearing 1 04	16241-23921	040 US

- Undersize dimensions of crankshaft journal

Undersize / Dimension	0.2 mm 0.008 in.	0.4 mm 0.016 in.
A	2.3 to 2.7 mm radius 0.0906 to 0.1063 in. radius	2.3 to 2.7 mm radius 0.0906 to 0.1063 in. radius
B	1.0 to 1.5 mm radius 0.0394 to 0.0591 in. radius	1.0 to 1.5 mm radius 0.0394 to 0.0591 in. radius
C	47.734 to 47.750 mm 1.87929 to 1.87992 in.	47.534 to 47.550 mm 1.87142 to 1.87204 in.
The crankshaft journal must be fine-finished to higher than ∇∇∇∇ (0.8-S)		

W10337170

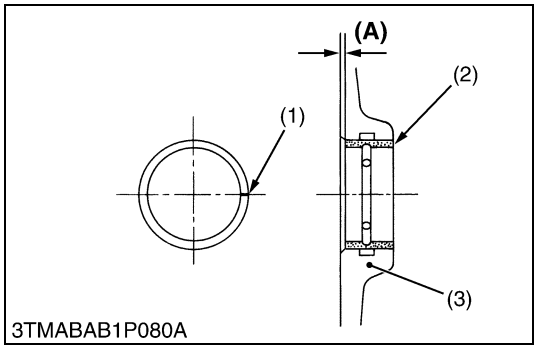

3TMABAB1P080A

Replacing Crankshaft Bearing 1

(When removing)

1. Press out the used crankshaft bearing 1 using a crankshaft bearing 1 replacing tool.

(When installing)

1. Clean a new crankshaft bearing 1 and crankshaft journal bore, and apply engine oil to them.
2. Using a crankshaft bearing 1 replacing tool, press in a new bearing 1 (2) so that its seam (1) directs toward the exhaust manifold side. (See figure.)

Dimension **(A)**	Factory spec.	0 to 0.3 mm 0 to 0.0118 in.

(1) Seam
(2) Crankshaft Bearing 1
(3) Cylinder Block

W10339460

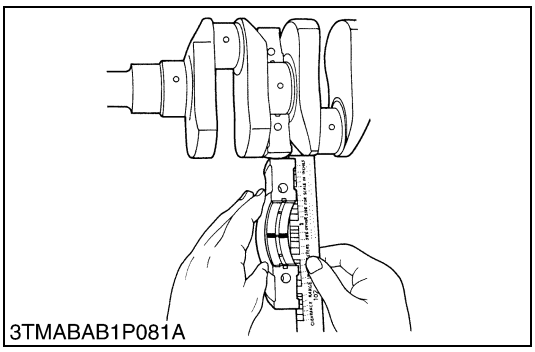
3TMABAB1P081A

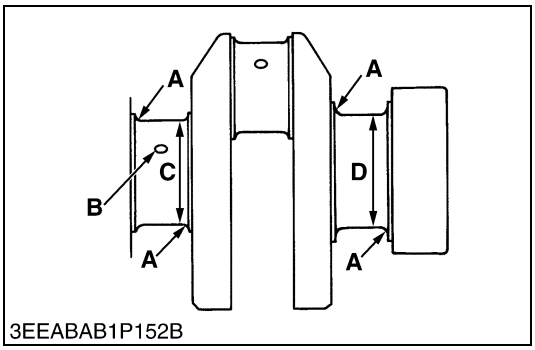

3EEABAB1P152B

Oil Clearance between Crankshaft Journal and Crankshaft Bearing 2 (Crankshaft Bearing 3)

1. Put a strip of plastigage (Code No. 07909-30241) on the center of the journal.
2. Install the bearing case and tighten the baring case screws 1 to the specified torque, and remove the bearing case again.
3. Measure the amount of the flattening with the scale and get the oil clearance.
4. If the clearance exceeds the allowable limit, replace the crankshaft bearing 2 (crankshaft bearing 3).
5. If the same size bearing is useless because of the crankshaft journal wear, replace it with an undersize one referring to the table and figure.

■ **NOTE**

- **Be sure not to move the crankshaft while the bearing case screws are tightened.**

Oil clearance between crankshaft journal and crankshaft bearing 2	Factory spec.	0.034 to 0.095 mm 0.00134 to 0.00374 in.
	Allowable limit	0.20 mm 0.0079 in.

Crankshaft journal O.D. (Intermediate)	Factory spec.	47.934 to 47.950 mm 1.88716 to 1.88779 in.
Crankshaft bearing 2 I.D.	Factory spec.	47.984 to 48.029 mm 1.88913 to 1.89091 in.

Oil clearance between crankshaft journal and crankshaft bearing 3	Factory spec.	0.034 to 0.098 mm 0.00134 to 0.00386 in.
	Allowable limit	0.20 mm 0.0079 in.

Crankshaft journal O.D. (Flywheel side)	Factory spec.	51.921 to 51.940 mm 2.04413 to 2.04488 in.
Crankshaft bearing 3 I.D.	Factory spec.	51.974 to 52.019 mm 2.04622 to 2.04799 in.

W10340750

(E) Cylinder

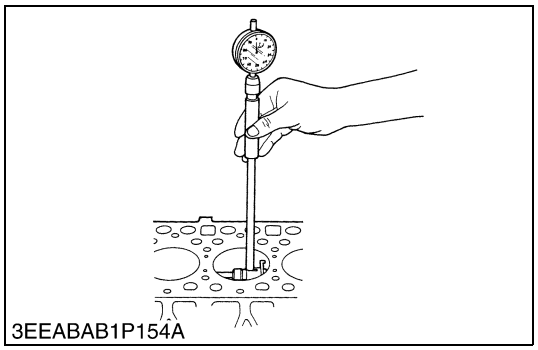
3EEABAB1P154A

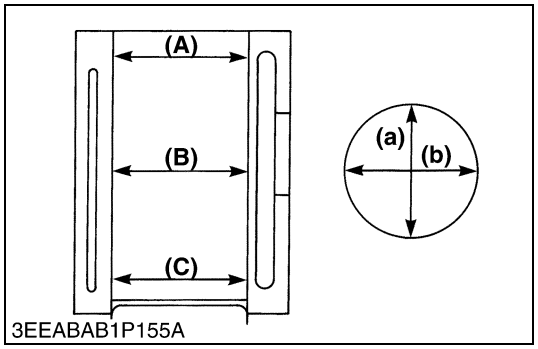

3EEABAB1P155A

Cylinder Wear

1. Measure the I.D. of the cylinder at the six positions (see figure) with a cylinder gauge to find the maximum and minimum I.D.'s.
2. Get the difference (Maximum wear) between the maximum and the minimum I.D.'s.
3. If the wear exceeds the allowable limit, bore and hone to the oversize dimension. (Refer to **"Correcting Cylinder"**.)
4. Visually check the cylinder wall for scratches. If deep scratches are found, the cylinder should be bored. (Refer to **"Correcting Cylinder"**.)

[D905]

Cylinder liner I.D.	Factory spec.	72.000 to 72.019 mm 2.83464 to 2.83539 in.
	Allowable limit	72.169 mm 2.84129 in.

[D1005, V1305]

Cylinder liner I.D.	Factory spec.	76.000 to 76.019 mm 2.99212 to 2.99287 in.
	Allowable limit	76.169 mm 2.99878 in.

[D1105]

Cylinder liner I.D.	Factory spec.	78.000 to 78.019 mm 3.07086 to 3.07161 in.
	Allowable limit	78.169 mm 3.07751 in.

(A) Top
(B) Middle
(C) Bottom (Skirt)
(a) Right-angled to Piston Pin
(b) Piston Pin Direction

W10343890

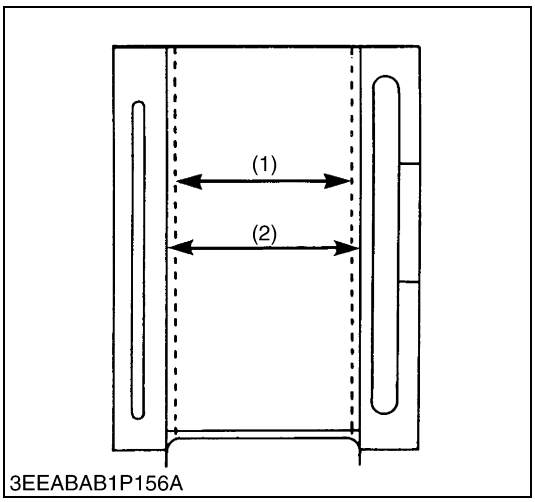

Correcting Cylinder

1. When the cylinder is worn beyond the allowable limit, bore and hone it to the specified dimension.

[D905]

Oversized cylinder liner I.D.	Factory spec.	72.500 to 72.519 mm 2.85433 to 2.85507 in.
	Allowable limit	72.669 mm 2.86098 in.
Finishing	Hone to 1.2 to 2.0 mm µR max. ∇∇∇ (0.000047 to 0.000079 in. µR max.)	

[D1005, V1305]

Oversized cylinder liner I.D.	Factory spec.	76.500 to 76.519 mm 3.01181 to 3.01255 in.
	Allowable limit	76.669 mm 3.01846 in.
Finishing	Hone to 1.2 to 2.0 mm µR max. ∇∇∇ (0.000047 to 0.000079 in. µR max.)	

[D1105]

Oversized cylinder liner I.D.	Factory spec.	78.500 to 78.519 mm 3.09055 to 3.09129 in.
	Allowable limit	78.669 mm 3.09720 in.
Finishing	Hone to 1.2 to 2.0 mm µR max. ∇∇∇ (0.000047 to 0.000079 in. µR max.)	

2. Replace the piston and piston rings with oversize ones.

[D905]

Oversize	Part Name	Code Number	Marking
0.5 mm 0.0197 in.	Piston 05	16221-21910	05 OS
	Piston ring 05 assembly	15901-21090	05 OS

[D1005, V1305]

Oversize	Part Name	Code Number	Marking
0.5 mm 0.0197 in.	Piston 05	16251-21910	05 OS
	Piston ring 05 assembly	16271-21090	05 OS

[D1105]

Oversize	Part Name	Code Number	Marking
0.25 mm 0.0098 in.	Piston	16281-21910	0.5 OS
	Piston ring assembly	16261-21090	0.5 OS

■ **NOTE**

- **When the oversize cylinder is worn beyond the allowable limit, replace the cylinder block with a new one.**

(1) Cylinder I.D. (Before Correction) (2) Oversize Cylinder I.D.

W10344480

[3] LUBRICATING SYSTEM

(1) Checking

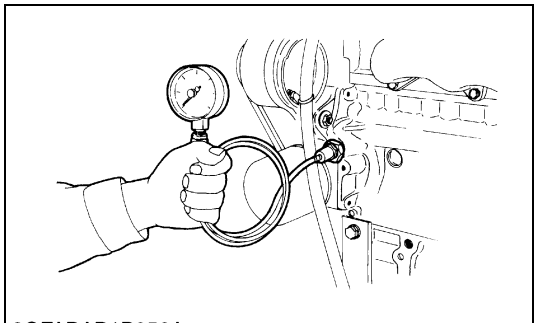
3GFABAB1P056A

Engine Oil Pressure

1. Remove the engine oil pressure switch, and set a oil pressure tester (Code No.: 07916-32032).
2. Start the engine. After warming up, measure the oil pressure of both idling and rated speeds.
3. If the oil pressure is less than the allowable limit, check the following.

- Engine oil insufficient.
- Oil pump defective
- Oil strainer clogged
- Oil filter cartridge clogged
- Oil gallery clogged
- Excessive oil clearance
- Foreign matter in the relief valve

Engine oil pressure	At idle speed	Factory spec.	More than 49 kPa 0.5 kgf/cm^2 7 psi
	At rated speed	Factory spec.	196 to 441 kPa 2.0 to 4.5 kgf/cm^2 36 to 64 psi
		Allowable limit	147 kPa 1.5 kgf/cm^2 27 psi

(When reassembling)

- After checking the engine oil pressure, tighten the engine oil pressure switch to the specified torque.

W10349520

(2) Servicing

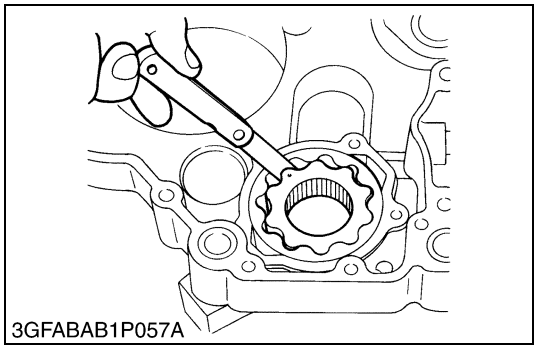
3GFABAB1P057A

Rotor Lobe Clearance

1. Measure the clearance between lobes of the inner rotor and the outer rotor with a feeler gauge.
2. If the clearance exceeds the factory specifications, replace the oil pump rotor assembly.

Rotor lobe clearance	Factory spec.	0.06 to 0.18 mm 0.0024 to 0.0071 in.

W10355630

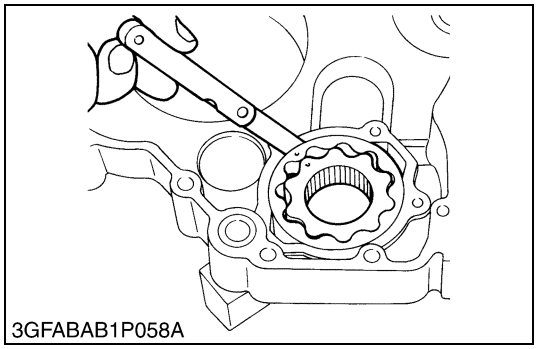
3GFABAB1P058A

Clearance between Outer Rotor and Pump Body

1. Measure the clearance between the outer rotor and the pump body with a feeler gauge.
2. If the clearance exceeds the factory specifications, replace the oil pump rotor assembly.

Clearance between outer rotor and pump body	Factory spec.	0.10 to 0.18 mm 0.0039 to 0.0071 in.

W10356560

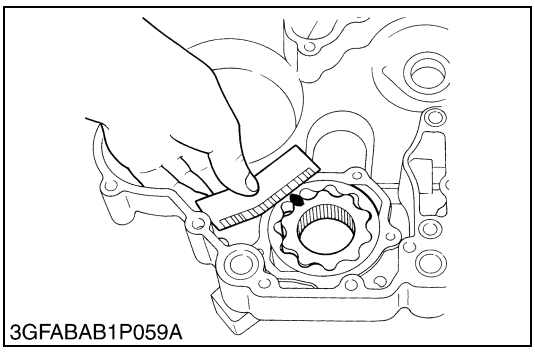
3GFABAB1P059A

Clearance between Rotor and Cover

1. Put a strip of plastigage (Code No. 07909-30241) onto the rotor face with grease.
2. Install the cover and tighten the screws.
3. Remove the cover carefully, and measure the amount of the flattening with the scale and get the clearance.
4. If the clearance exceeds the factory specifications, replace the oil pump rotor assembly.

Clearance between rotor and cover	Factory spec.	0.030 to 0.085 mm 0.00118 to 0.00335 in.

W10357320

[4] COOLING SYSTEM

(1) Checking and Adjusting

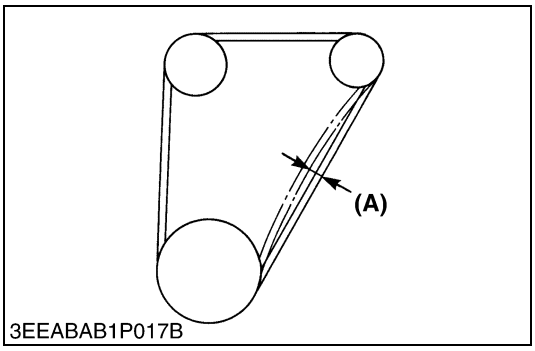

3EEABAB1P017B

Fan Belt Tension

1. Measure the deflection **(A)**, depressing the belt halfway between the fan drive pulley and alternator pulley at specified force (98 N, 10 kgf, 22 lbs).
2. If the measurement is not within the factory specifications, loosen the alternator mounting screws and relocate the alternator to adjust.

Deflection **(A)**	Factory spec.	7 to 9 mm 0.28 to 0.35 in.

W10356670

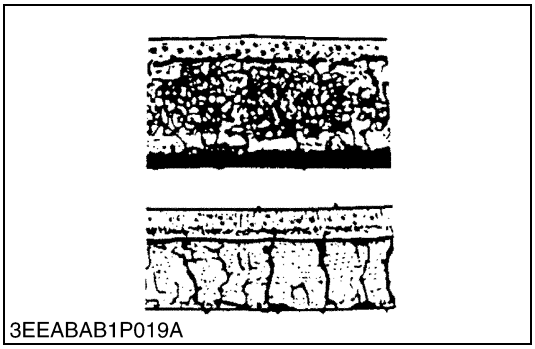
3EEABAB1P019A

Fan Belt Damage and Wear

1. Check the fan belt for damage.
2. If the fan belt is damaged, replace it.
3. Check if the fan belt is worn and sunk in the pulley groove.
4. If the fan belt is nearly worn out and deeply sunk in the pulley groove, replace it.

W10357580

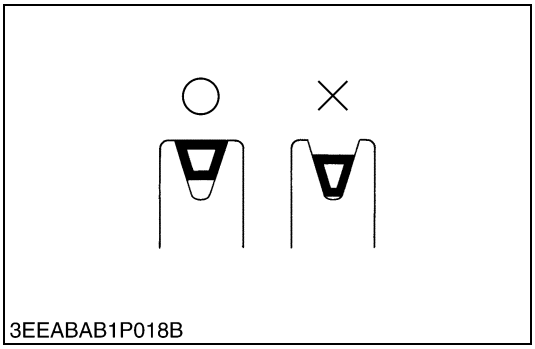
3EEABAB1P018B

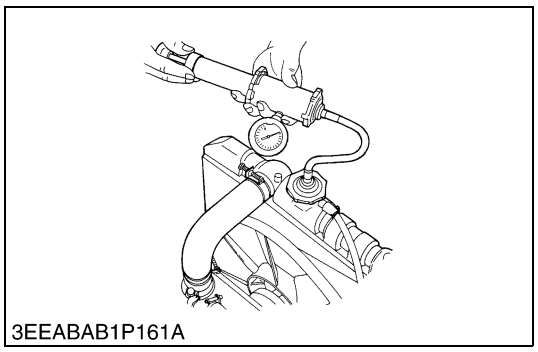
3EEABAB1P161A

Radiator Water Leakage

1. Pour a specified amount of water into the radiator.
2. Set a radiator tester (Code No. 07909-31551) and raise the water pressure to the specified pressure.
3. Check the radiator for water leaks.
4. For water leak from the pinhole, replace the radiator or repair with the radiator cement. When water leak is excessive, replace the radiator.

Radiator water leakage test pressure	Factory spec.	137 kPa 1.4 kgf/cm^2 20 psi

W10361840

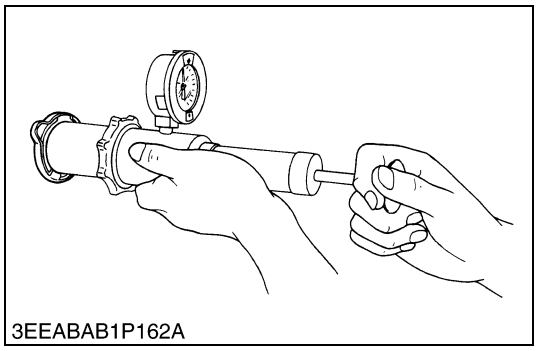
3EEABAB1P162A

Radiator Cap Air Leakage

CAUTION

- **When removing the radiator cap, wait at least ten minutes after the engine has stopped and cooled down. Otherwise, hot water way gush out, scalding nearby people.**

1. Set a radiator tester (Code No.: 07909-31551) on the radiator cap.
2. Apply the specified pressure (88 kPa, 0.9 kgf/cm^2, 13 psi), and measure the time for the pressure to fall to 59 kPa (0.6 kgf/cm^2, 9 psi).
3. If the measurement is less than the factory specification, replace the radiator cap.

Pressure falling time	Factory spec.	More than 10 seconds for pressure fall from 88 to 59 kPa (from 0.9 to 0.6 kgf/cm^2, from 13 to 9 psi)

W10360900

(2) Disassembling and Assembling

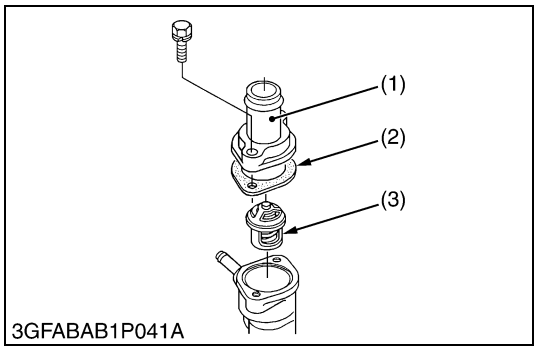

3GFABAB1P041A

Thermostat Assembly

1. Remove the thermostat cover mounting screws, and remove the thermostat cover (1).
2. Remove the thermostat assembly (3).

(When reassembling)

- Apply a liquid gasket (Three Bond 1215 or equivalent) only at the thermostat cover side of the gasket (2).

(1) Thermostat Cover
(2) Thermostat Cover Gasket
(3) Thermostat Assembly

W10363950

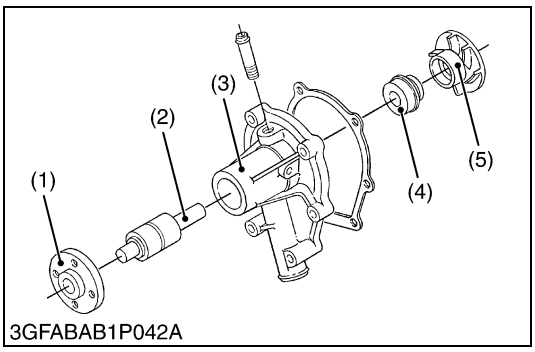

Water Pump Assembly

1. Loosen the alternator mounting bolts, and remove the fan belt.
2. Remove the fan and fan pulley.
3. Remove the water pump assembly from the gear case cover.
4. Remove the water pump flange (1).
5. Press out the water pump shaft (2) with the impeller (5) on it.
6. Remove the impeller from the water pump shaft.
7. Remove the mechanical seal (4).

(When reassembling)

- Apply a liquid gasket (Three Bond 1215 or equivalent) to the both sides of gasket.
- Replace the mechanical seal with new one.

(1) Water Pump Flange
(2) Water Pump Shaft
(3) Water Pump Body
(4) Mechanical Seal
(5) Impeller

W10365080

(3) Servicing

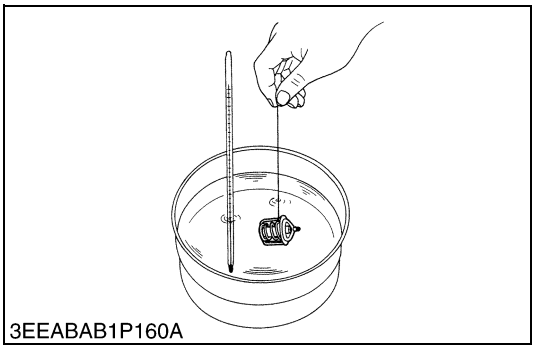

Thermostat Valve Opening Temperature

1. Suspend the thermostat in the water by a string with its end inserted between the valve and seat.
2. Heating the water gradually, read the temperature when the valve opens and leaves the string.
3. Continue heating and read the temperature when the valve opens approx. 6 mm (0.236 in.).
4. If the measurement is not within the factory specifications, replace the thermostat.

Thermostat's valve opening temperature	Factory spec.	80.5 to 83.5 °C 176.9 to 182.3 °F
Temperature at which thermostat completely opens	Factory spec.	95 °C 203 °F

W10358490

[5] FUEL SYSTEM

(1) Checking and Adjusting

(A) Injection Pump

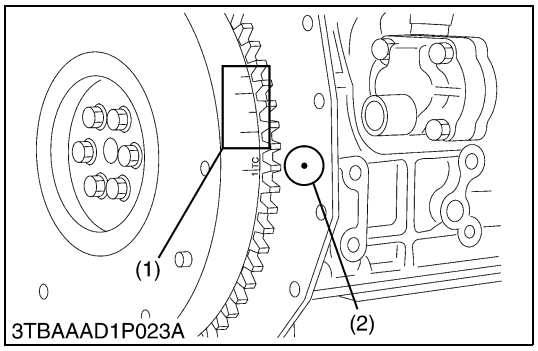

3TBAAAD1P023A

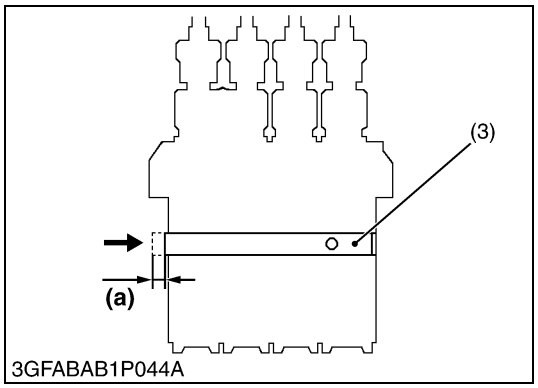

3GFABAB1P044A

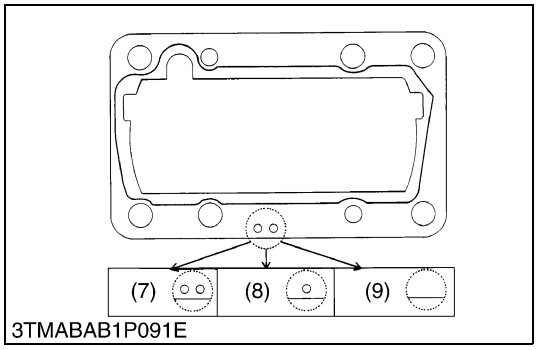

3TMABAB1P091E

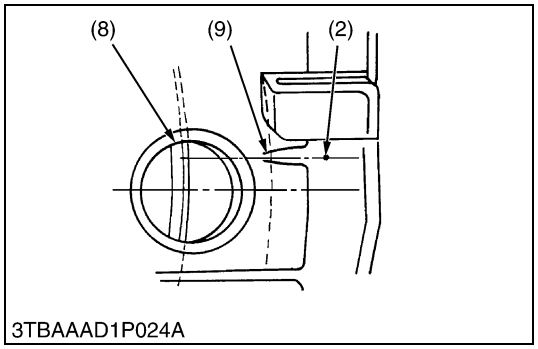

3TBAAAD1P024A

Injection Timing

1. Remove the injection pipes.
2. Remove the engine stop solenoid, push in the control rack (3) of the injection pump by 5 mm (0.2 in.) and hold it at that position.
3. Turn the flywheel counterclockwise (facing the flywheel) until fuel flows from the delivery valve holder.
4. Continue to turn the flywheel slowly, and stop it as soon as the fuel level at the tip of the delivery valve holder begins to increase.
5. Check to see if the timing angle lines on the flywheel is aligned with the alignment mark (2).
6. If the injection timing is out of adjustment, readjust the timing with shims.

Injection timing	Factory spec.	0.31 to 0.35 rad. (18 to 20 °) before T.D.C.

■ **NOTE**

- **The sealant is applied to both sides of the shim (soft metal gasket shim). The liquid gasket is not required for assembling.**
- **Shims are available in thickness of 0.20 mm (0.0079 in.), 0.25 mm (0.0098 in.) and 0.30 mm (0.0118 in.). Combine these shims for adjustments.**
- **Addition or reduction of shim (0.05 mm, 0.0020 in.) delays or advances the injection timing by approx. 0.0087 rad. (0.5 °).**
- **In disassembling and replacing the injection pump, be sure to use the same number of new shims with the same thickness.**
- **Refer to figure below to check the thickness of the shims.**

(Reference)

- The alignment mark (2) of the injection timing (1) is not in alignment with the center of the timing window (8).
- The above mark comes aligned with the center of the clutch housing rib (9).

(1) Timing
(2) Alignment Mark
(3) Control Rack
(4) Shim (Soft Metal Gasket Shim)
(5) Two-holes : 0.20 mm (0.0079 in.)
(6) One-hole : 0.25 mm (0.0098 in.)
(7) Without hole : 0.30 mm (0.0118 in.)
(8) Timing Window
(9) Rib

a : 5 mm (0.2 in.)

W10369450

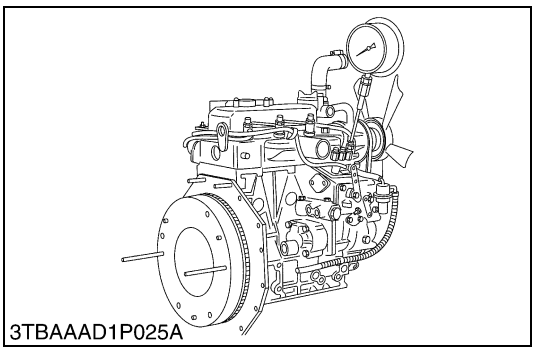

Fuel Tightness of Pump Element

1. Remove the engine stop solenoid.
2. Remove the injection pipes and glow plugs.
3. Install the injection pump pressure tester to the injection pump.
4. Set the speed control lever to the maximum speed position.
5. Turn the flywheel ten times or more to increase the pressure.
6. If the pressure can not reach the allowable limit, replace the pump element or injection pump assembly.

Fuel tightness of pump element	Allowable limit	14.7 MPa 150 kgf/cm^2 2133 psi

■ **NOTE**

- **Apply liquid gasket (Three Bond 1215 or equivalent) to both sides of the solenoid cover gasket.**

W10401760

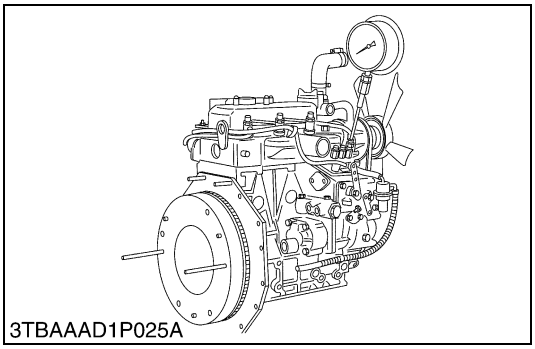

Fuel Tightness of Delivery Valve

1. Remove the engine stop solenoid.
2. Remove the injection pipes and glow plugs.
3. Set a pressure tester to the fuel injection pump.
4. Turn the flywheel and raise the pressure to approx. 14.7 MPa (150 kgf/cm^2, 2130 psi).
5. Now turn the flywheel back about half a turn (to keep the plunger free). Maintain the flywheel at this position and clock the time taken for the pressure to drop from 14.7 to 13.7 MPa (from 150 to 140 kgf/cm^2, from 2130 to 1990 psi).
6. Measure the time needed to decrease the pressure from 14.7 to 13.7 MPa (from 150 to 140 kgf/cm^2, from 2130 to 1990 psi).
7. If the measurement is less than allowable limit, replace the delivery valve.

■ **NOTE**

- **Apply liquid gasket (Three Bond 1215 or equivalent) to both sides of the solenoid cover gasket.**

Fuel tightness of delivery valve	Allowable limit	5 seconds 14.7 → 13.7 MPa 150 → 140 kgf/cm^2 2130 → 1990 psi

W10403300

(B) Injection Nozzle

CAUTION

- **Check the injection pressure and condition after confirming that there is nobody standing in the direction the fume goes.**
  If the fume from the nozzle directly contacts the human body, cells may be destroyed and blood poisoning may be caused.

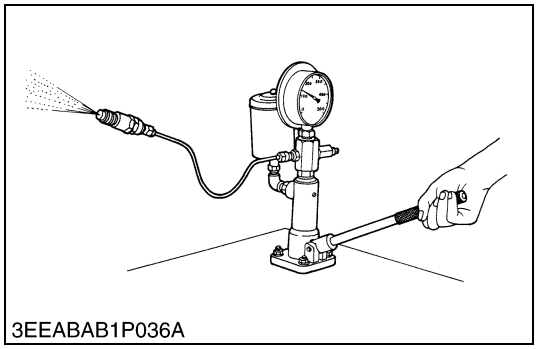

3EEABAB1P036A

Fuel Injection Pressure

1. Set the injection nozzle to a nozzle tester (Code No. 07909-31361).
2. Slowly move the tester handle to measure the pressure at which fuel begins jetting out from the nozzle.
3. If the measurement is not within the factory specifications, replace the adjusting washer (1) in the nozzle holder to adjust it.

Fuel injection pressure	Factory spec.	13.7 to 14.7 MPa 140 to 150 kgf/cm^2 1990 to 2130 psi

(Reference)

- Pressure variation with 0.01 mm (0.0004 in.) difference of adjusting washer thickness.
  Approx. 235 kPa (2.4 kgf/cm^2, 34 psi)

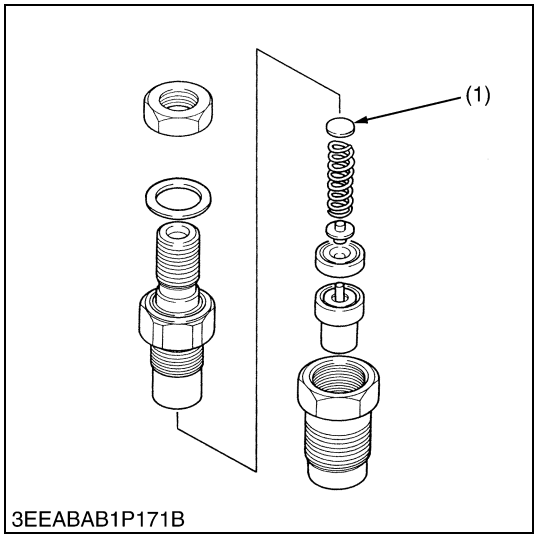

3EEABAB1P171B

(1) Adjusting Washer

W10408820

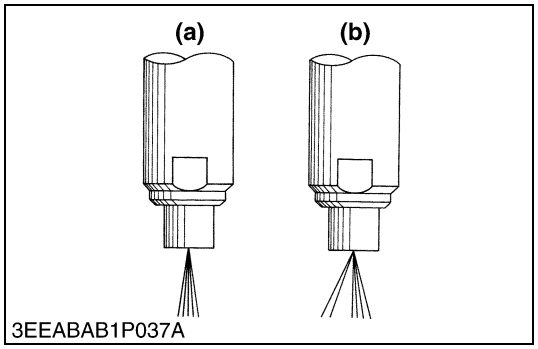

3EEABAB1P037A

Nozzle Spraying Condition

1. Set the injection nozzle to a nozzle tester (Code No. 07909-31361), and check the nozzle spraying condition.
2. If the spraying condition is defective, replace the nozzle piece.

(a) Good **(b) Bad**

W10411400

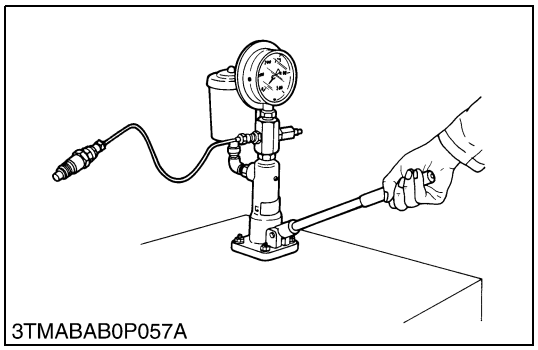

3TMABAB0P057A

Valve Seat Tightness

1. Set the injection nozzle to a nozzle tester (Code No. 07909-31361).
2. Raise the fuel pressure, and keep at 12.7 MPa (130 kgf/cm^2, 1850 psi) for 10 seconds.
3. If any fuel leak is found, replace the nozzle piece.

Valve seat tightness	Factory spec.	No fuel leak at 12.7 MPa 130 kgf/cm^2 1850 psi

W10412730

(2) Disassembling and Assembling

(A) Injection Nozzle

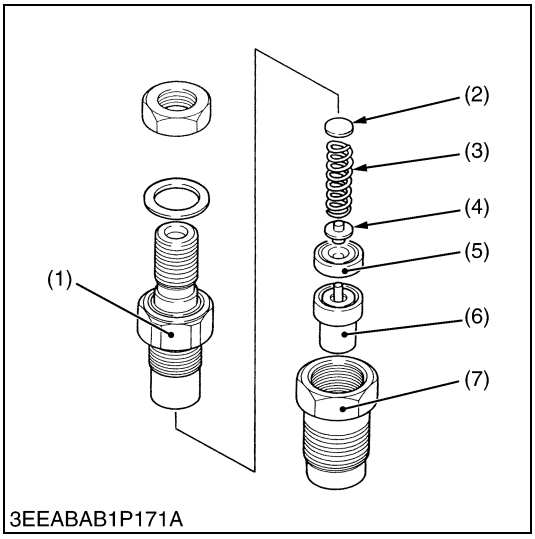

Nozzle Holder

1. Secure the nozzle retaining nut (7) with a vise.
2. Remove the nozzle holder (1), and take out parts inside.

(When reassembling)

- Assemble the nozzle in clean fuel oil.
- Install the push rod (4), noting its direction.
- After assembling the nozzle, be sure to adjust the fuel injection pressure.

Tightening torque	Nozzle holder	34.3 to 39.2 N·m 3.5 to 4.0 kgf·m 25.3 to 28.9 ft-lbs
	Overflow pipe nut	19.6 to 24.5 N·m 2.0 to 2.5 kgf·m 14.5 to 18.1 ft-lbs
	Nozzle holder assembly	49.0 to 68.6 N·m 5.0 to 7.0 kgf·m 36.2 to 50.6 ft-lbs

(1) Nozzle Holder
(2) Adjusting Washer
(3) Nozzle Spring
(4) Push Rod
(5) Distance Piece
(6) Nozzle Piece
(7) Nozzle Retaining Nut

W10415210

2 CLUTCH

MECHANISM

CONTENTS

1. FEATURES 2-M1
2. LINKAGE MECHANISM 2-M2
3. OPERATION 2-M3

1. FEATURES

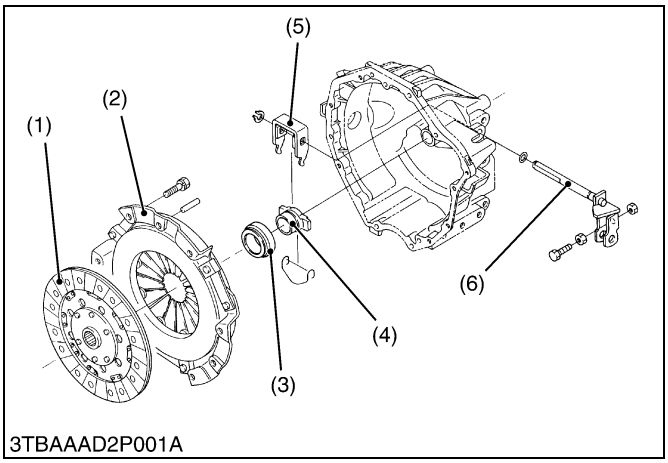

This tractor is used dry single plate type clutch.

The clutch is located between the engine and transmission and is operated by stepping on the clutch pedal.

When the clutch pedal is depressed, the clutch is disengaged and when it is released, the clutch is engaged and power from the engine is transmitted to the transmission.

(1) Clutch Disc
(2) Pressure Plate Assembly
(3) Release Bearing
(4) Release Hub
(5) Release Fork
(6) Clutch Rod

W10126520

2. LINKAGE MECHANISM

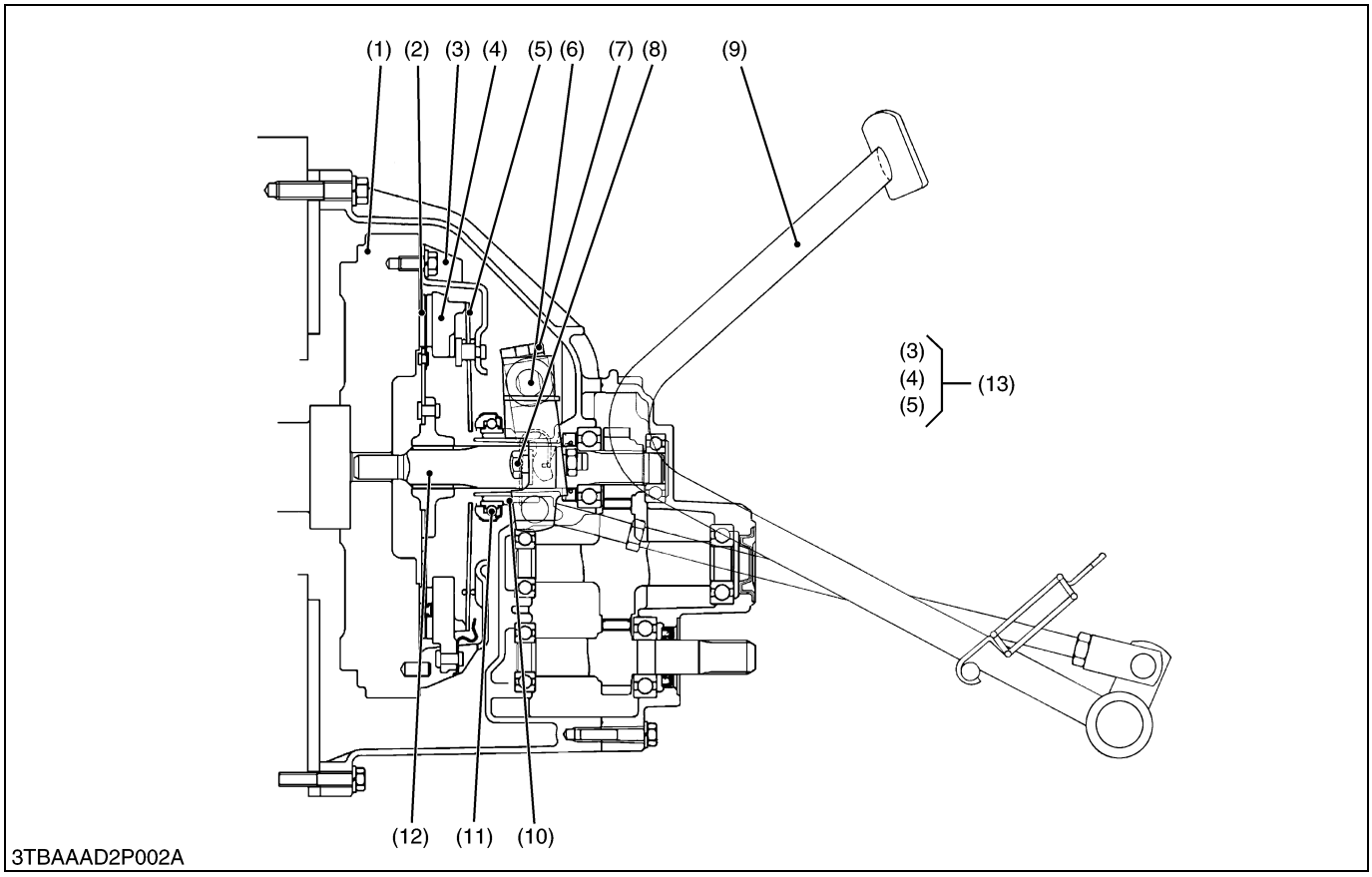

(1) Engine Flywheel
(2) Clutch Disc
(3) Clutch Cover
(4) Pressure Plate
(5) Diaphragm Spring
(6) Clutch Rod
(7) Clutch Release Fork
(8) Clutch Adjusting Bolt
(9) Clutch Pedal
(10) Clutch Release Hub
(11) Clutch Release Bearing
(12) Clutch Shaft
(13) Pressure Plate Assembly

Engine torque is transmitted to the pressure plate assembly (13) via the flywheel (1) which is connected to the engine crankshaft. Therefore, the clutch cover constantly runs with engine. The clutch disc (2) is located between the flywheel (1) and the pressure plate (4) of pressure plate assembly. Torque is transmitted to the clutch disc (2) by the pressure created by diaphragm spring (5) installed in pressure plate assembly. Then, the torque is transmitted to the transmission via the clutch shaft (12).

When the pedal (9) is depressed, the clutch release hub (10) and the clutch release bearing (11) move towards the flywheel and push the fingers of the diaphragm spring (5). In order words, this movement pulls the pressure plate (4) up an disengages the clutch.

3. OPERATION

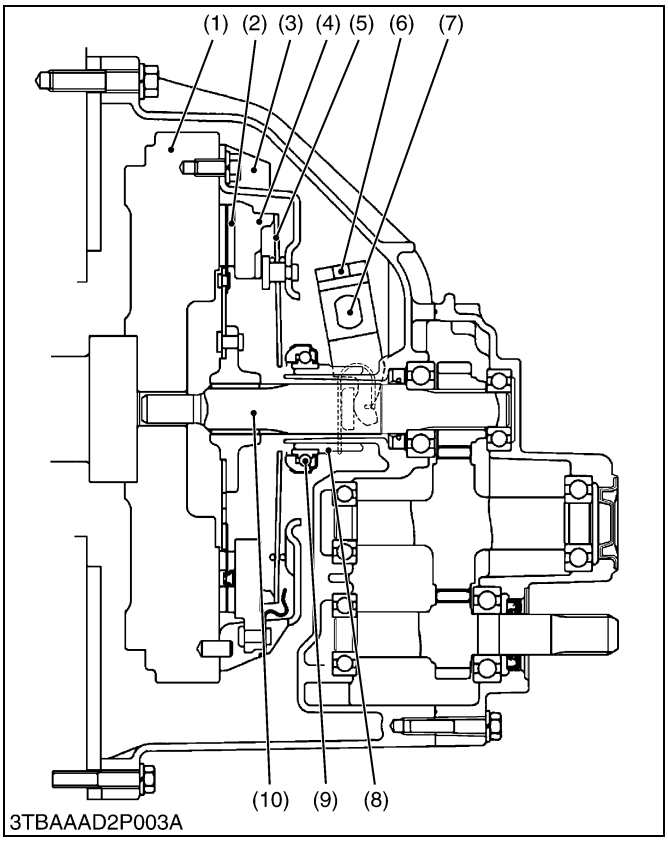

■ Clutch "Engaged"

When the clutch pedal is not depressed, the clutch release bearing (9) and the fingers of diaphragm spring (5) are not connected to each other.

Accordingly, the pressure plate (4) is tightly pressed against the flywheel (1) by the diaphragm spring (5). As a result, rotation of the flywheel (1) is transmitted to the transmission through the clutch shaft (10) due to the frictional force among the flywheel (1), clutch disc (2) and pressure plate (4).

(1) Flywheel
(2) Clutch Disc
(3) Clutch Cover
(4) Pressure Plate
(5) Diaphragm Spring
(6) Release Fork
(7) Clutch Rod
(8) Release Hub
(9) Release Bearing
(10) Clutch Shaft

W10129200

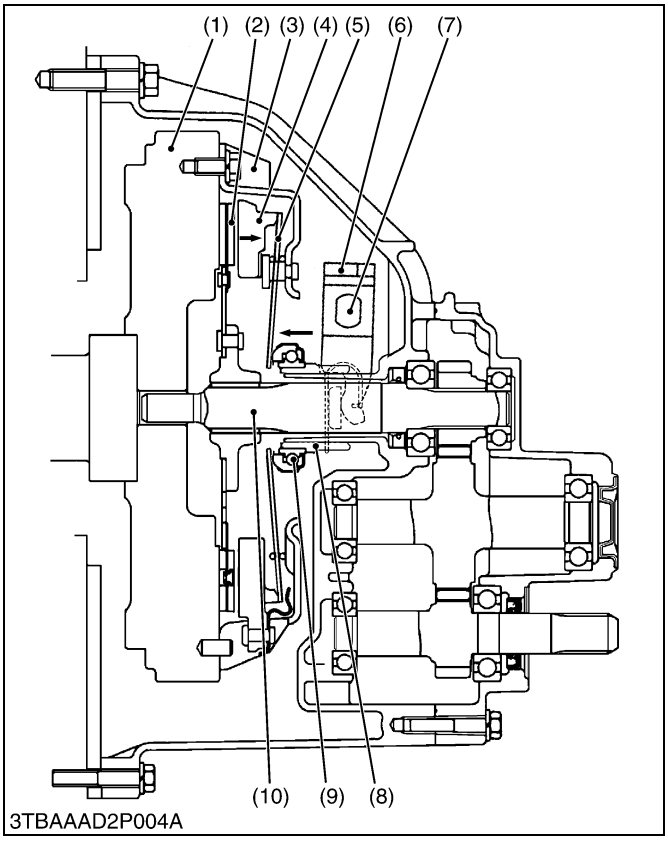

■ Clutch "Disengaged"

When the clutch pedal is depressed, the clutch pedal rod is pulled to move the clutch rod (7). Then, the release fork (6) pushes the release hub (8) and release bearing (9) toward the flywheel. Simultaneously, the release bearing (9) pushes the diaphragm spring (5).

As the pressure plate (4) is pulled by the diaphragm spring (5), the frictional force among the flywheel (1), clutch disc (2) and pressure plate (4) disappears.

Therefore, rotation of the flywheel (1) is not transmitted to the clutch disc (2), and then the rotation of the clutch shaft (10) stops.

(1) Flywheel
(2) Clutch Disc
(3) Clutch Cover
(4) Pressure Plate
(5) Diaphragm Spring
(6) Release Fork
(7) Clutch Rod
(8) Release Hub
(9) Release Bearing
(10) Clutch Shaft

W10130550

SERVICING

CONTENTS

1. TROUBLESHOOTING 2-S1
2. SERVICING SPECIFICATIONS 2-S2
3. TIGHTENING TORQUES 2-S3
4. CHECKING, DISASSEMBLING AND SERVICING 2-S4
   [1] CHECKING AND ADJUSTING 2-S4
   [2] DISASSEMBLING AND ASSEMBLING 2-S5
      (1) Separating Engine from Clutch Housing 2-S5
      (2) Separating Clutch Assembly 2-S9
   [3] SERVICING 2-S10

1. TROUBLESHOOTING

Symptom	Probable Cause	Solution	Reference Page
Clutch Drags	• Clutch pedal free travel excessive • Dust on clutch disc generated from clutch facing • Release fork broken • Clutch disc or pressure plate warped • Wire ring of the pressure plate worn or broken	Adjust Remove rust Replace Replace Replace (Pressure plate assembly)	2-S4 2-S9 2-S10 2-S9 2-S9
Clutch Slips	• Clutch pedal free travel too small • Clutch disc excessively worn • Grease or oil on clutch disc facing • Clutch disc or pressure plate warped • Diaphragm spring weaken or broken • Wire ring of the pressure plate worn or broken	Adjust Replace Replace Replace Replace Replace (Pressure plate assembly)	2-S4 2-S9 2-S9 2-S9 2-S9 2-S9
Chattering	• Grease or oil on clutch disc facing • Clutch disc or pressure plate warped • Clutch disc boss spline worn or rusted • Clutch shaft bent • Pressure plate or flywheel face cracked or scored • Clutch disc boss spline and clutch shaft spline worn • Diaphragm spring strength uneven or diaphragm spring broken	Replace Replace Replace or remove rust Replace Replace Replace Replace	2-S9 2-S9 2-S9 3-S16 1-S30, 2-S9 2-S9, 3-S16 2-S9
Rattle During Running	• Clutch disc boss spline worn • Release bearing worn or sticking	Replace Replace	2-S9 2-S10
Clutch Squeaks	• Release bearing sticking or dry • Clutch disc excessively worn	Replace Replace	2-S10 2-S9
Vibration	• Clutch shaft bent • Clutch disc rivet worn or broken • Clutch parts broken	Replace Replace Replace	3-S16 2-S9 2-S9, S10

W10143220

2. SERVICING SPECIFICATIONS

Item		Factory Specification	Allowable Limit
Clutch Pedal	Free Travel on Stopper Bolt (Reference) on Clutch Pedal	1.0 to 1.5 mm 0.039 to 0.059 in. 20 to 30 mm 0.78 to 1.18 in.	– –
Clutch Pedal Stopper Bolt	Clearance **"B"** between Stopper Bolt and Clutch Housing	8.0 to 9.0 mm 0.31 to 0.35 in.	–
Safety Switch Setting Position	Clearance **"C"** of Safety Switch when Clutch Pedal Released	1.5 to 2.5 mm 0.059 to 0.098 in.	–
Clutch Disc	Disc Surface to Rivet Top (Depth)	–	0.3 mm 0.012 in.
Clutch Disc Boss to Gear Shaft	Backlash (Displacement Around Disc Edge)	–	2.0 mm 0.079 in.
Pressure Plate	Flatness	–	0.2 mm 0.008 in.
Diaphragm Spring	Mutual Difference	–	0.5 mm 0.020 in.
Bi-speed Turn Cable Outer (Clutch Housing Side)	Distance **A** [B2110, B2410] [B2710]	18 mm 0.71 in. 16 mm 0.63 in.	– –
Bi-speed Turn Cable Inner (Front Axle Case Side)	Distance **B** [B2110, B2410] [B2710]	10 mm 0.39 in. 8 mm 0.31 in.	– –

W10138740

3. TIGHTENING TORQUES

Tightening torques of screws, bolts and nuts on the table below are especially specified.
(For general use screws, bolts and nuts : See page G-9.)

Item	N·m	kgf·m	ft-lbs
Steering wheel mounting nut	29.4 to 49.0	3.0 to 5.0	21.7 to 36.2
Delivery pipe nut for HST	34 to 39	3.5 to 4.0	25.3 to 28.9
Oil cooler pipe nut	50 to 58	5.1 to 5.9	36.9 to 42.8
Delivery pipe nut for power steering	65 to 75	6.6 to 7.7	47.9 to 55.3
Drag link slotted nut	17.7 to 34.5	1.8 to 3.5	13.0 to 25.3
Clutch housing and engine mounting screw	17.7 to 20.6	1.8 to 2.1	13.0 to 15.2
Clutch housing and engine mounting nut	48.1 to 55.8	4.9 to 5.7	35.5 to 41.2
Clutch cover mounting screw	23.5 to 27.5	2.4 to 2.8	17.4 to 20.2

W10127360

4. CHECKING, DISASSEMBLING AND SERVICING

[1] CHECKING AND ADJUSTING

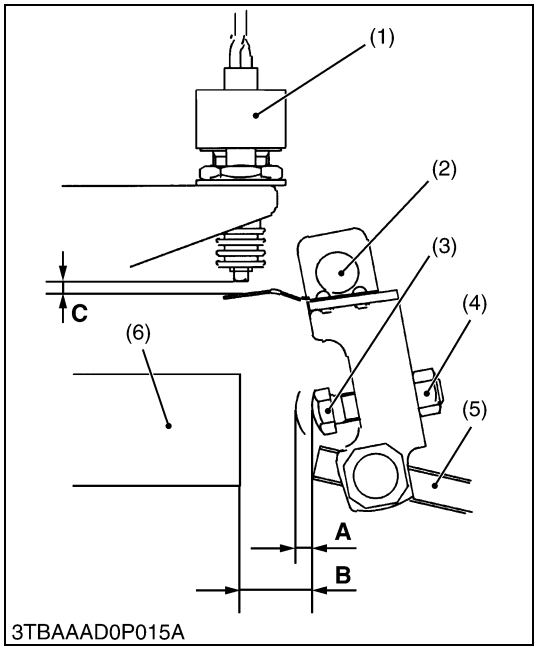

3TBAAAD0P015A

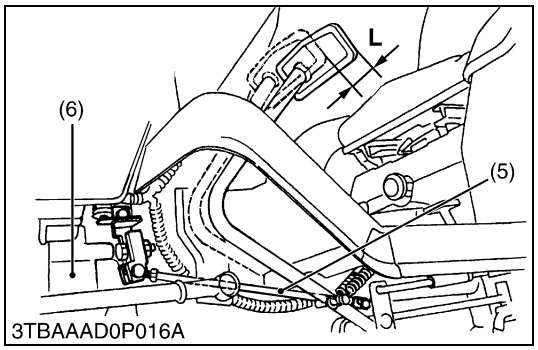

3TBAAAD0P016A

Checking Clutch Pedal Free Travel

CAUTION

- **When checking, park the tractor on flat ground, apply the parking brake, stop the engine and remove the key.**

1. Slightly depress the clutch pedal and measure stroke **"A"** at top of stopper bolt (3).
2. If the measurement is not within the factory specifications, loosen the lock nut and adjust the clutch pedal rod (5) length.
3. After adjusting it, measure total stroke **"B"** between stopper bolt (3) and clutch housing (6).
4. If the measurement is not within the factory specifications, adjust it with the clutch pedal stopper bolt (3).
5. And at the same time, adjust the clearance **"C"** between safety switch (1) and clutch pedal rod (5).

NOTE

- **After adjustment, sure the stopper bolt with the lock nut (4).**

Clutch pedal free travel on stopper bolt stroke **"A"**	Factory spec.	1.0 to 1.5 mm 0.039 to 0.059 in.
Reference : Clutch pedal free travel **"L"** on top of clutch pedal		20 to 30 mm 0.78 to 1.18 in.
Clutch pedal total stroke **"B"**	Factory spec.	8.0 to 9.0 mm 0.31 to 0.35 in.
Clearance **"C"**	Factory spec.	1.5 to 2.5 mm 0.059 to 0.098 in.

(1) Safety Switch
(2) Clutch Rod
(3) Stopper Bolt
(4) Lock Nut for Stopper Bolt
(5) Clutch Pedal Rod
(6) Clutch Housing

W10115880

[2] DISASSEMBLING AND ASSEMBLING

(1) Separating Engine from Clutch Housing

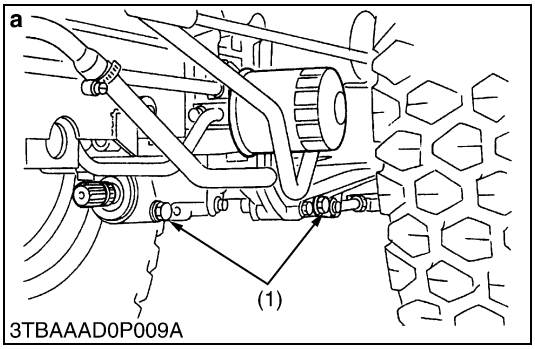

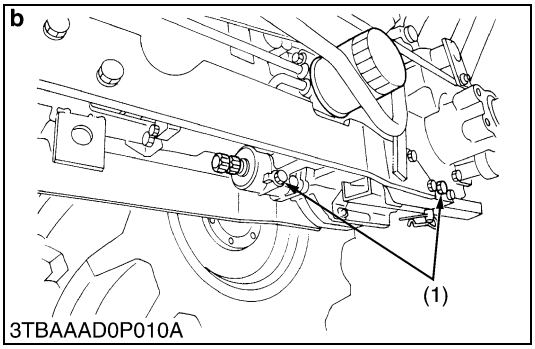

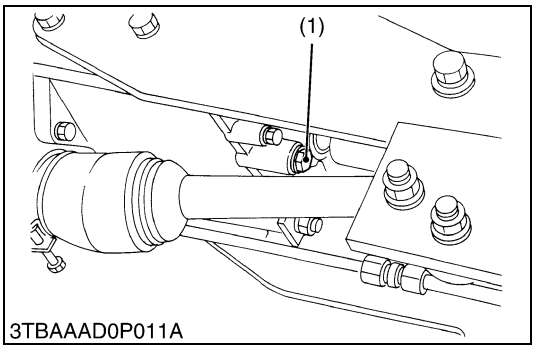

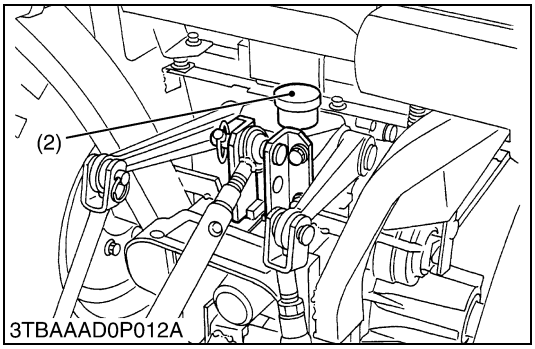

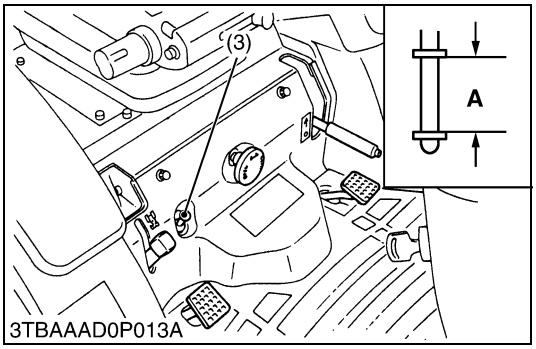

Draining Transmission Fluid

1. Place oil pan underneath the transmission case, and remove the drain plugs (1).
2. Drain the transmission fluid.
3. Reinstall the drain plug (1).

(When refilling)

- Fill new oil from filling port after removing the filling plug (2) up to the upper notch on the dipstick (3).
- After running the engine for few minutes, stop it and check the oil level again, if low, add oil prescribed level.

■ **IMPORTANT**

- **Use only KUBOTA UDT fluid-Use of other oils may damage the transmission or hydraulic system.**
  Refer to "LUBRICANTS, FUEL AND COOLANT". (See page G-8.)
- **Never work the tractor immediately after changing the transmission oil. Keeping the engine at medium speed for a few minutes to prevents damage to the transmission.**
- **Do not mix different blands oil together.**

Transmission fluid capacity	B1710D B2110D B2110DB B2410D B2410DB	11.5 L 3.04 U.S.gals. 2.53 Imp.gals.
	B2110HDB B2410HDB	12.5 L 3.30 U.S.gals. 2.75 Imp.gals.
	B2710HDB	15.5 L 4.10 U.S.gals. 3.41 Imp.gals.

(1) Drain Plug
(2) Filling Port
(3) Dipstick

A : Oil level is acceptable within this range.
a : B1710, B2110, B2410
b : B2710

W10152230

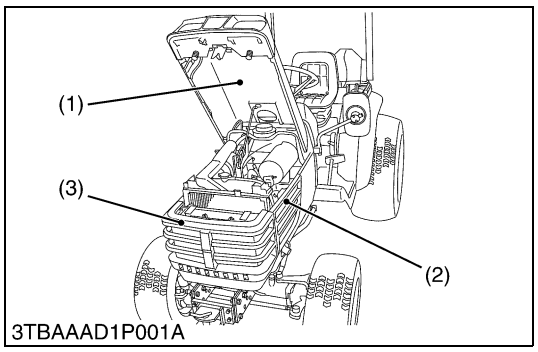

Hood, Side Cover and Front Grille

1. Open the hood (1) and remove the front grille (3).
2. Disconnect the head light connectors and remove the hood and side covers (2).

(1) Hood
(2) Side Cover
(3) Front Grille

W10156940

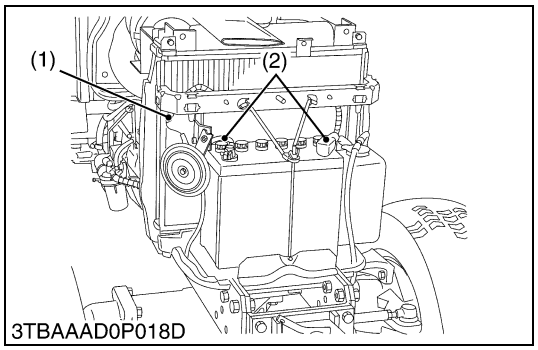

Battery and Horn

1. Disconnect the battery cords (2) and horn connector (1).

■ **NOTE**

- **When disconnecting the battery cords, disconnect the grounding cord first. When connecting, positive cord first.**

(1) Horn Connector
(2) Battery Cord

W10424310

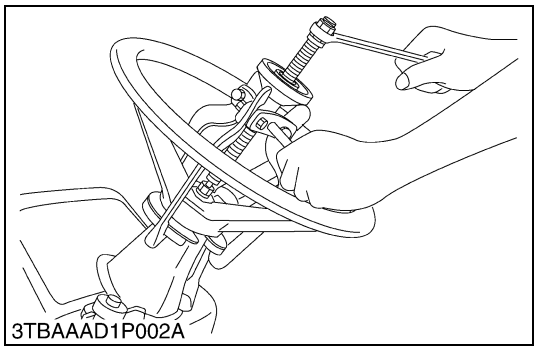

Steering Wheel

1. Remove the steering wheel cap.
2. Remove the steering wheel mounting nut and remove the steering wheel with a steering wheel puller (Code No. 07916-51090).

(When reassembling)

Tightening torque	Steering wheel mounting nut	29.4 to 49.0 N·m 3.0 to 5.0 kgf·m 21.7 to 36.2 ft-lbs

W10158450

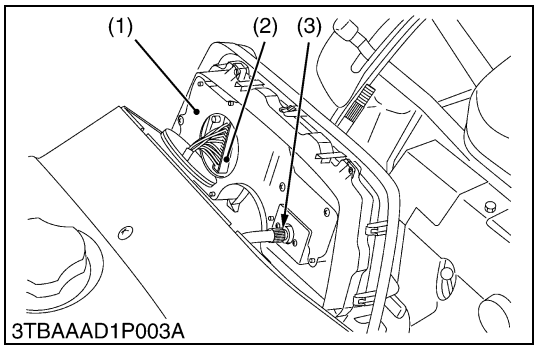

Meter Panel and Panel Under Cover

1. Open the meter panel (1) and disconnect the meter panel connector (2) and hour-meter cable (3). Then remove the meter panel.
2. Disconnect the combination switch connector (8), main switch connector (4), hazard switch connector (6) and position light switch connector (7).
3. Tap out the spring pin and remove the hand accelerator lever (5).
4. Remove the panel under cover (9).

(1) Meter Panel
(2) Meter Panel Connector
(3) Hour-meter Cable
(4) Main Switch Connector
(5) Hand Accelerator Lever
(6) Hazard Switch Connector
(7) Position Light Switch Connector
(8) Combination Switch Connector
(9) Panel Under Cover

W10132980

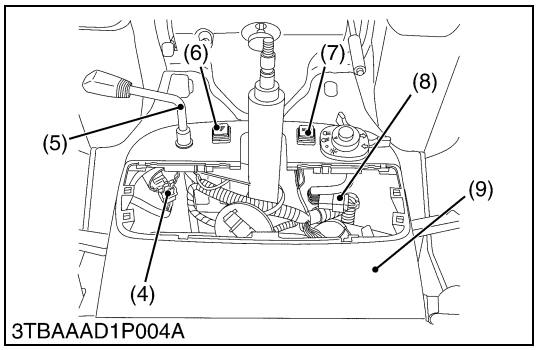

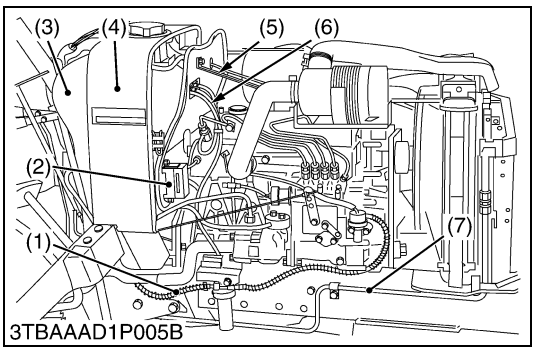

Fuel Tank

1. Disconnect the fuel hose (1) at the fuel filter side, then drain fuel completely.
2. Remove the fuel tank frame stay (5).
3. Disconnect the flasher unit and starter relay connectors and remove the lead wire for fuel gauge.
4. Remove the fuse box (2).
5. Disconnect the overflow hoses (6) of fuel line.
6. Remove the tank frame (4) with fuel tank (3).
7. Disconnect the hydraulic pipes (7).

(When reassembling)

■ **NOTE**

- **For fastening hydraulic pipe nut, use two wrenches. Hold the fitting with a wrench, turn the pipe nut with another wrench to avoid damage at fitting installed part.**

Tightening torque	Delivery pipe nut for HST	34 to 39 N·m 3.5 to 4.0 kgf·m 25.3 to 28.9 ft-lbs
	Oil cooler pipe nut	50 to 58 N·m 5.1 to 5.9 kgf·m 36.9 to 42.8 ft-lbs

(1) Fuel Hose
(2) Fuse Box
(3) Fuel Tank
(4) Fuel Tank Frame
(5) Fuel Tank Frame Stay
(6) Overflow Hose
(7) Oil Cooler Pipe IN (HST Model)

W10162030

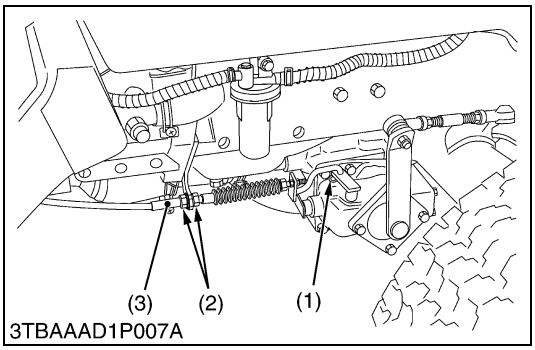

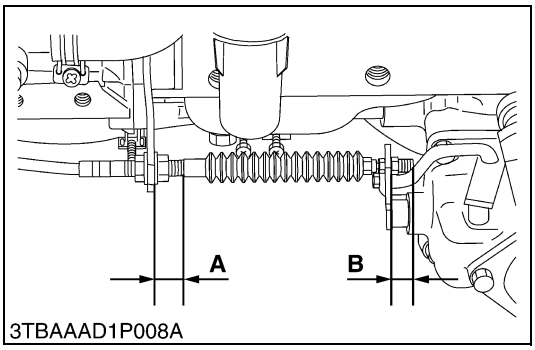

Bi-speed Turn Cable (Bi-speed Model)

1. Remove the spring lock pin (1) and loosen the lock nuts (2) and then remove the bi-speed turn cable (3).

(When reassembling)

- When reassembling the bi-speed turn cable (3), make sure the distance **A**.

Distance **A**	Factory spec.	B2110 B2410	18 mm 0.71 in.
		B2710	16 mm 0.63 in.

(Reference)

Distance **B**	Factory spec.	B2110 B2410	10 mm 0.39 in.
		B2710	8 mm 0.31 in.

(1) Spring Lock Pin
(2) Lock Nut
(3) Bi-speed Turn Cable

W10151930

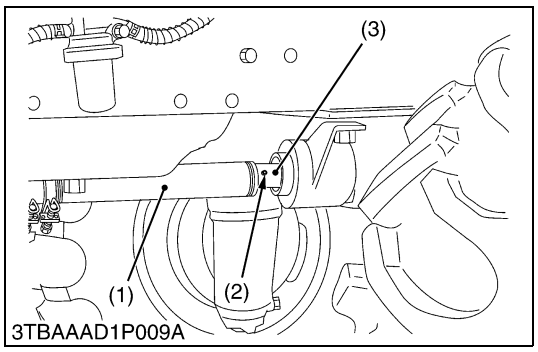

Propeller Shaft Cover and Coupling

1. Loosen the clamp and slide the propeller shaft cover (1) to the rear.
2. Tap out the spring pin (2) and then slide the coupling (3) to the rear.

(When reassembling)

- Apply grease to the splines of the propeller shaft and coupling.

(1) Propeller Shaft Cover
(2) Spring Pin
(3) Coupling

W10167000

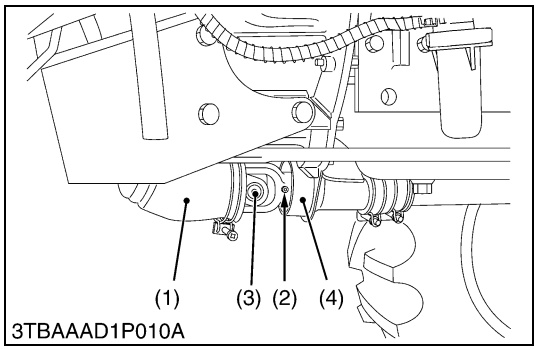

Universal Joint and Bearing Holder

1. Loosen the clamp and slide the universal joint cover (1) to the rear.
2. Tap out the spring pins (2) and then slide the universal joint (3) to the rear.
3. Remove the bearing holder (4) with propeller shaft and universal joint.

(When reassembling)

- Apply grease to the splines of the propeller shaft and universal joint.
- When inserting the spring pins (2), face their splits in the direction parallel to the universal joint as shown in the figure.

(1) Universal Joint Cover
(2) Spring Pin
(3) Universal Joint
(4) Bearing Holder

W10169120

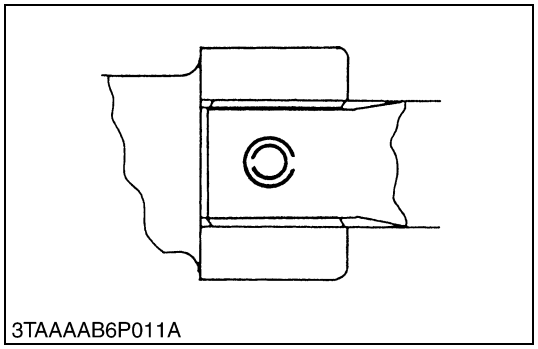

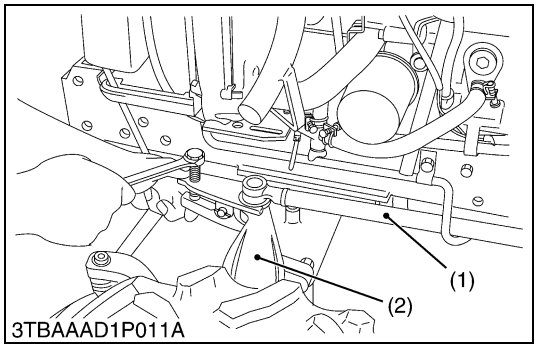

Drag Link

1. Remove the cotter pin and loosen the slotted nut.
2. Disconnect the drag link (1) with a tie-rod end lifter from the knuckle arm (2).

(When reassembling)

■ **IMPORTANT**

- **Do not loosen the slotted nut to align the hole.**
- **Install the cotter pin as shown in the figure.**

(Reference)

Tightening torque	Slotted nut	17.7 to 34.5 N·m 1.8 to 3.5 kgf·m 13.0 to 25.3 ft-lbs

(1) Drag Link
(2) Knuckle Arm

W10170780

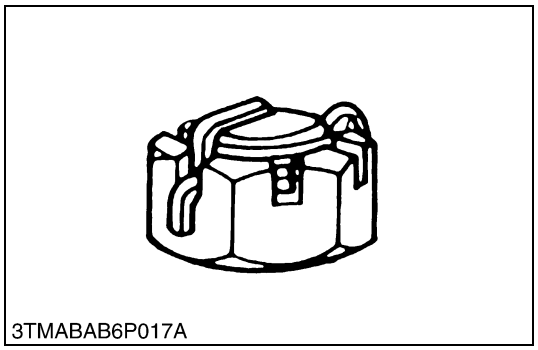

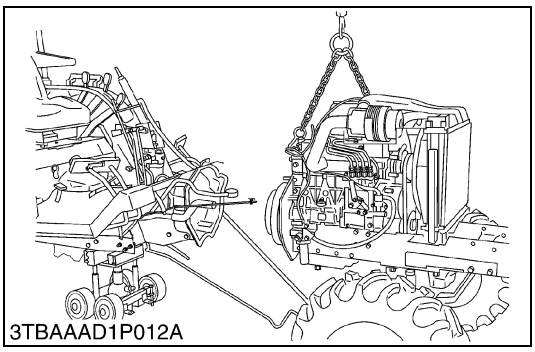

Separating the Engine from Clutch Housing

1. Remove the power steering delivery pipe.
2. Disconnect the accelerator rod.
3. Disconnect the three point hitch delivery pipe and suction hose at the hydraulic pump.
4. Disconnect the glow plug lead wire and thermo sensor lead wire. And then disconnect the connector for alternator and starter motor lead wire.
5. Place the jack under the center frame.
6. Hoist the engine by the chain at the engine hook.
7. Remove the engine mounting screws and separate the engine from the clutch housing.

(When reassembling)

- Apply liquid gasket (Three Bond 1208D or equivalent) to joint face of the engine and clutch housing.

Tightening torque	Engine mounting screw	17.7 to 20.6 N·m 1.8 to 2.1 kgf·m 13.0 to 15.2 ft-lbs
	Engine mounting nut	48.1 to 55.8 N·m 4.9 to 5.7 kgf·m 35.5 to 41.2 ft-lbs
	Delivety pipe nut for power steering	65 to 75 N·m 6.6 to 7.7 kgf·m 47.9 to 55.3 ft-lbs

W10142130

(2) Separating Clutch Assembly

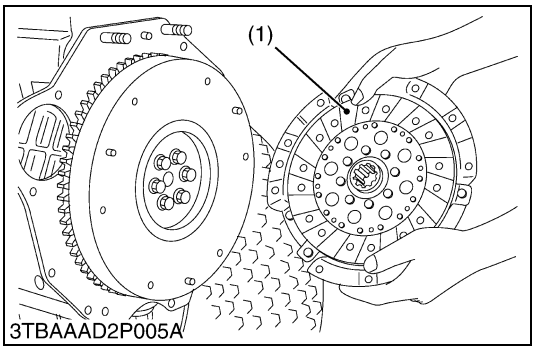

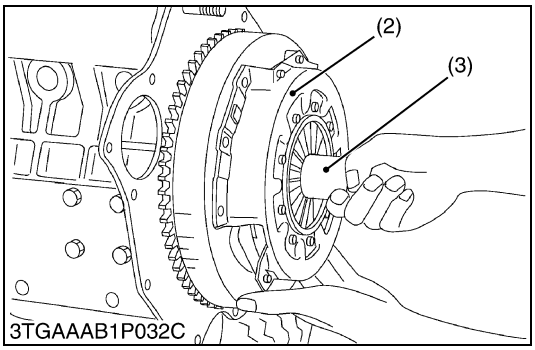

Separating the Clutch Assembly

1. Remove the clutch assembly (2) from the flywheel.

(When reassembling)

- Direct the shorter end of the clutch disc boss toward the flywheel.
- Apply molybdenum disulphide (Three Bond 1901 or equivalent) to the splines of clutch disc boss.
- Install the pressure plate, noting the position of straight pins.

■ **IMPORTANT**

- **align the center of clutch disc and flywheel by inserting the clutch center tool (3).**

■ **NOTE**

- **Do not allow grease and oil on the clutch disc facing.**

Tightening torque	Clutch mounting screw	23.5 to 27.5 N·m 2.4 to 2.8 kgf·m 17.4 to 20.2 ft-lbs

(1) Clutch Disc
(2) Clutch Assembly
(3) Clutch Center Tool

W10119250

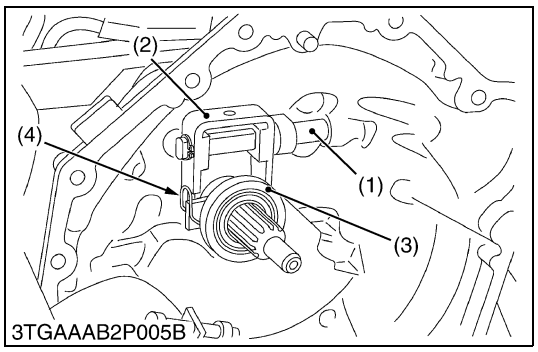

Clutch Rod and Clutch Release Fork

1. Remove the clutch pedal rod.
2. Remove the external snap ring at the end of clutch rod (1) and remove the clutch release fork (2) and release bearing (3) with release hub.

(When reassembling)

- Set the clutch release fork and release hub with set spring (4) in the correct direction.

(1) Clutch Rod
(2) Clutch Release Fork
(3) Release Bearing
(4) Set Spring

W10122340

[3] SERVICING

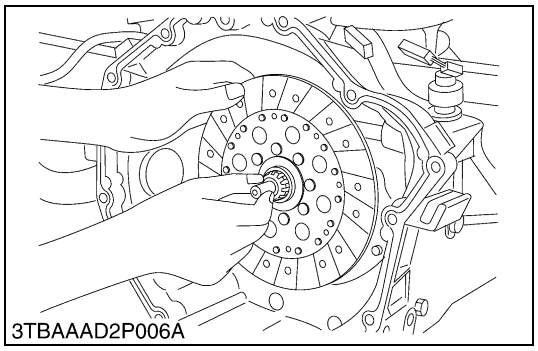

Backlash between Clutch Disc and Clutch Shaft

1. Mount the clutch disc onto the propeller shaft.
2. Hold the propeller shaft so that it does not rotate.
3. Slightly move the disc and measure the displacement around disc edge.
4. If the measurement exceeds the allowable limit, replace clutch disc.

Displacement around disc edge	Allowable limit	2.0 mm 0.079 in.

W10123650

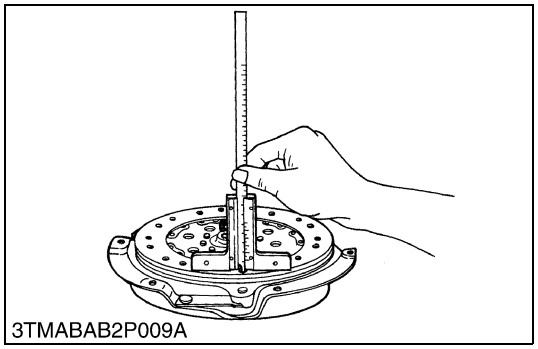

Clutch Disc Wear

1. Measure the depth from clutch disc surface to the top of rivet at least 10 points with a depth gauge.
2. If the depth is less than the allowable limit, replace the disc.
3. If oil is sticking to clutch disc, or disc surface is carbonized, replace the clutch disc.

Disc surface to rivet top (Depth)	Allowable limit	0.3 mm 0.012 in.

W10163860

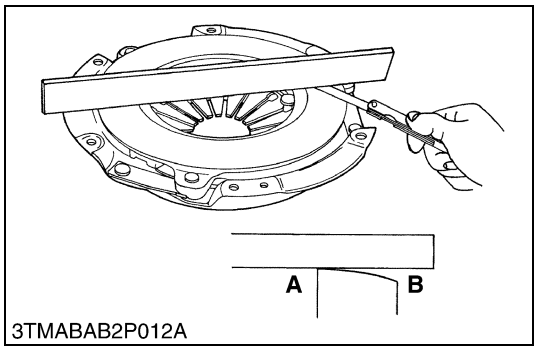

Pressure Plate Flatness

1. Place a straightedge on the pressure plate and measure clearance with a feeler gauge at several points.
2. If the clearance exceeds the allowable limit, replace it.
3. When the pressure plate is worn around its outside and its inside surface only is in contact with the straightedge, replace even if the clearance is within the allowable limit.

Clearance between pressure plate and straightedge	Allowable limit	0.2 mm 0.008 in.

A : Inside **B : Outside**

W10164820

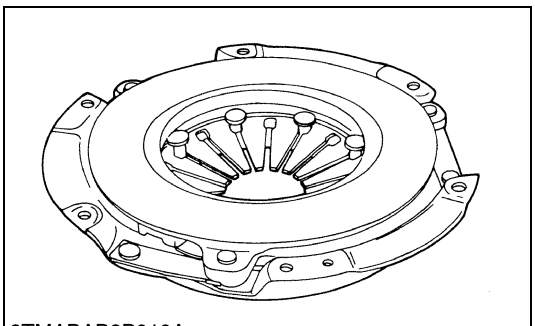

3TMABAB2P010A

Checking Pressure Plate and Diaphragm

1. Check the pressure plate and if scratched on its surface, correct with sandpaper or replace it.
2. Check the diaphragm for crack and scratches. If defects are found, replace it.

W10166140

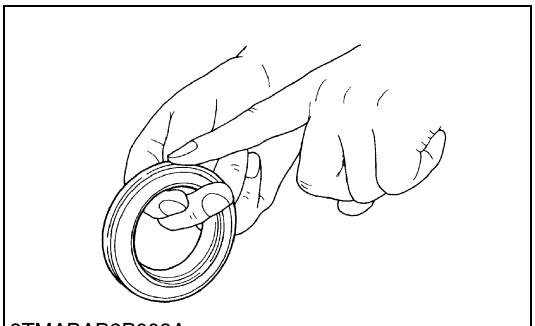

3TMABAB2P008A

Checking Clutch Release Bearing

1. Check the clutch release bearing. If surface is worn excessively, or abnormal sounds occur, replace it.

W10166850

3 TRANSMISSION

MECHANISM

CONTENTS

1. STRUCTURE 3-M1
   [1] B1710D, B2110D, B2110DB, B2410D, B2410DB 3-M1
   [2] B2110HDB, B2410HDB 3-M2
   [3] B2710HDB 3-M3
2. TRAVELLING SYSTEM 3-M4
   [1] MAIN GEAR SHIFT SYSTEM(B1710D, B2110D, B2110DB, B2410D, B2410DB) 3-M4
   [2] HYDROSTATIC TRANSMISSION SYSTEM 3-M5
      (1) Structure 3-M5
      (2) Pump and Motor 3-M7
      (3) Oil Flow and Valves 3-M8
      (4) Operation 3-M11
      (5) Control Linkage 3-M14
   [3] RANGE GEAR SHIFT SYSTEM 3-M15
      (1) B1710, B2110, B2410 (Two Speeds) 3-M15
      (2) B2710 (Three Speeds) 3-M15
   [4] FRONT WHEEL DRIVE SYSTEM 3-M16
3. PTO SYSTEM 3-M17
   [1] REAR PTO SYSTEM 3-M17
      (1) Manual Transmission Type 3-M17
      (2) Hydrostatic Transmission Type 3-M17
   [2] MID-PTO SYSTEM 3-M18
      (1) Manual Transmission Type 3-M18
      (2) Hydrostatic Transmission Type 3-M18
   [3] ONE-WAY CLUTCH SYSTEM (MANUAL TRANSMISSION MODEL) 3-M19
4. DIFFERENTIAL GEAR SYSTEM 3-M21
   [1] STRUCTURE 3-M21
   [2] OPERATION 3-M21
   [3] DIFFERENTIAL LOCK 3-M22

1. STRUCTURE

[1] B1710D, B2110D, B2110DB, B2410D, B2410DB

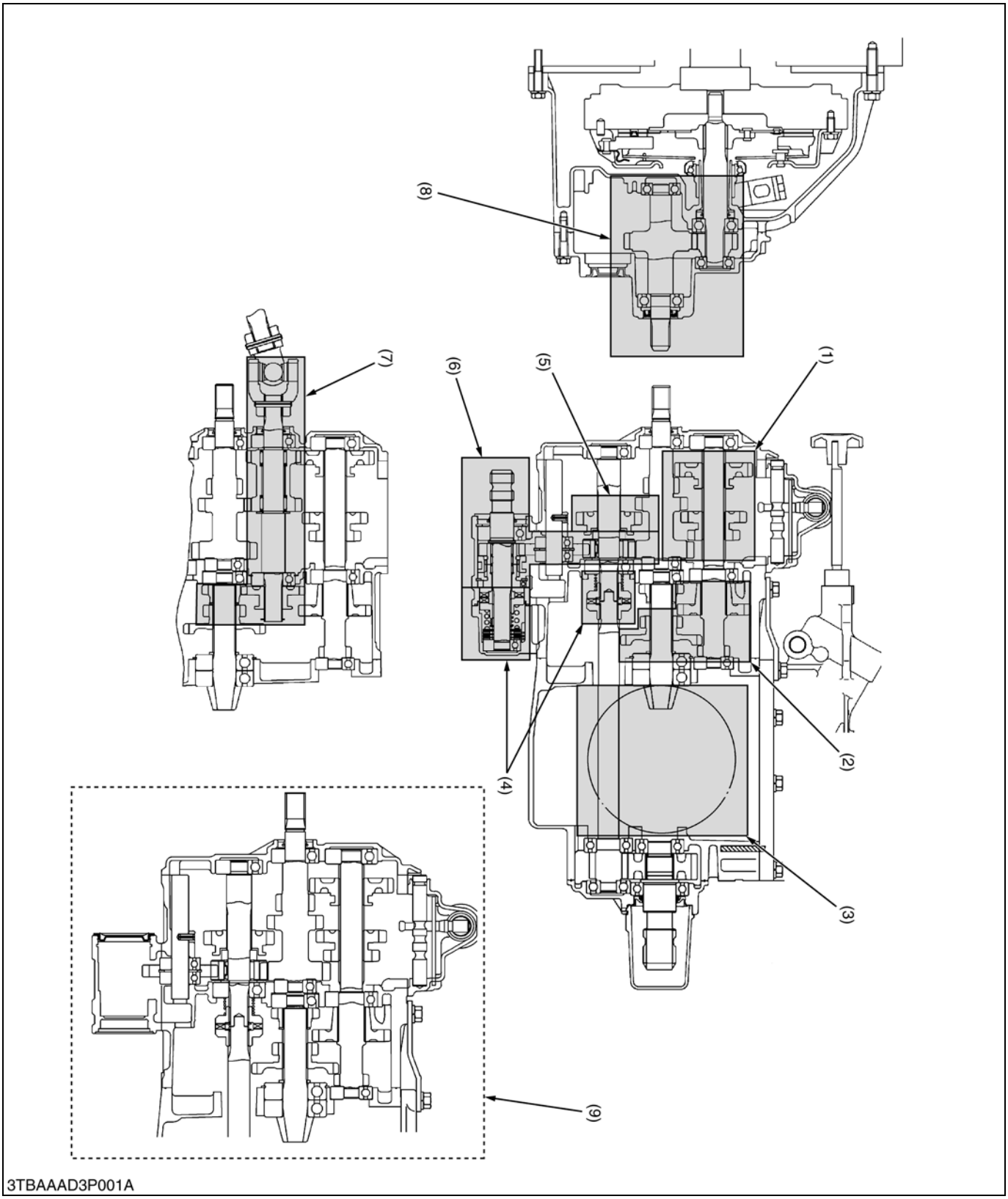

(1) Main Gear Shift Section
(2) Range Gear Shift Section
(3) Differential Gear Section
(4) One-way Clutch Section (Mid and Rear PTO)
(5) Rear PTO Shift Section
(6) Mid-PTO Shift Section
(7) Front Wheel Drive Section
(8) Clutch Housing Section
(9) Transmission Case for B2110DB, B2410DB (without Mid-PTO)

[2] B2110HDB, B2410HDB

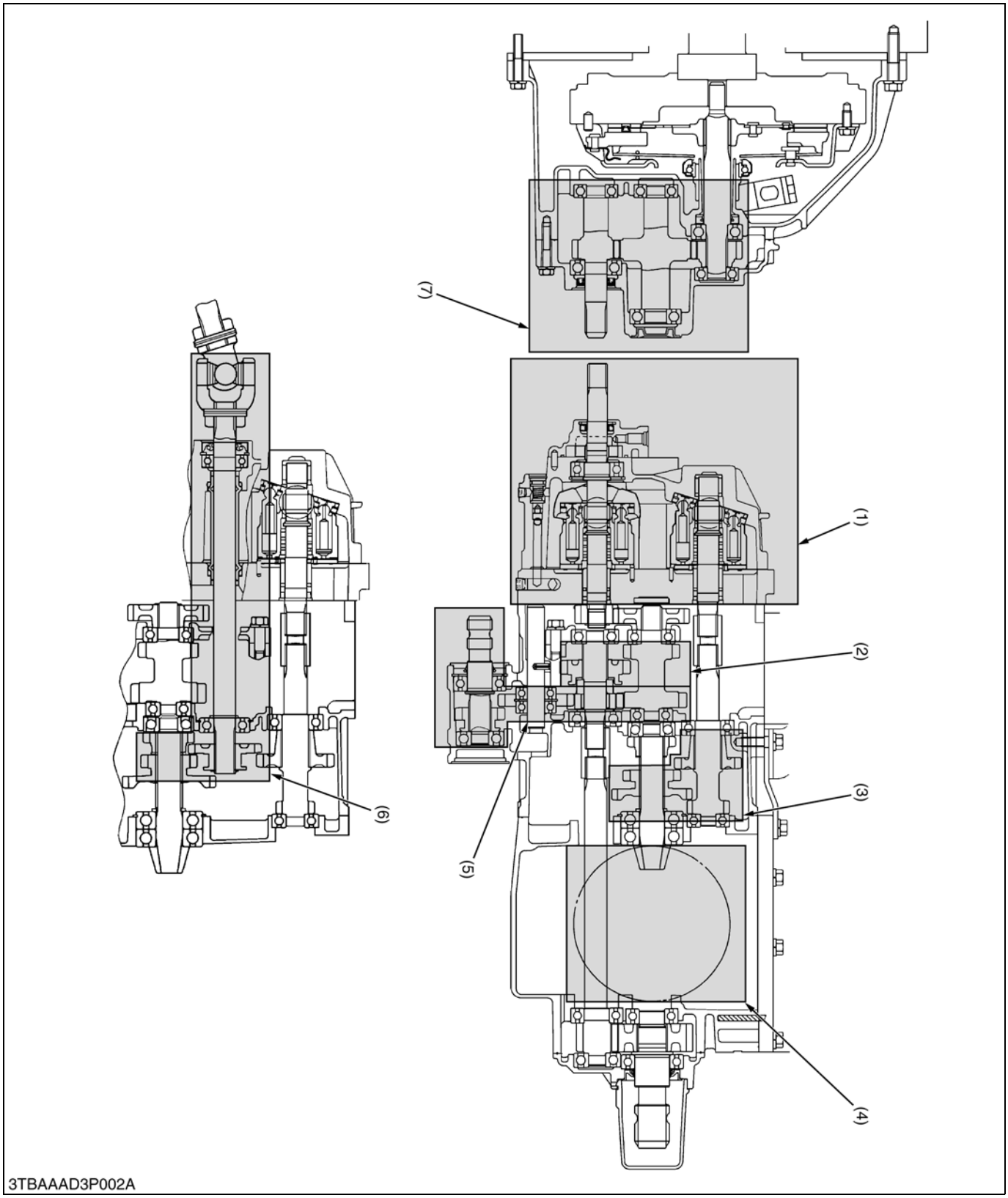

(1) Hydrostatic Transmission Section
(2) Rear PTO Shift Section
(3) Range Gear Shift Section
(4) Differential Gear Section
(5) Mid-PTO Shift Section
(6) Front Wheel Drive Section
(7) Clutch Housing Section

[3] B2710HDB

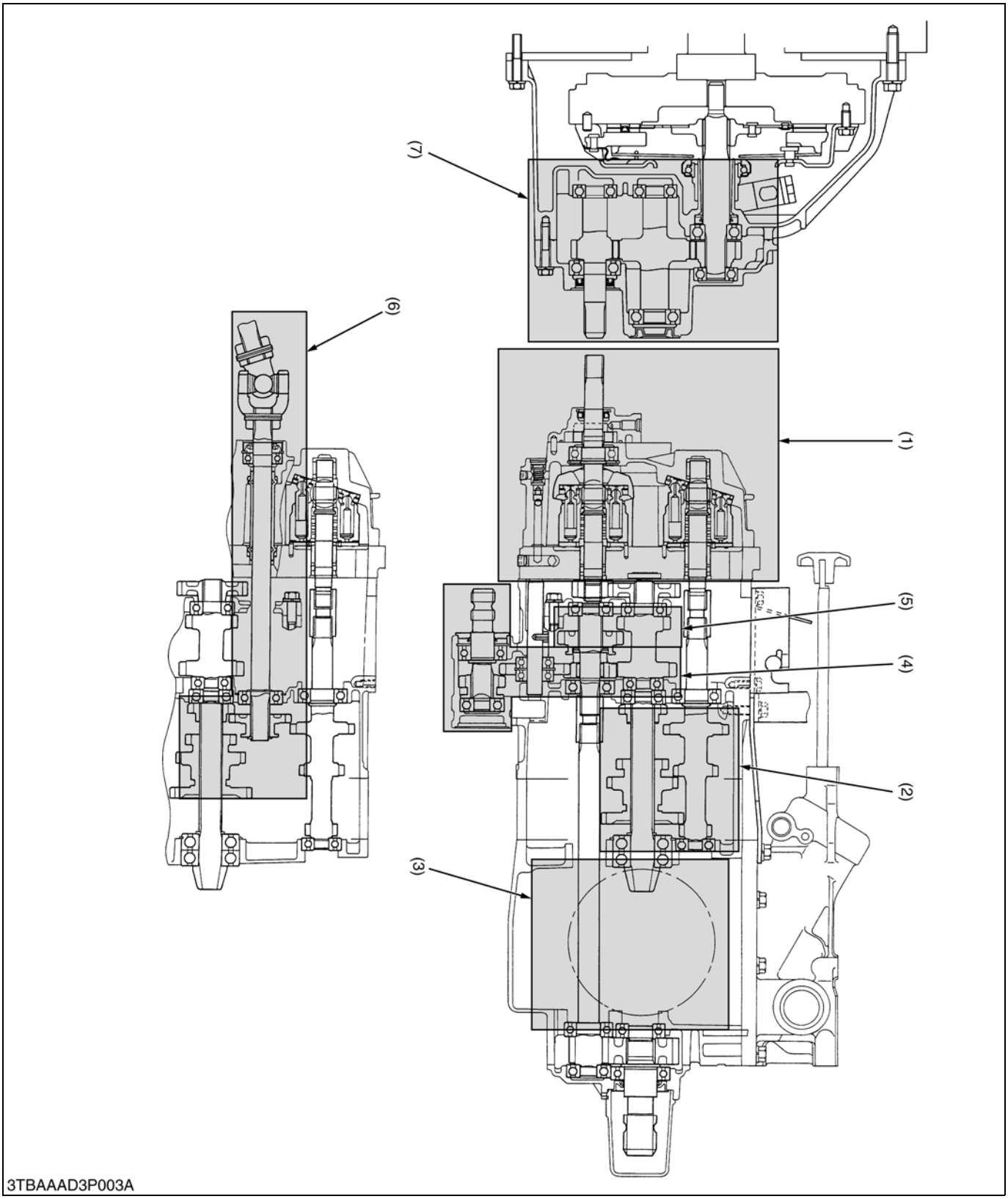

(1) Hydrostatic Transmission Section
(2) Range Gear Shift Section
(3) Differential Gear Section
(4) Mid-PTO Shift Section
(5) Rear PTO Shift Section
(6) Front Wheel Drive Section
(7) Clutch Housing Section

2. TRAVELLING SYSTEM

[1] MAIN GEAR SHIFT SYSTEM (B1710D, B2110D, B2110DB, B2410D, B2410DB)

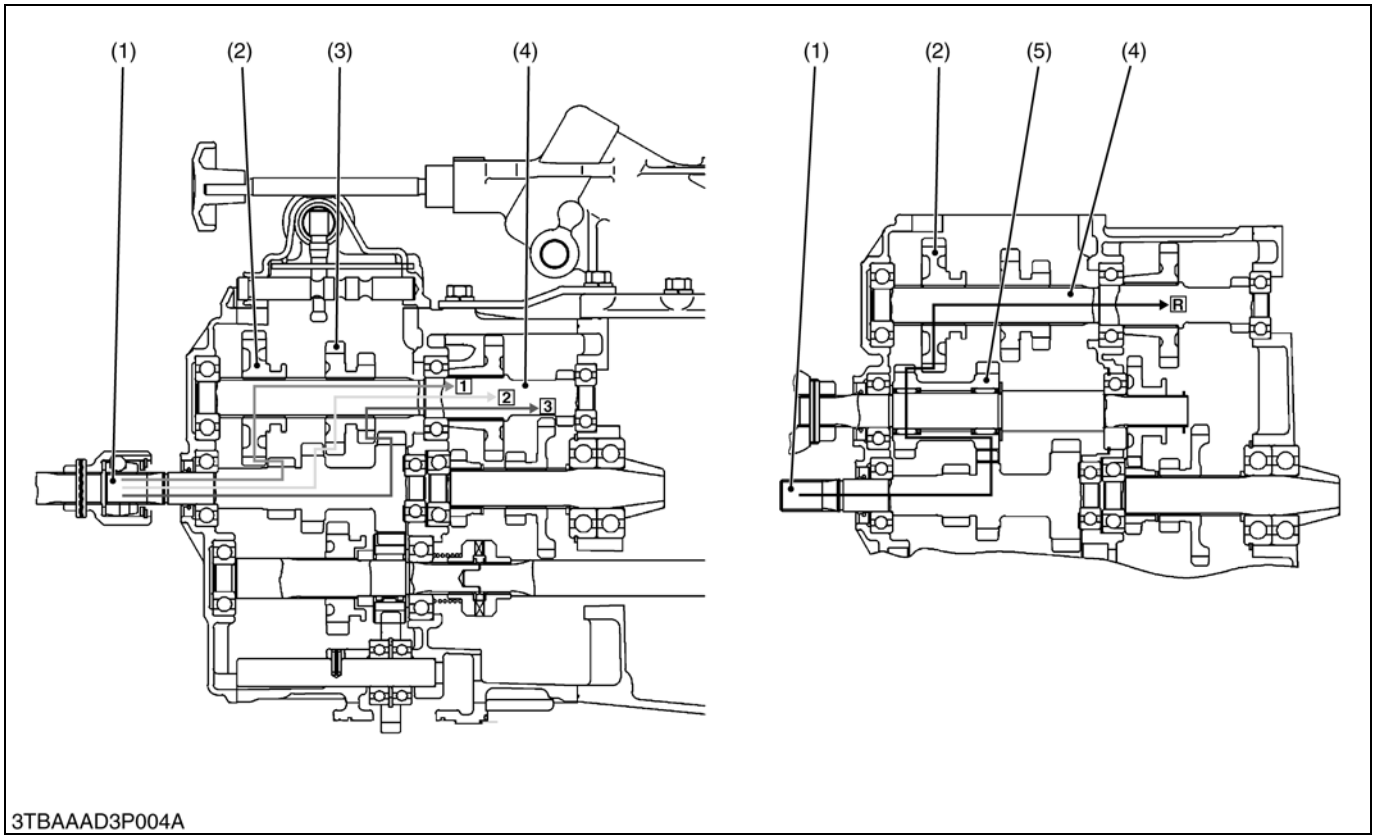

(1) 2nd Gear Shaft with 13T-13T-18T Gear
(2) 30T Shifter Gear
(3) 17T-13T Shifter Gear
(4) 4th Shaft with 11T Gear
(5) 16T-20T Gear

Besides neutral, four kinds of power flow (from clutch shaft to 4th shaft) are available by operating the main gear shift lever to shift positions on the 30T shifter gear (2) and 17T-13T shifter gear (3) on the 4th shaft (4).

■ **1st Position**
2nd Gear Shaft with 13T Gear (1) → 30T Shifter Gear (2) → 4th Shaft (4)

■ **2nd Position**
2nd Gear Shaft with 13T Gear (1) → 17T-(13T) Shifter Gear (3) → 4th Shaft (4)

■ **3rd Position**
2nd Gear Shaft with 18T Gear (1) → (17T)-13T Shifter Gear (3) → 4th Shaft (4)

■ **Reverse Position**
2nd Gear Shaft with 13T Gear (1) → 16T-20T Gear (5) → 30T Shifter Gear (2) → 4th Shaft (4)

[2] HYDROSTATIC TRANSMISSION SYSTEM

(1) Structure

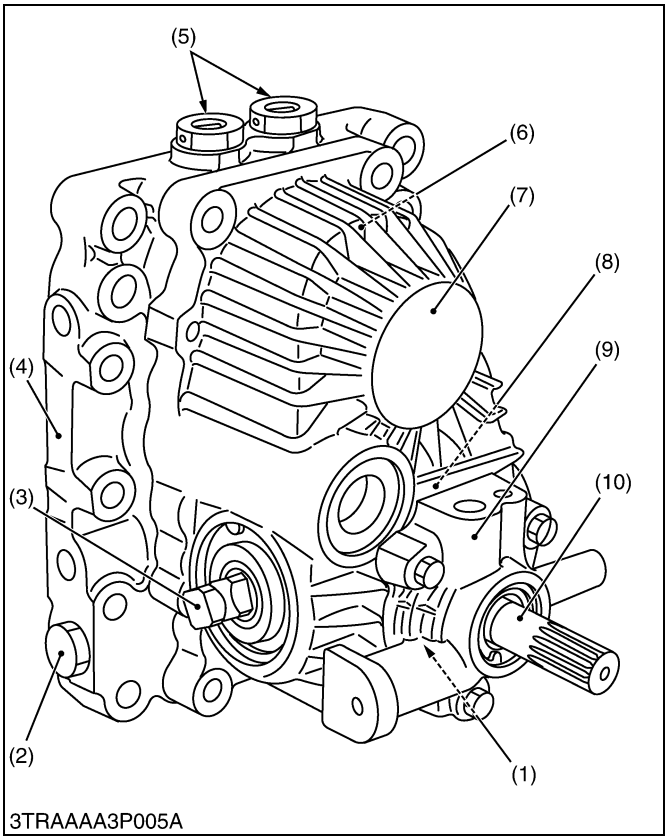

3TRAAAA3P005A

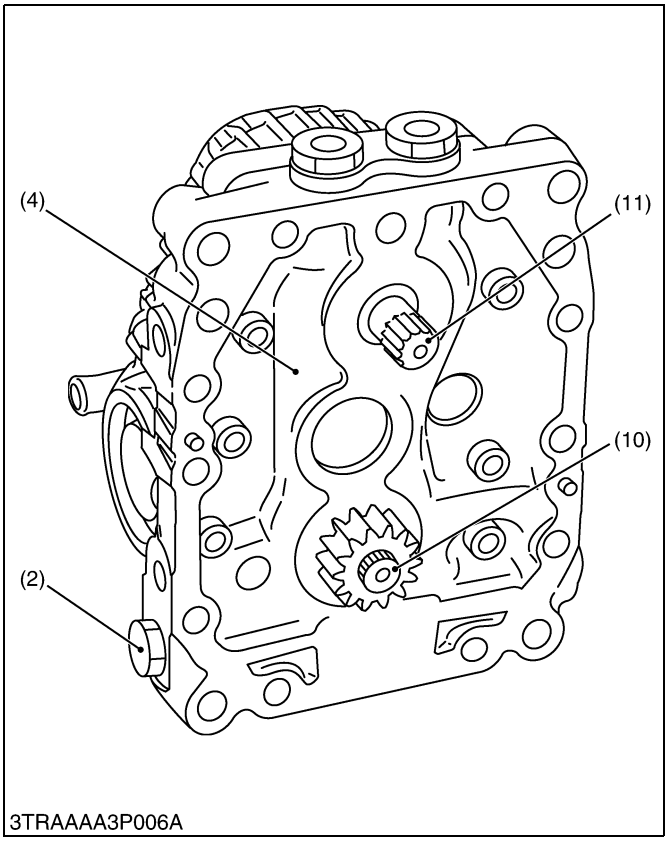

3TRAAAA3P006A

Hydrostatic transmission is composed of variable displacement piston pump, fixed displacement piston motor, charge pump and valve system.

(1) Charge Relief Valve
(2) Check and High Pressure Relief Valve
(3) Trunnion Shaft
(4) Center Section
(5) Neutral Valve
(6) Fixed Displacement Piston Motor
(7) Housing
(8) Variable Displacement Piston Pump
(9) Charge Pump
(10) Input Shaft (Pump Shaft)
(11) Output Shaft

W10132090

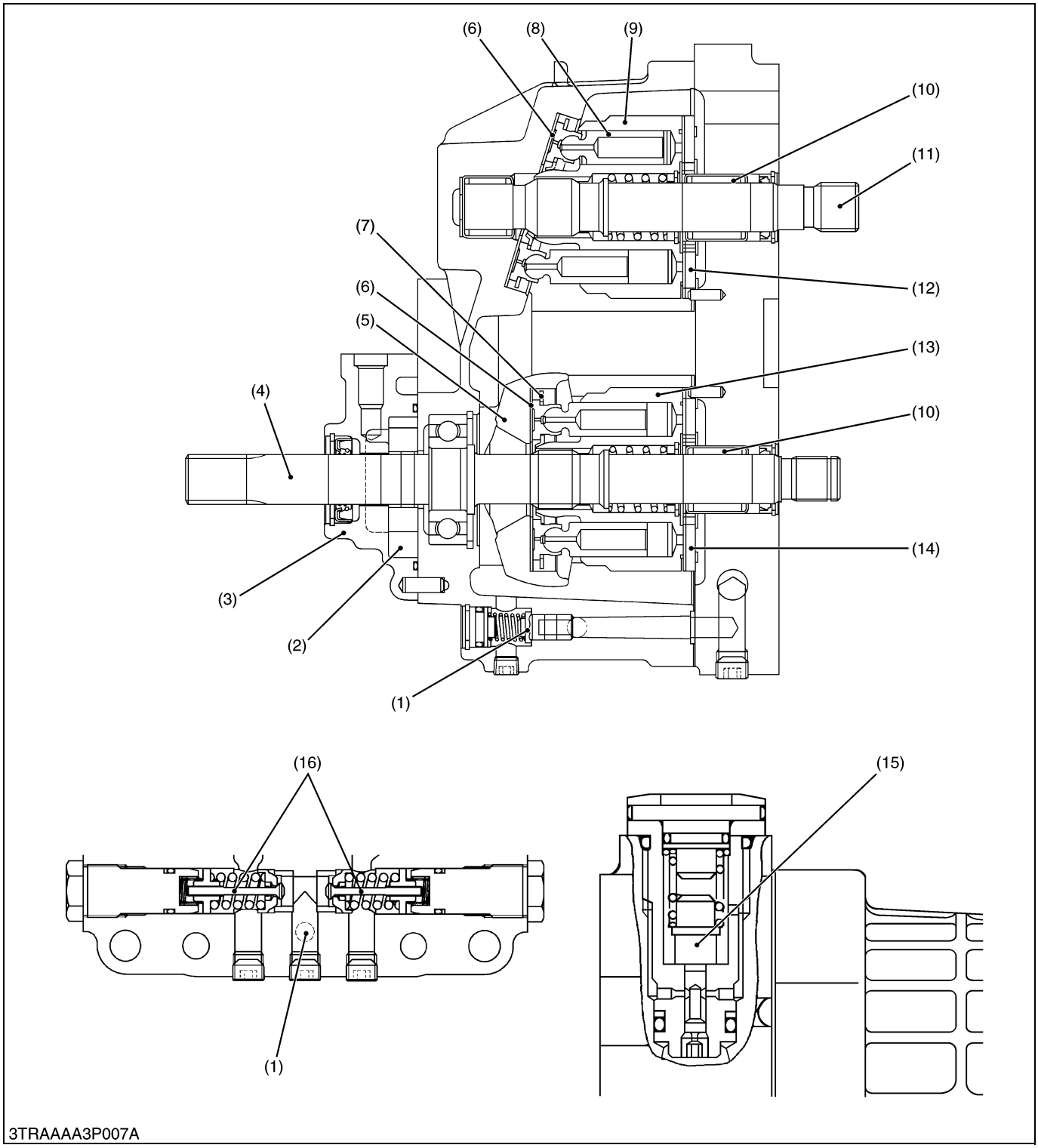

(1) Charge Relief Valve
(2) Charge Pump
(3) Charge Pump Case
(4) Pump Shaft
(5) Variable Swashplate
(6) Thrust Collar
(7) Retainer Plate
(8) Piston
(9) Cylinder Block (Motor)
(10) Needle Bearing
(11) Motor Shaft
(12) Valve Plate (Motor)
(13) Cylinder Block (Pump)
(14) Valve Plate (Pump)
(15) Neutral Valve
(16) Check and High Pressure Relief Valve

(2) Pump and Motor

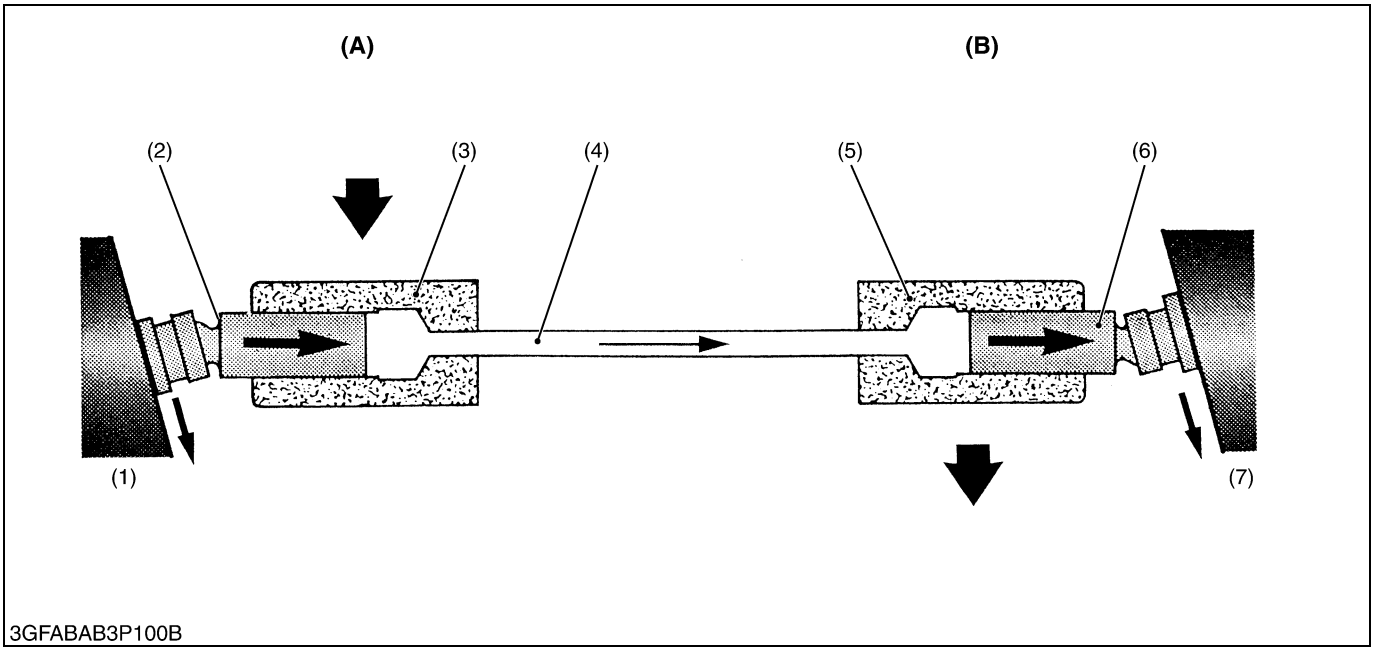

(1) Swashplate
(2) Piston
(3) Cylinder
(4) Oil
(5) Cylinder
(6) Piston
(7) Swashplate
[A] Pump
[B] Motor

Pump and motor cylinder, each containing pistons, are connected by lines. Cylinders and lines are filled with oil. Pistons ride against swashplates(1) and (7) located in pump and motor.

In the pump, as the cylinder (3) rotates, pistons (2) move across the sloping face of swashplate (1) and slide in or out of their cylinder bores. The oil (4), forced out by the pump pistons (2), causes the motor pistons (6) to slide out of their cylinder bores.

In the motor, sliding out of the cylinder and moving across the sloping face of swashplate (7), the pistons rotate the cylinder.

(3) Oil Flow and Valves

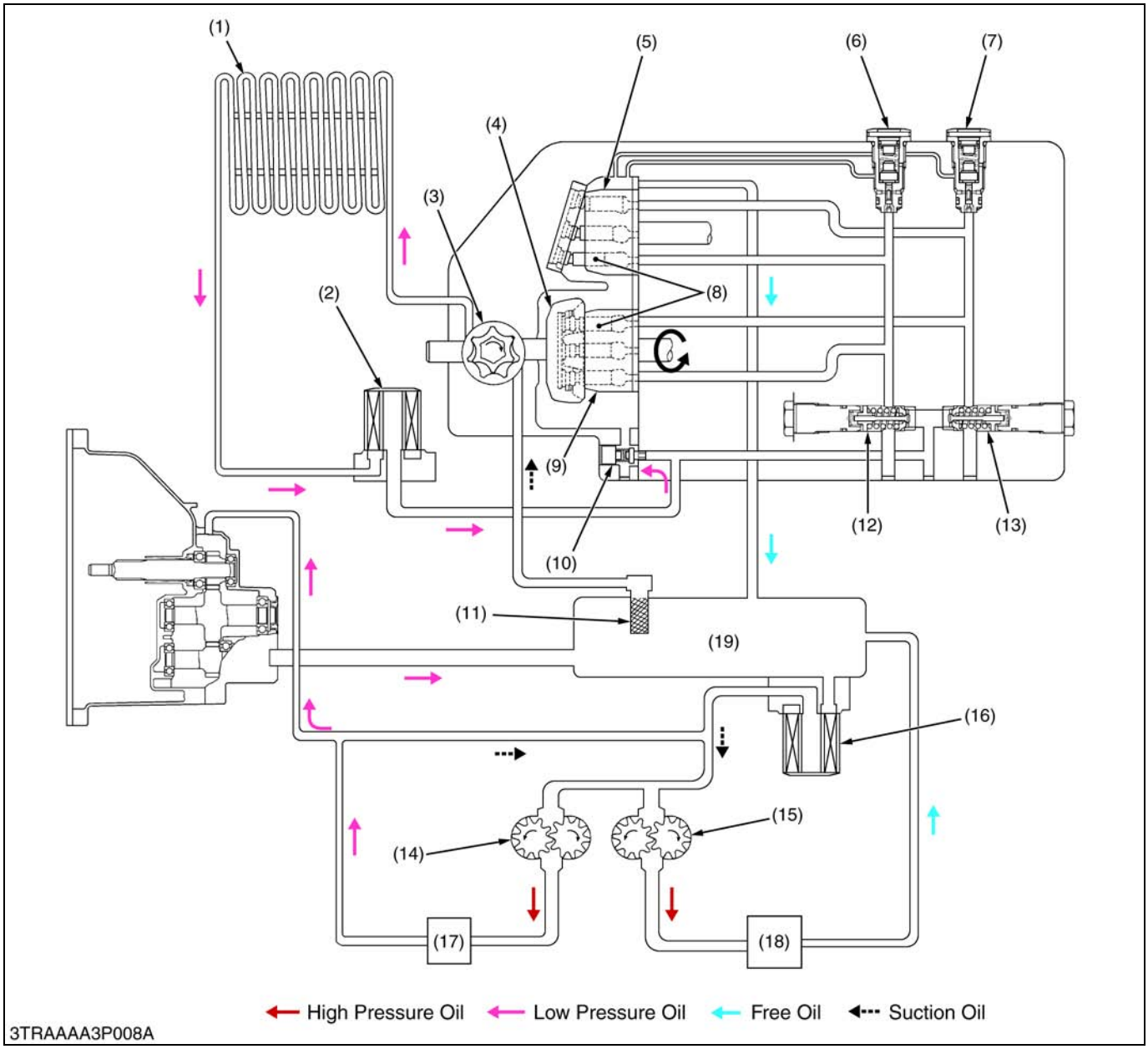

(1) Oil Cooler
(2) Oil Filter (for HST)
(3) Charge Pump
(4) Swashplate
(5) Motor Cylinder Block
(6) Neutral Valve (Forward)
(7) Neutral Valve (Reverse)
(8) Piston
(9) Pump Cylinder Block
(10) Charge Relief Valve
(11) Oil Strainer
(12) Check and High Pressure Relief Valve (Forward)
(13) Check and High Pressure Relief Valve (Reverse)
(14) Hydraulic Pump (for Power Steering)
(15) Hydraulic Pump (for Main Circuit)
(16) Oil Filter
(17) Power Steering Controller
(18) Hydraulic Control Valve
(19) Transmission Case

The pump and motor are joined in a closed hydraulic loop and most of oil circulates within the main oil circuit. A little oil lubricates and oozes out from the clearance between the moving parts of the case. Then oil in the main oil circuit of the HST needs to be supplied a want.

So all of oil fed from charge pump flow to hydrostatic transmission for charging and cooling.

The charge oil aids smooth operation of pistons for pump and motor. The charge oil passes through the oil cooler and oil filter cartridge to charge relief valve port. The rest of oil passes through the charge relief valve into the HST housing. And overflow oil from HST housing return to the transmission case.

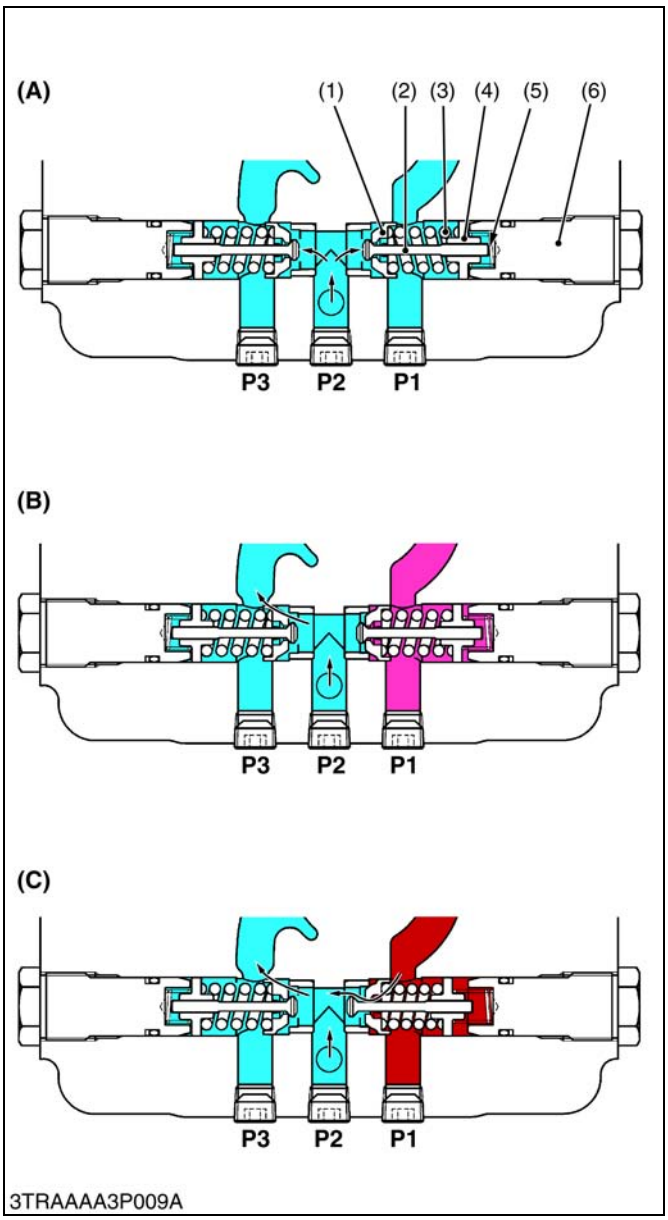

■ Check and High Pressure Relief Valve

The check and high-pressure relief valve consists of pressure poppet (2), check valve seat (1), relief valve spring (3), spring guide (4) and check valve spring (5).

The valve is used to prevent an overload that would happen at a quick start, sudden stop or even during usual running. This valve doubles as a check valve.

The check and high-pressure relief valves are laid out facing each other as shown in the figure.

In neutral, both valves are open and charging oil enters into the main oil circuit through the valves. **(A)**

At normal operation, the check valve in the high-pressure side is closed and it pushes and opens the another one. An excessive charge flow goes through the charge relief valve into HST housing. **(B)**

The check and high-pressure relief valve along the high-pressure line serves as a high-pressure relief valve. If the pressure exceeds a high-pressure limit level, the pressure poppet opens itself against the relief valve spring (3) force and opens the valve seat that is located between the check valve seat (1) and the pressure poppet (2). Now the flow goes from **P1** to **P2** and **P3**. **(C)**

If the **P1** pressure drops, the relief valve spring forces the valve seat closed against the pressure. The high-pressure oil at **P1** does not flow to **P2** any longer.

As discussed above, the check and high-pressure relief valve protects engines, pumps, motors, gears and even the machine itself from overload.

Oil temperature	Valve operating pressure
50 °C (122 °F)	30.9 to 31.9 MPa 315 to 325 kgf/cm^2 4480 to 4622 psi

(1) Check Valve Seat
(2) Pressure Poppet
(3) Relief Valve Spring
(4) Spring Guide
(5) Check Valve Spring
(6) Valve Plug

(A) In Neutral (Stop)
(B) When Check Valve Activating (Normal Operation)
(C) When High Pressure Relief Valve Activating

W10139670

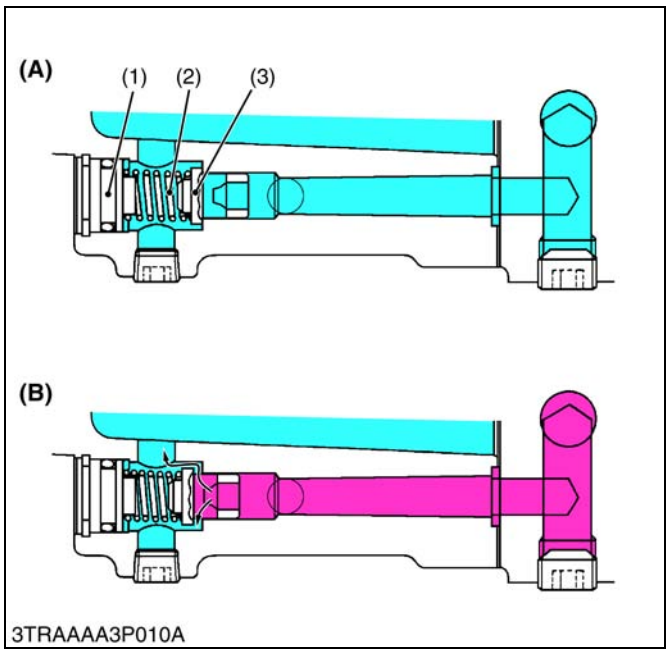

■ Charge Relief Valve

While pumped and filtered oil flows into the main oil circuit through the check and high pressure relief valves, and excessive oil passes to the housing through the charge relief valve.

Oil temperature	Valve operating pressure
50 °C (122 °F)	500 to 800 kPa 5.1 to 8.2 kgf/cm^2 73 to 116 psi

(1) Plug
(2) Spring
(3) Charge Relief Valve

(A) Charge Relief Valve Closed
(B) Charge Relief Valve Opened (When engine is started)

W10142580

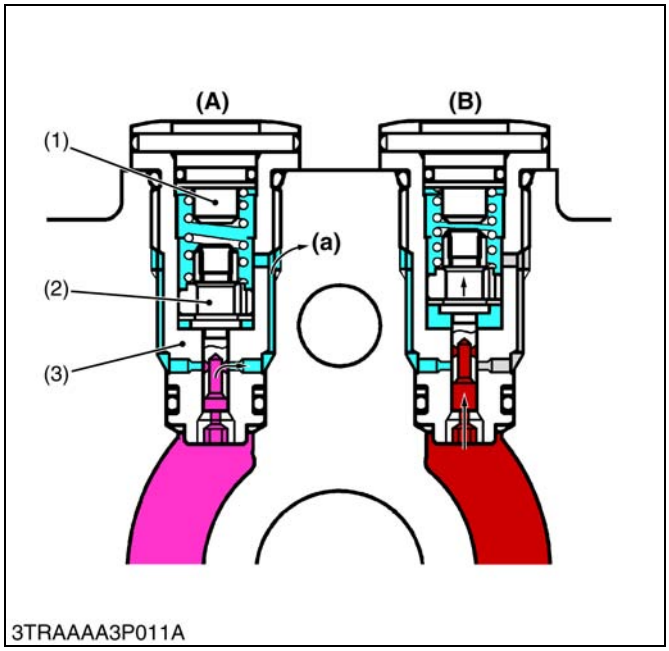

■ Neutral Valve

The neutral valves in the main oil circuit lines are open and pass the oil to the case when in neutral, and the oil pressure in their lines becomes low. And when the oil pressure in the high pressure line increases to a specified pressure, the neutral valve closes.

Oil temperature	Valve operating pressure	
50 °C (122 °F)	Close	7.36 to 9.81 MPa 75 to 100 kgf/cm^2 1067 to 1422 psi
	Open	1.47 to 2.45 MPa 15 to 25 kgf/cm^2 213 to 356 psi

(1) Plug
(2) Neutral Valve Poppet
(3) Neutral Valve Body

(A) Low Pressure Side (Open)
(B) High Pressure Side (Close)
(a) To HST Case

W10144000

(4) Operation

■ Neutral

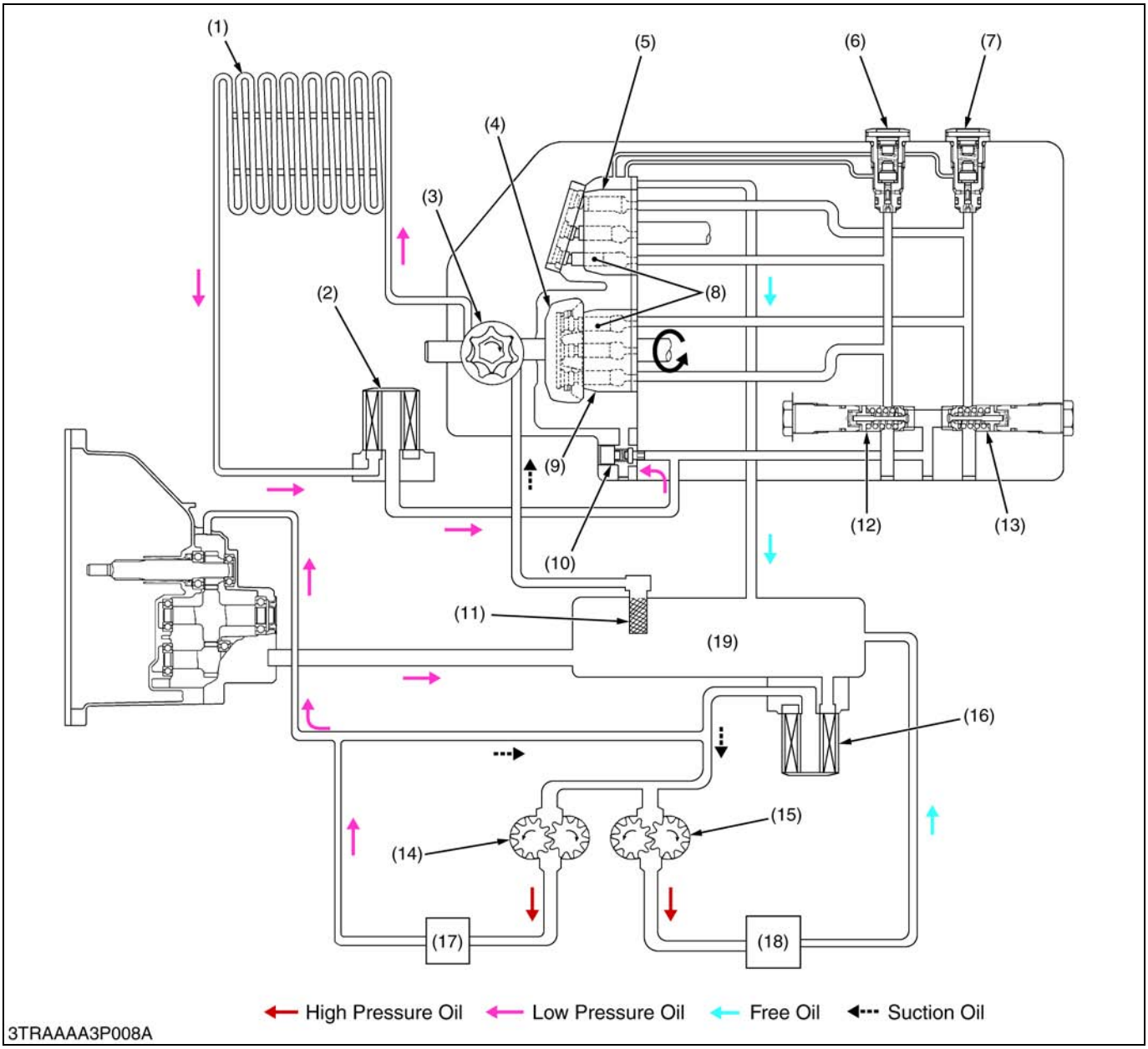

(1) Oil Cooler
(2) Oil Filter (for HST)
(3) Charge Pump
(4) Swashplate
(5) Motor Cylinder Block
(6) Neutral Valve (Forward)
(7) Neutral Valve (Reverse)
(8) Piston
(9) Pump Cylinder Block
(10) Charge Relief Valve
(11) Oil Strainer
(12) Check and High Pressure Relief Valve (Forward)
(13) Check and High Pressure Relief Valve (Reverse)
(14) Hydraulic Pump (for Power Steering)
(15) Hydraulic Pump (for Main Circuit)
(16) Oil Filter
(17) Power Steering Controller
(18) Hydraulic Control Valve
(19) Transmission Case

When the speed control pedal is in neutral, the variable swashplate is at right angles to the pump pistons and they only rotate with cylinder block without reciprocating. Since the oil is not being pumped to the motor, the cylinder block in the motor is stationary and the output shaft does not move.

■ Forward

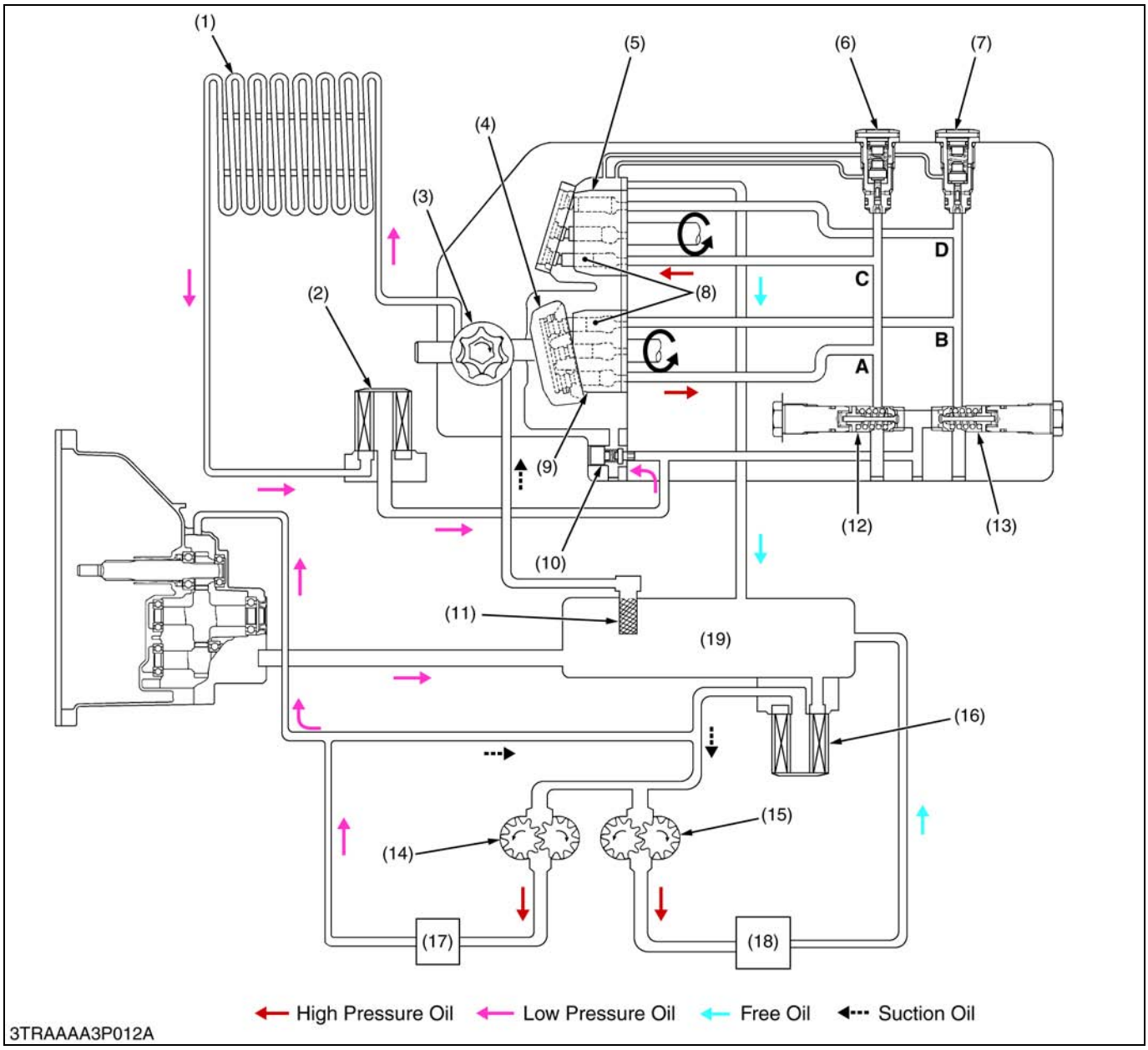

(1) Oil Cooler
(2) Oil Filter (for HST)
(3) Charge Pump
(4) Swashplate
(5) Motor Cylinder Block
(6) Neutral Valve (Forward)
(7) Neutral Valve (Reverse)
(8) Piston
(9) Pump Cylinder Block
(10) Charge Relief Valve
(11) Oil Strainer
(12) Check and High Pressure Relief Valve (Forward)
(13) Check and High Pressure Relief Valve (Reverse)
(14) Hydraulic Pump (for Power Steering)
(15) Hydraulic Pump (for Main Circuit)
(16) Oil Filter
(17) Power Steering Controller
(18) Hydraulic Control Valve
(19) Transmission Case

When the speed control pedal is stepped on and in forward, the variable swashplate is tilted as shown in figure above.

As the pump cylinder block rotates with the input shaft, oil is forced out of pump port **A** at high pressure. As pressure oil enters motor port **C**, the pistons, which align with port **C**, are pushed against the swashplate and slide down the inclined surface.

Then the output shaft rotates with the motor cylinder block. This drives the machine forward and the angle of pump swashplate determines the output shaft speed.

As the motor cylinder block continues to rotate, oil is forced out of motor port **D** at low pressure and returns to the pump port **B**.

■ Reverse

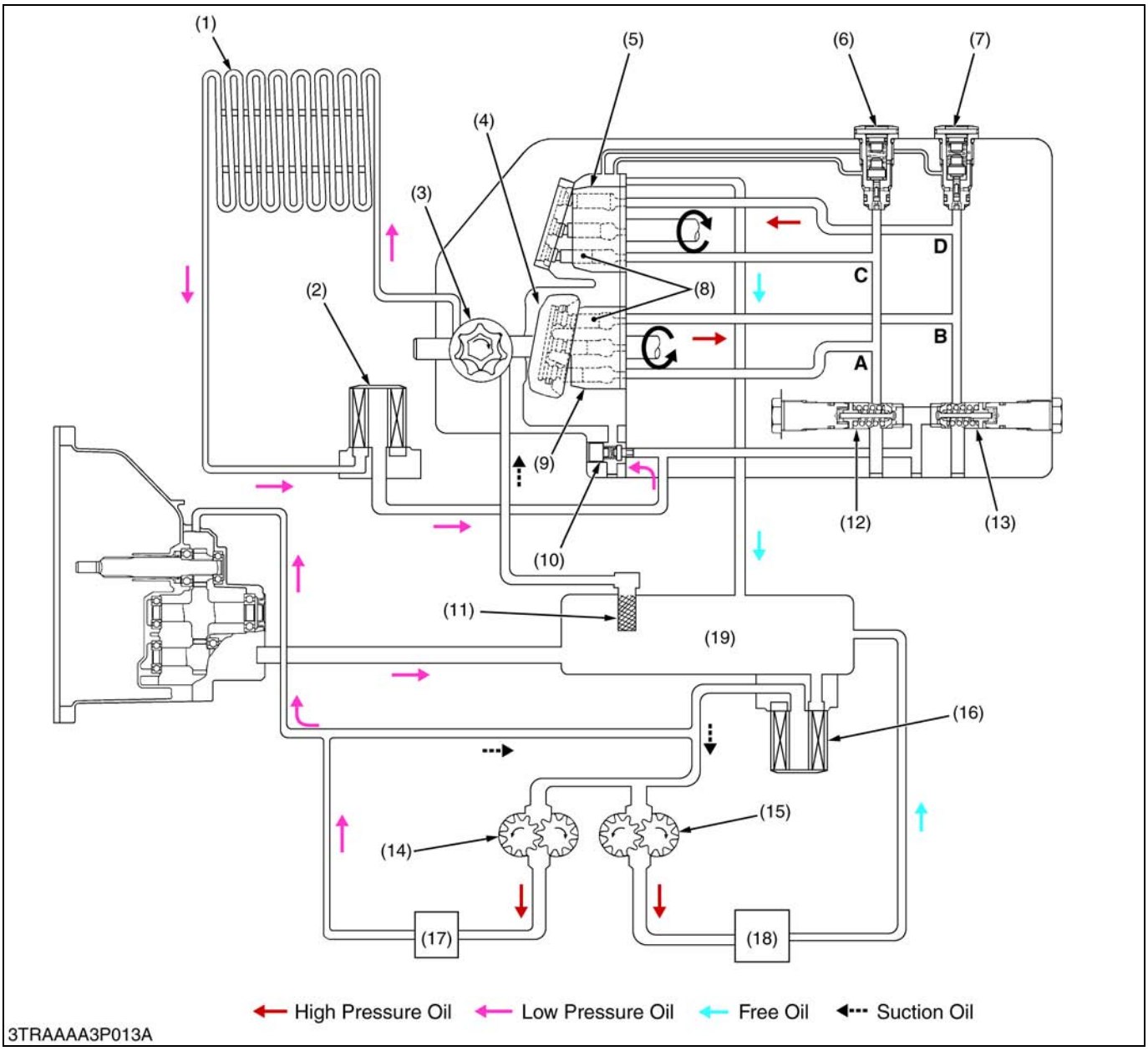

(1) Oil Cooler
(2) Oil Filter (for HST)
(3) Charge Pump
(4) Swashplate
(5) Motor Cylinder Block
(6) Neutral Valve (Forward)
(7) Neutral Valve (Reverse)
(8) Piston
(9) Pump Cylinder Block
(10) Charge Relief Valve
(11) Oil Strainer
(12) Check and High Pressure Relief Valve (Forward)
(13) Check and High Pressure Relief Valve (Reverse)
(14) Hydraulic Pump (for Power Steering)
(15) Hydraulic Pump (for Main Circuit)
(16) Oil Filter
(17) Power Steering Controller
(18) Hydraulic Control Valve
(19) Transmission Case

When the speed control pedal is stepped on and in reverse, the variable swashplate is tilted as shown in figure above.

As the pump cylinder block rotates with the input shaft, oil is forced out of pump port **B** at high pressure. As pressure oil enters motor port **D**, the pistons, which align with port **D**, are pushed against the swashplate and slide down the inclined surface.

Then the output shaft rotates with the motor cylinder block. This drives the machine rearward and the angle of pump swashplate determines the output shaft speed.

As the motor cylinder block continues to rotate, oil is forced out of motor port **C** at low pressure and returns to the pump port **A**.

(5) Control Linkage

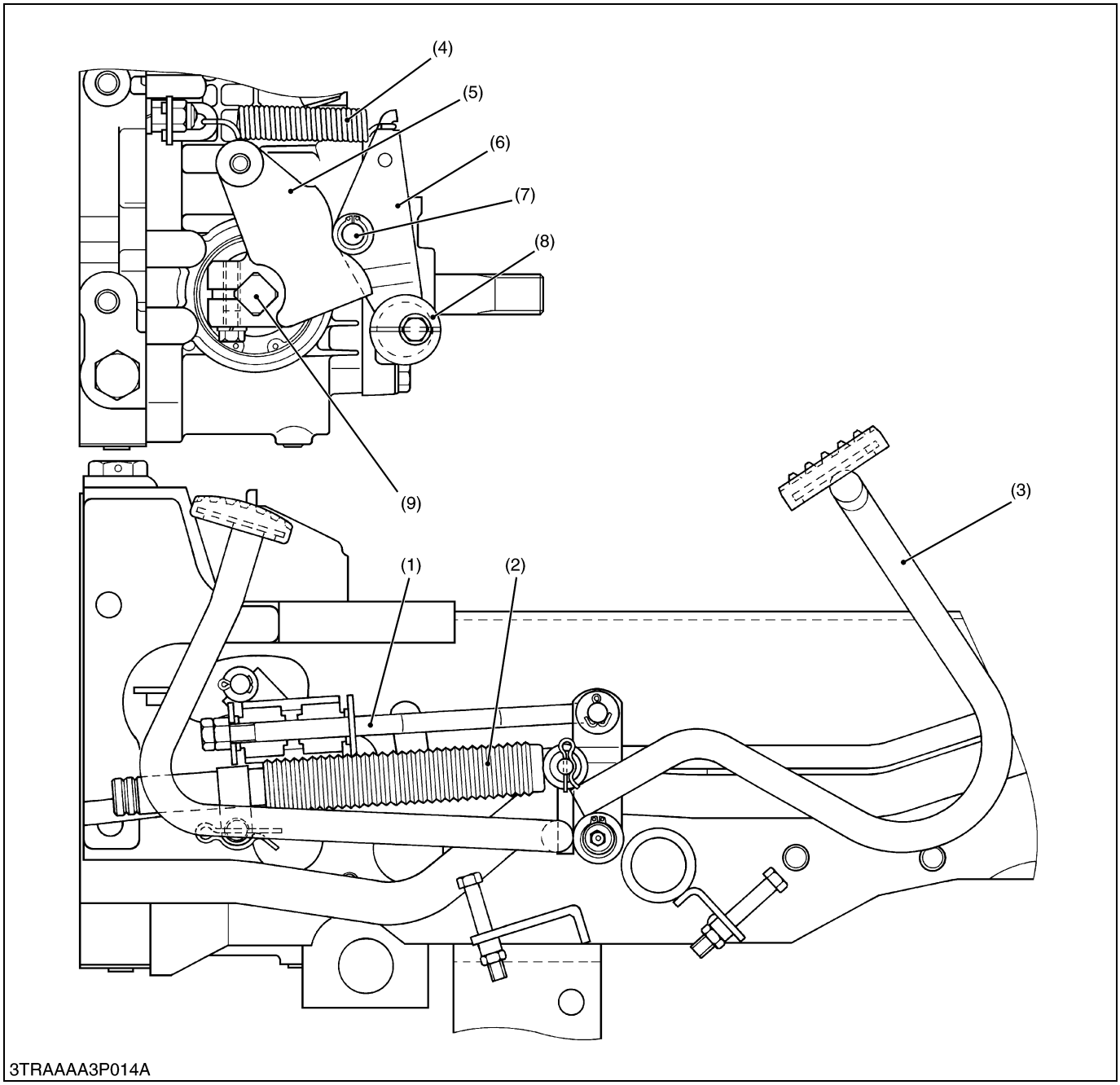

(1) Speed Control Rod Assembly
(2) Damper
(3) Speed Control Pedal
(4) Spring
(5) Neutral Holder
(6) Neutral Holder Arm
(7) Roller
(8) Neutral Adjuster
(9) Trunnion Shaft

The speed control pedal (3) and the trunnion shaft (9) of variable swashplate are linked with the speed control rod (1) and the neutral holder (5). As the front footrest of the pedal is depressed, the swashplate rotates and forward travelling speed increased. Depressing the rear footrest increases reverse speed.

The roller (7) on the neutral holder arm (6) is held with spring seats the detent of the neutral holder (5) so that the neutral holder returns to neutral. Then, the swashplate is returned to neutral with the neutral holder, when the pedal is released. The damper (2) connected to the speed control pedal restricts the movement of the linkage to prevent abrupt operation or reversing.

[3] RANGE GEAR SHIFT SYSTEM

(1) B1710, B2110, B2410 (Two Speeds)

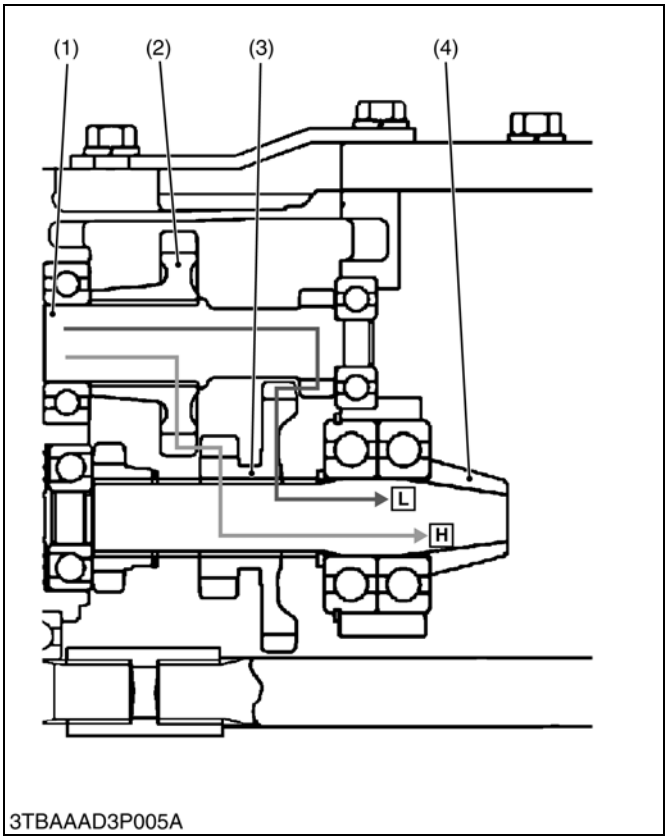

Two kinds of power flow (from 4th shaft to spiral bevel pinion shaft) are available by operating the high-low gear shift lever to shift the gear (3) on the spiral bevel pinion shaft (4).

■ **Low Position**

4th Gear Shaft (1) → Shifter Gear (3) → Spiral Bevel Pinion Shaft (4)

■ **High Position**

4th Gear Shaft (1) → Gear (2) → Shifter Gear (3) → Spiral Bevel Pinion Shaft (4)

[Manual Transmission]	[Hydrostatic Transmission]
(1) 4th Gear Shaft with 11T Gear	(1) 4th Gear Shaft with 16T Gear
(2) 23T Gear	(2) 22T Gear
(3) 12T-32T Shifter Gear	(3) 13T-27T Shifter Gear
(4) Spiral Bevel Pinion Shaft	(4) Spiral Bevel Pinion Shaft

W10159420

(2) B2710 (Three Speeds)

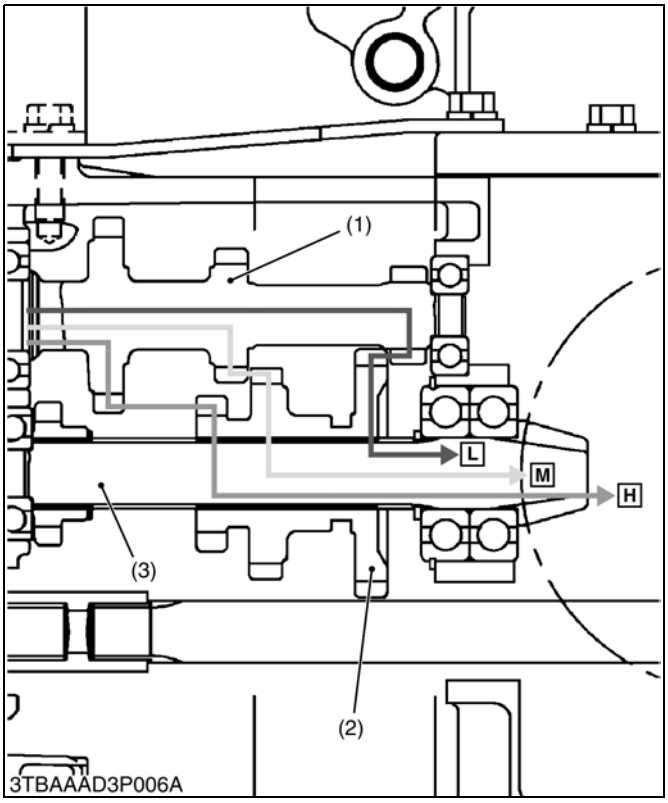

Three kinds of power flow (from 4th shaft to spiral bevel pinion shaft) are selected by operating the range gear shift lever to shift the gears (2) on the spiral bevel pinion shaft (3).

■ **Low Position**

4th Gear Shaft 11T (1) → Shifter Gear (2) → Spiral Bevel Pinion Shaft (3)

■ **Middle Position**

4th Gear Shaft 16T (1) → Shifter Gear (2) → Spiral Bevel Pinion Shaft (3)

■ **High Position**

4th Gear Shaft 23T (1) → Shifter Gear (2) → Spiral Bevel Pinion Shaft (3)

(1) 4th Gear Shaft with 11T-16T-23T Gear
(2) 14T-27T-32T Shifter Gear
(3) Spiral Bevel Pinion Shaft

W10161470

[4] FRONT WHEEL DRIVE SYSTEM

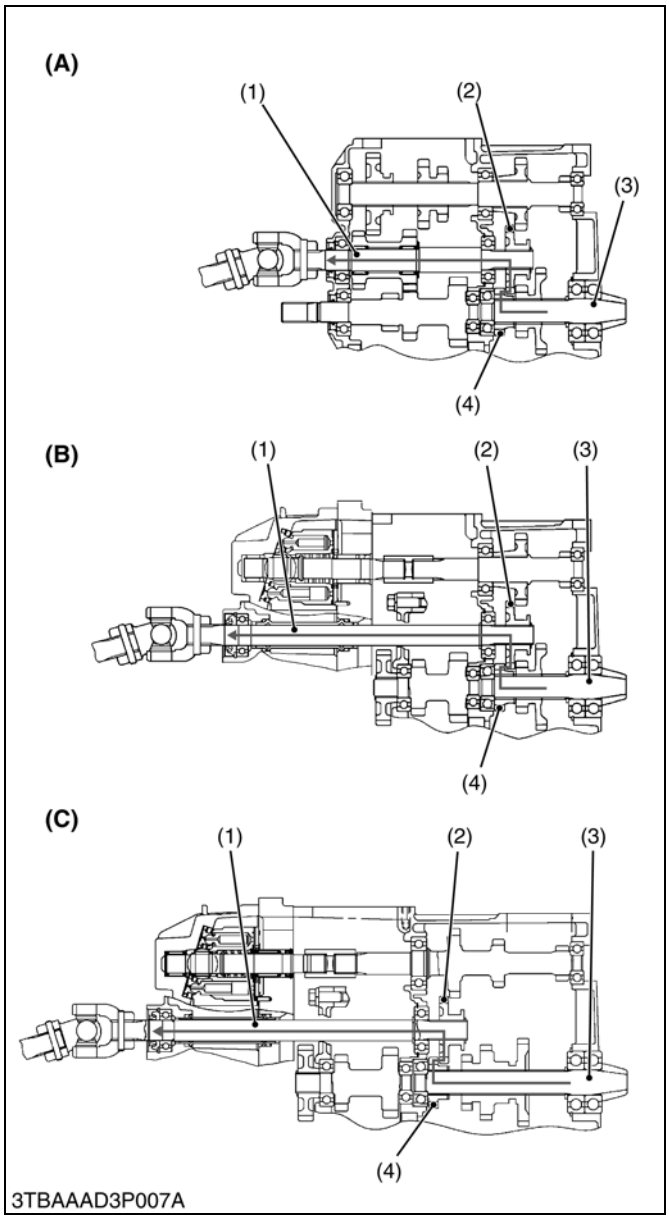

2-wheel drive or 4-wheel drive is selected by changing the position of shifter gear (2) with the front wheel drive lever. When the front wheel drive lever is set to **"Disengaged"**, the shifter gear (2) is neutral and power is not transmitted to the front wheel drive shaft (1).

When the front wheel drive lever is set to **"Engaged"**, the shifter gear (2) slides to the right to engage with gear (4) on the spiral bevel pinion shaft (3). Therefore, the front drive shaft is actuated to drive the front wheels.

(1) Front Wheel Drive Shaft
(2) Shifter Gear
(B1710, B2110, B2410 : 20T)
(B2710 : 19T)
(3) Spiral Bevel Pinion Shaft
(4) Gear
(B1710, B2110, B2410 : 13T)
(B2710 : 14T)

(A) B1710D, B2110D, B2110DB, B2410D, B2410DB
(B) B2110HDB, B2410HDB
(C) B2710HDB

W10164150

3. PTO SYSTEM

[1] REAR PTO SYSTEM

Besides neutral, one kind of power flow are available by operating the PTO shift lever to shift positions of 17T shifter gear (2) for rear PTO.

(1) Manual Transmission Type

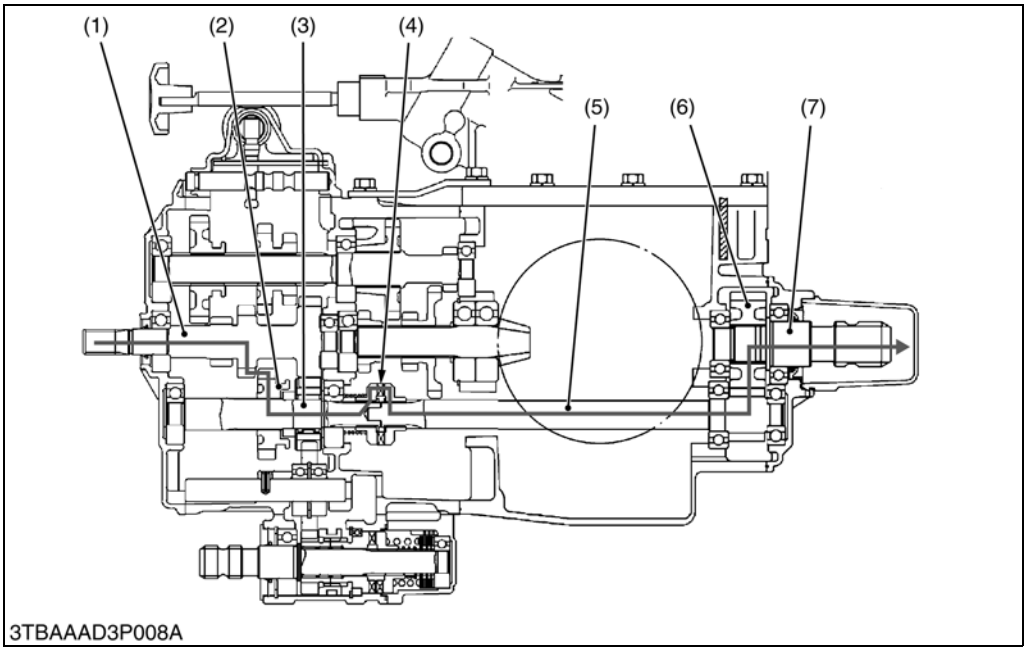

(1) 2nd Gear Shaft with 13T, 13T and 18T Gear
(2) 17T Shifter Gear
(3) 3rd Shaft
(4) One-way Clutch
(5) 5th Gear Shaft with 11T Gear
(6) 24T Gear
(7) Rear PTO Shaft

W10165930

■ **Rear PTO Shift Lever ON Position**

2nd Gear Shaft with 13T Gear (1) → 17T Shifter Gear (2) → 3rd Shaft (3) → One-way Clutch (4) → 5th Gear Shaft with 11T Gear (5) → 24T Gear (6) → Rear PTO Shaft (7)

(2) Hydrostatic Transmission Type

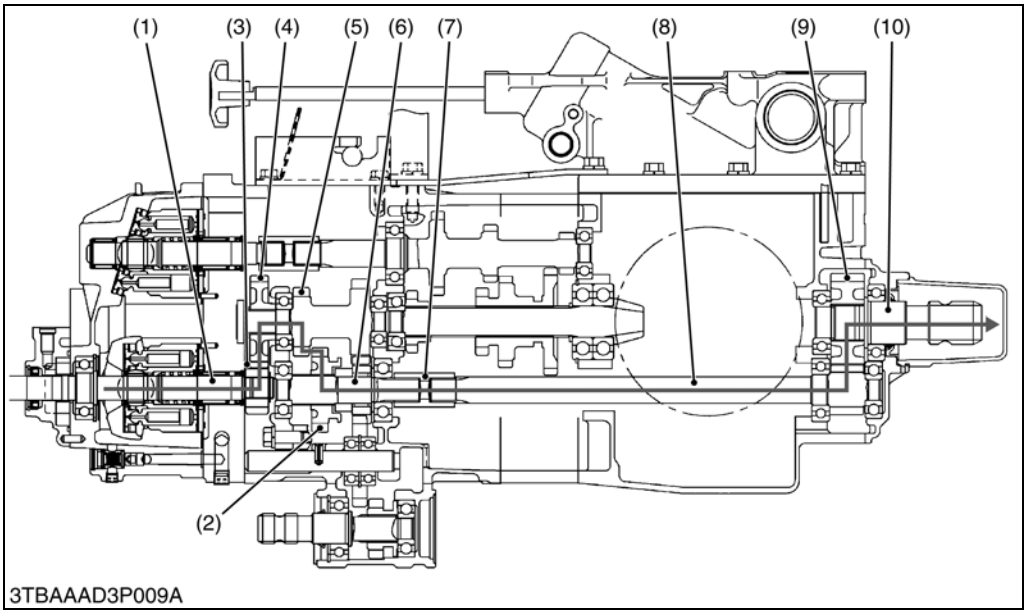

(1) HST Pump Shaft
(2) 17T Shifter Gear
(3) 14T Gear
(4) 27T Gear
(5) 2nd Gear Shaft with 13T and 18T Gear
(6) 3rd Shaft
(7) Coupling
(8) 5th Shaft with 11T Gear
(9) 24T Gear
(10) Rear PTO Shaft

W10169190

■ **Rear PTO Shift Lever ON Position**

HST Pump Shaft (1) → 14T Gear (3) → 27T Gear (4) → 2nd Gear Shaft with 13T Gear (5) → 17T Shifter Gear (2) → 3rd Shaft (6) → Coupling (7) → 5th Shaft with 11T Gear (8) → 24T Gear (9) → Rear PTO Shaft (10)

[2] MID-PTO SYSTEM

Besides neutral, one kind of power flow are available by operating the mid-PTO shift lever to shift positions of shifter (5) or 11T shifter gear (7) for mid-PTO.

(1) Manual Transmission Type

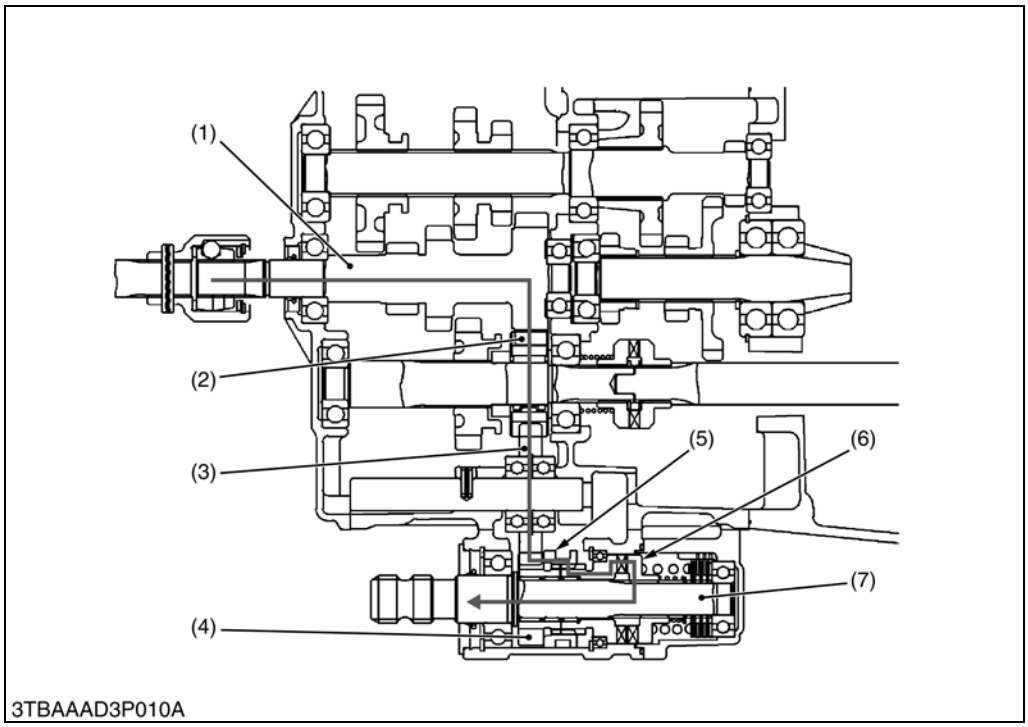

(1) 2nd Gar Shaft with 13T, 13T and 18T Gear
(2) 13T Gear
(3) 19T Gear
(4) 11T Gear
(5) Shifter
(6) One-way Clutch
(7) Mid-PTO Shaft

W10171550

■ **Mid-PTO Shift Lever ON Position**

2nd Gear Shaft with 18T Gear (1) → 13T Gear (2) → 19T Gear (3) → 11T Gear (4) → Shifter (5) → One-way Clutch (6) → Mid-PTO Shaft (7)

(2) Hydrostatic Transmission Type

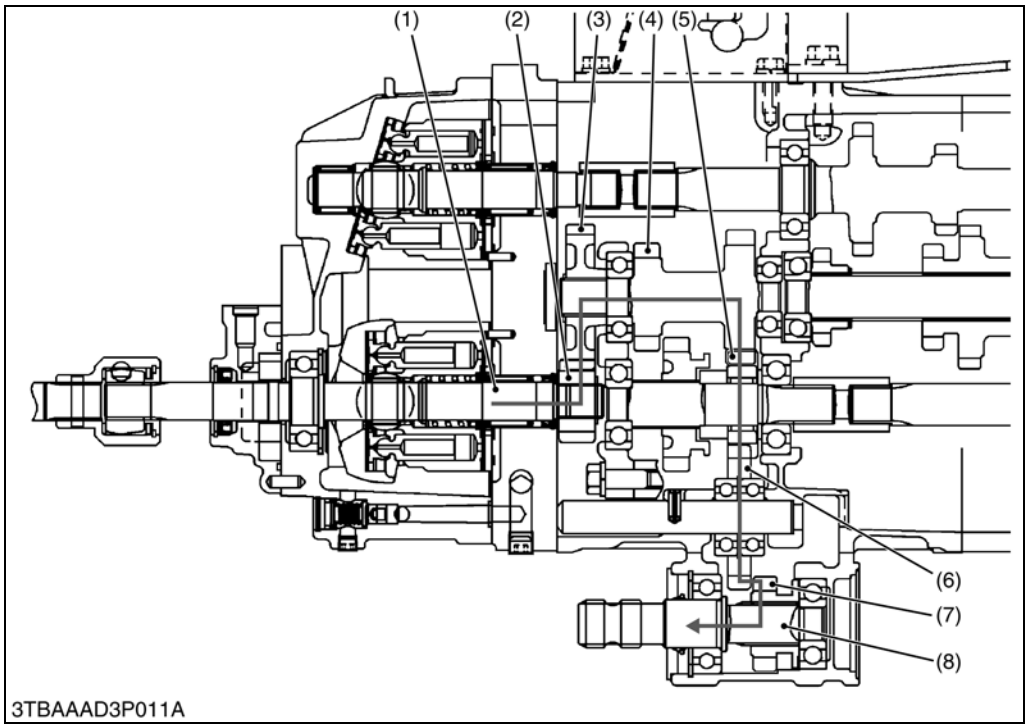

(1) HST Pump Shaft
(2) 14T Gear
(3) 27T Gear
(4) 2nd Gear Shaft with 13T and 18T Gear
(5) 13T GEar
(6) 19T Gear
(7) 11T Shifter Gear
(8) Mid-PTO Shaft

W10173010

■ **Mid-PTO Shift Lever ON Position**

HST Pump Shaft (1) → 14T Gear (2) → 27T Gear (3) → 2nd Gear Shaft with 18T Gear (4) → 13T Gear (5) → 19T Gear (6) → 11T Shifter Gear (7) → Mid-PTO Shaft (8)

[3] ONE-WAY CLUTCH SYSTEM (MANUAL TRANSMISSION MODEL)

The one-way clutch system is adapted in the PTO system of manual transmission models. There are two one-way clutch and they are located as shown figure below.

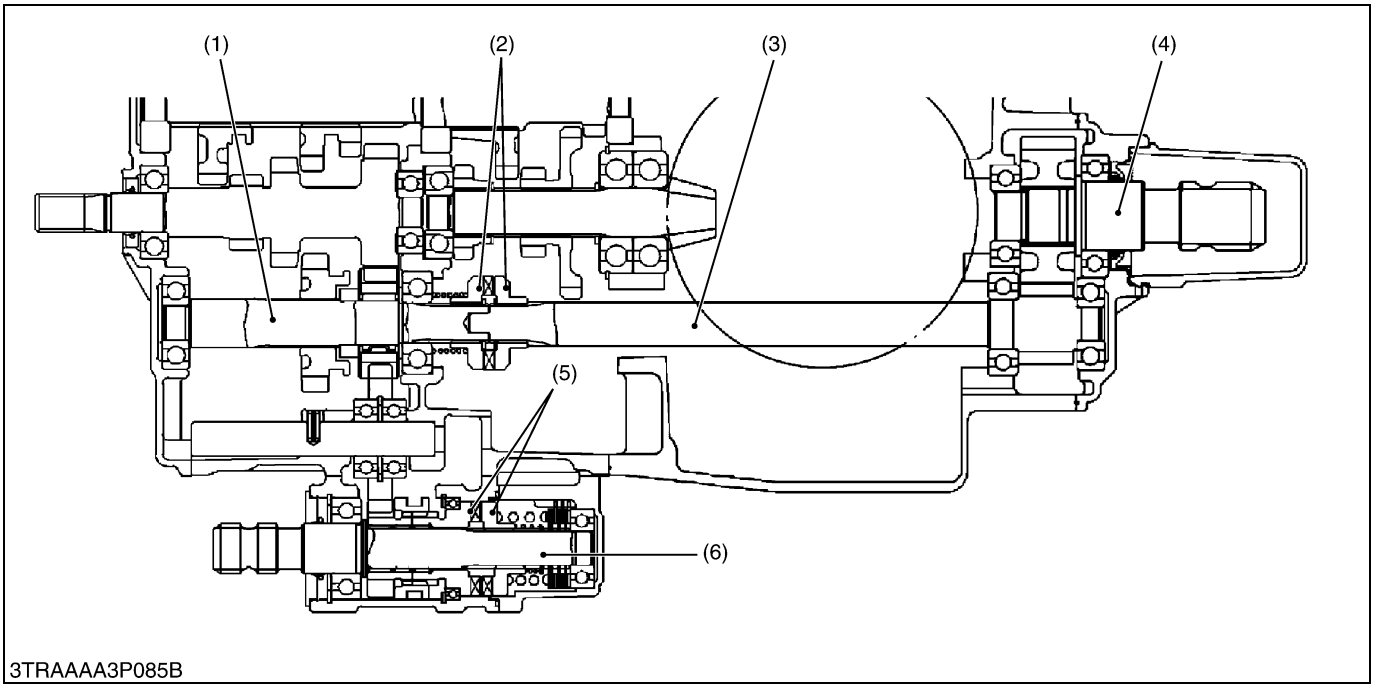

(1) 3rd Shaft
(2) One-way Clutch Cam for Rear PTO
(3) 5th Gear Shaft
(4) Rear PTO Shaft
(5) One-way Clutch Cam for Mid-PTO
(6) Mid-PTO Shaft

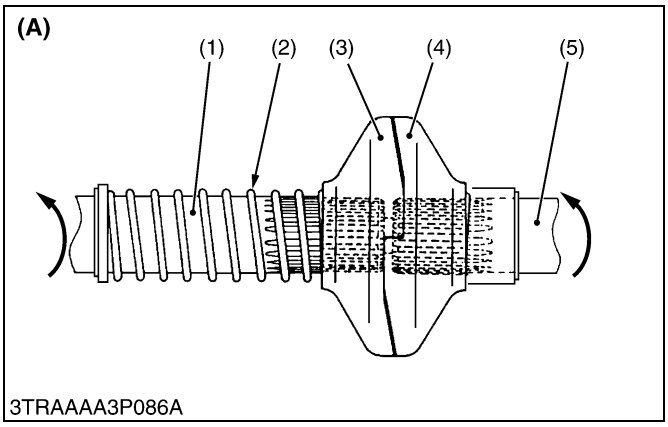

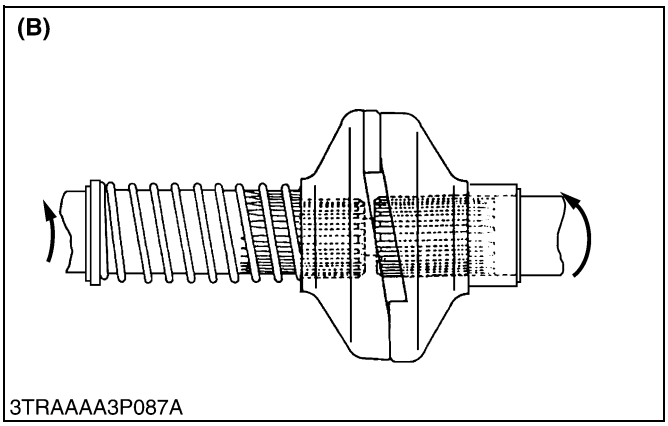

■ One-way Clutch for Rear PTO

The one-way clutch cam is also called an overrunning clutch. It is composed of a pair of clutch cams (3), (4) and a cam spring (2). One of the clutch cam is splined to the shaft (1), and the other is splined to the shaft (5).

These two clutch cam (3), (4) are engaged with each other by the force of the cam spring. As long as the shaft (1) is rotating faster than the shaft (5) these two clutch cams (3), (4) will remain engaged, and the shaft (5) is driven.

But, if the PTO shaft drives a rotary mower as an implement, for example, and the source of power is stopped by pressing the clutch pedal, or if the engine speed is lowered, the clutch cam (4) will overrun as shown in the figure. This overrunning is caused by the inertia of the mower blades. Then, engagement will not take place until the shaft (1) is running faster than the shaft (5).

In this way, the one-way clutch cam protects the transmission and engine power train against damage, by allowing the PTO shaft and the shaft (5) to overrun if PTO shaft overspeeds.

(1) 3rd Shaft
(2) Clutch Cam Spring
(3) Clutch Cam
(4) Clutch Cam
(5) 5th Gear Shaft

(A) Cam is engaging
(B) PTO shaft is overrunning

W10175320

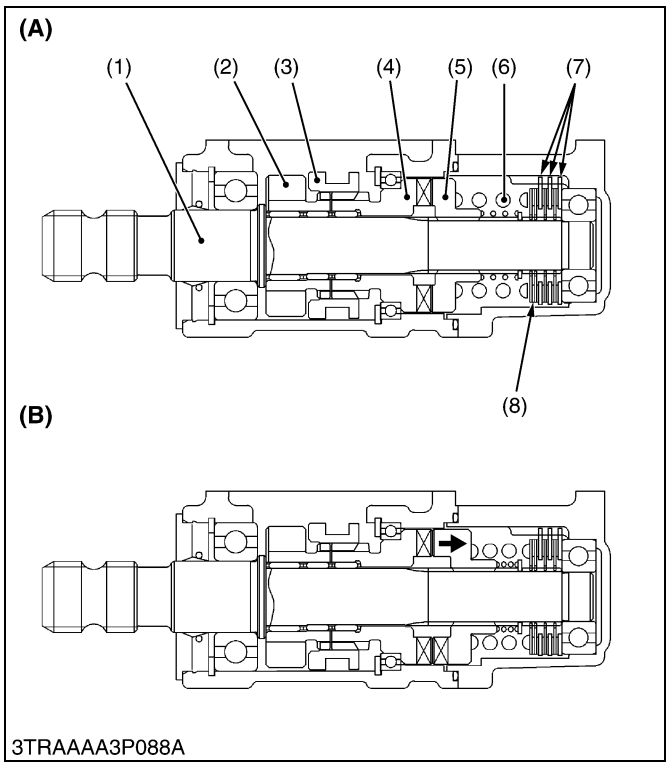

■ One-way Clutch for Mid-PTO

It is composed of pair of clutch cams (4), (5) clutch springs, brake discs and pressure plate. When the mid-PTO shift lever is at ON position, one of the clutch cam (4) is connected to gear (2) by the shifter (3). The other clutch cam (5) is splined to the mid-PTO shaft (1).

This one-way clutch system also functions as same as rear PTO one-way clutch.

If the source of power is stopped by pressing the clutch pedal or disengaging the shifter (3), the clutch cam (5) will overrun and move to press the brake disc (8) by spring (6). As a result, rotation of mid-PTO shaft (1) is reduced or stopped.

(1) Mid-PTO Shaft
(2) Gear
(3) Shifter
(4) Clutch Cam
(5) Clutch Cam
(6) Spring
(7) Pressure Plate
(8) Brake Disc

(A) Mid-PTO Engaged
(B) Mid-PTO Disengaged

W10176500

4. DIFFERENTIAL GEAR SYSTEM

[1] STRUCTURE

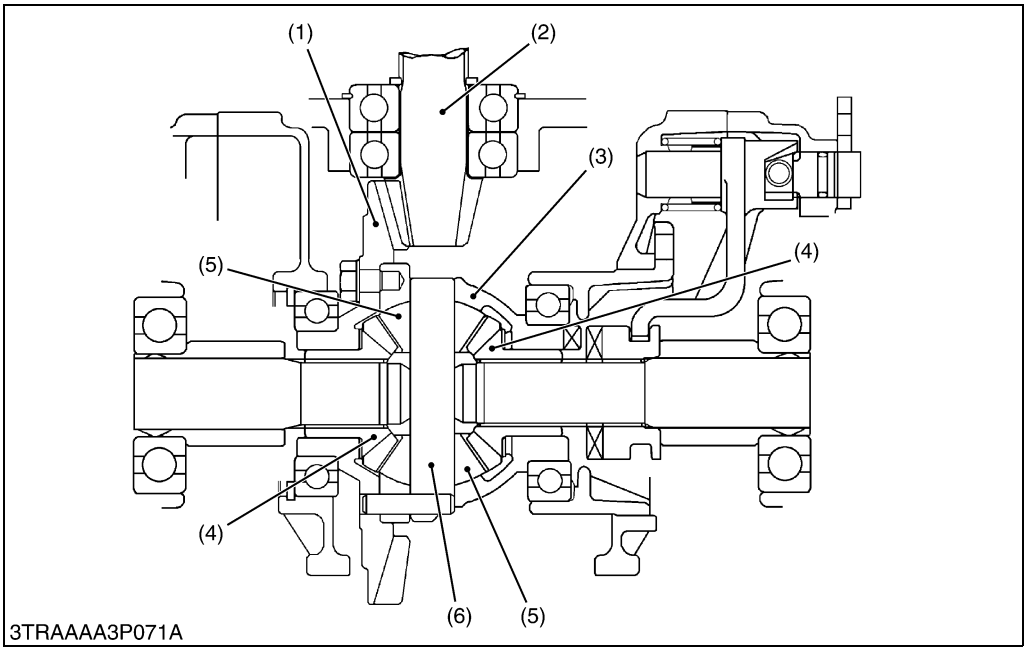

(1) Spiral Bevel Gear
(2) Spiral Bevel Pinion
(3) Differential Gear Case
(4) Differential Side Gear
(5) Differential Pinion
(6) Differential Pinion Shaft

W10177880

The differential gear assembly is a mechanism to provide smooth steering. It automatically provides different optimum torques to the right and left wheels according to road resistance and braking friction at the wheels.

The differential gear assembly is composed of the differential case, differential pinions, differential side gears, differential pinion shaft, spiral bevel gear, etc..

[2] OPERATION

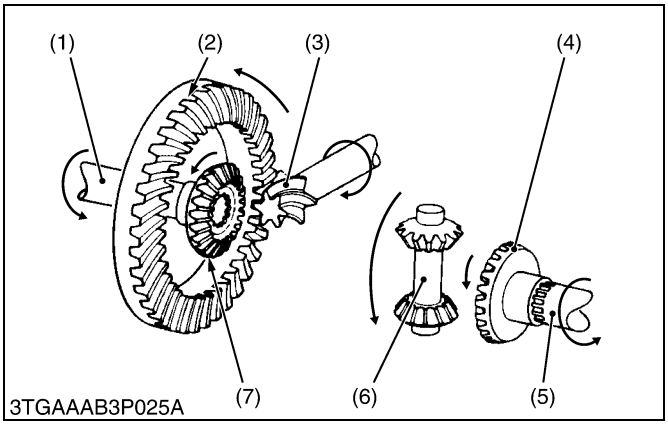

■ During Straight Running

Rotation of the spiral bevel pinion (3) is transmitted to the spiral bevel gear (2) bolted to the differential case. When road resistance to the right and left wheels are equal, the differential pinions (6), and differential side gears (4), (7) are carried around by the spiral bevel gear (2), and differential case rotate as a unit. Differential gear shaft (1), (5) receive the same rotation and both wheels travel at the same speed.

(1) Differential Gear Shaft
(2) Spiral Bevel Gear
(3) Spiral Bevel Pinion
(4) Differential Side Gear
(5) Differential Gear Shaft
(6) Differential Pinion
(7) Differential Side Gear

W10198320

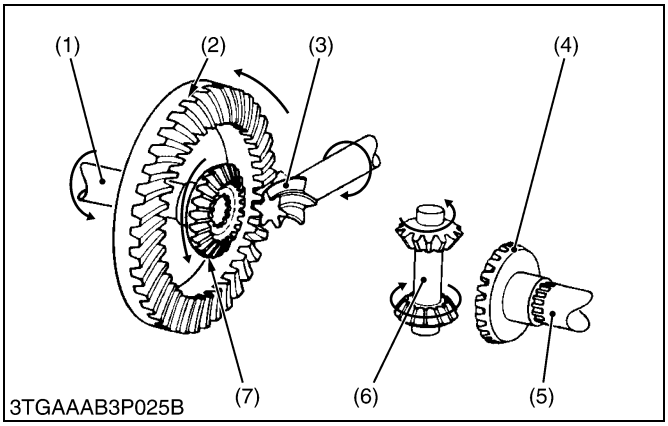

■ During Turning

The power from the engine on spiral bevel pinion (3) rotates spiral bevel gear (2). When turning a corner, the outer wheel must travel farther than the inner one. While differential pinions (6) rotate with the differential case, they spin on differential pinion (6) to transmit more rotation to one differential side gear (4) or (7) than to the other. As one differential gear shaft rotates faster, the other rotates slower by the same amount.

(1) Differential Gear Shaft
(2) Spiral Bevel Gear
(3) Spiral Bevel Pinion
(4) Differential Side Gear
(5) Differential Gear Shaft
(6) Differential Pinion
(7) Differential Side Gear

W10199510

[3] DIFFERENTIAL LOCK

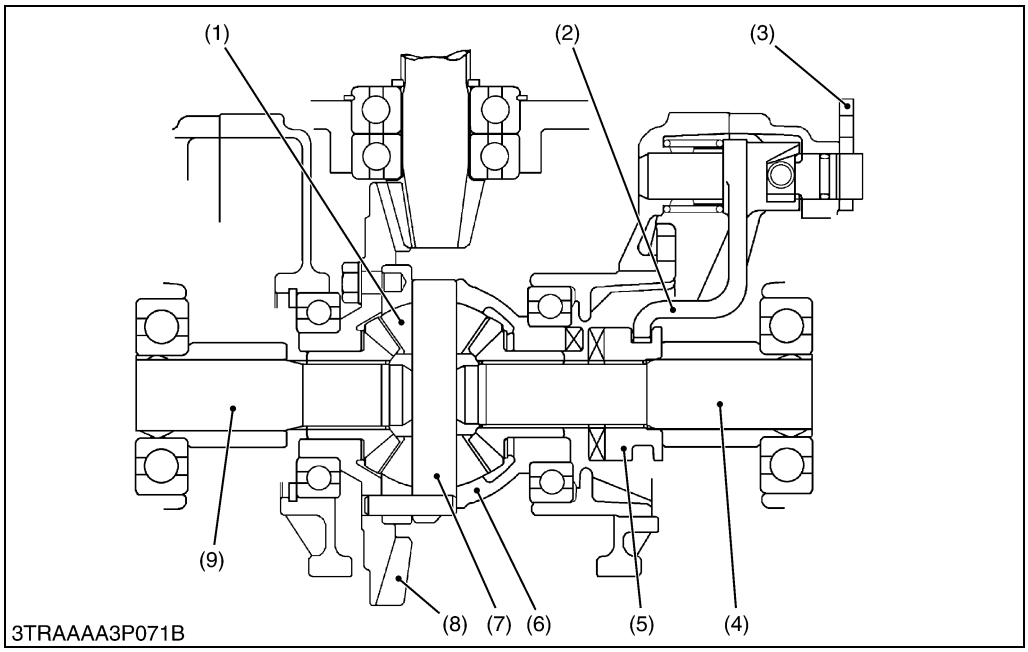

(1) Differential Pinion
(2) Shift Fork
(3) Differential Lock Lever
(4) Differential Gear Shaft
(5) Differential Lock Clutch
(6) Differential Case
(7) Differential Pinion Shaft
(8) Spiral Bevel Gear
(9) Differential Gear Shaft

W10180970

When resistance to the right and left tires are greatly different due to ground conditions or type of work, the tire with less resistance slips and prevents the tractor from moving ahead. To compensate for this drawback, the differential lock restricts the differential action and causes both rear axles to rotate as a unit.

When the differential lock pedal is stepped on, it causes the differential lock lever (3) to rotate, which will move the shift fork (2) and the differential lock clutch (5) toward the spiral bevel gear (8). The differential lock clutch (5) engaged with the teeth of the differential case (6) to cause the differential case (6) and the differential lock clutch (5) to rotate as a unit.

Therefore, differential pinions (1) are unable to rotate around differential pinion shaft (7) and identical revolutions are transmitted to the right and left differential gear shaft (4), (9).

SERVICING

CONTENTS

1. TROUBLESHOOTING 3-S1
2. SERVICING SPECIFICATIONS 3-S4
3. TIGHTENING TORQUES 3-S6
4. CHECKING AND ADJUSTING 3-S7
5. DISASSEMBLING AND ASSEMBLING 3-S10
   [1] SEPARATING CLUTCH HOUSING 3-S10
   [2] DISASSEMBLING CLUTCH HOUSING 3-S15
   [3] SEPARATING CENTER FRAME AND TRANSMISSION CASE 3-S16
   [4] DISASSEMBLING TRANSMISSION CASE 3-S25
      (1) Manual Transmission Model 3-S25
      (2) HST Model 3-S29
   [5] DISASSEMBLING DIFFERENTIAL GEAR CASE 3-S35
6. SERVICING 3-S37
   [1] CLUTCH HOUSING 3-S37
   [2] TRANSMISSION CASE 3-S37
      (1) Manual Transmission Model 3-S37
      (2) HST Model 3-S38
   [3] DIFFEFENTIAL GEAR 3-S42

1. TROUBLESHOOTING

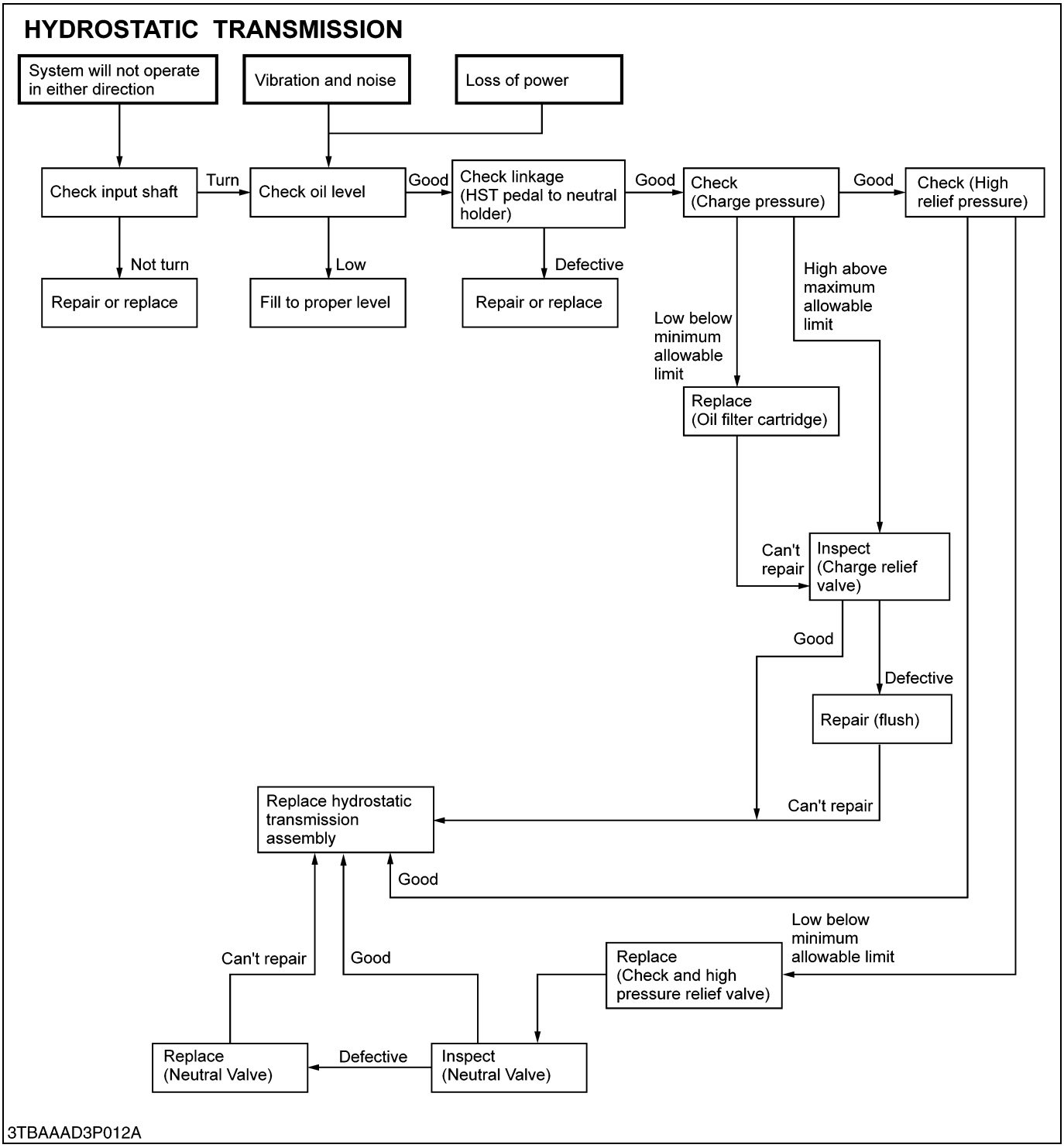

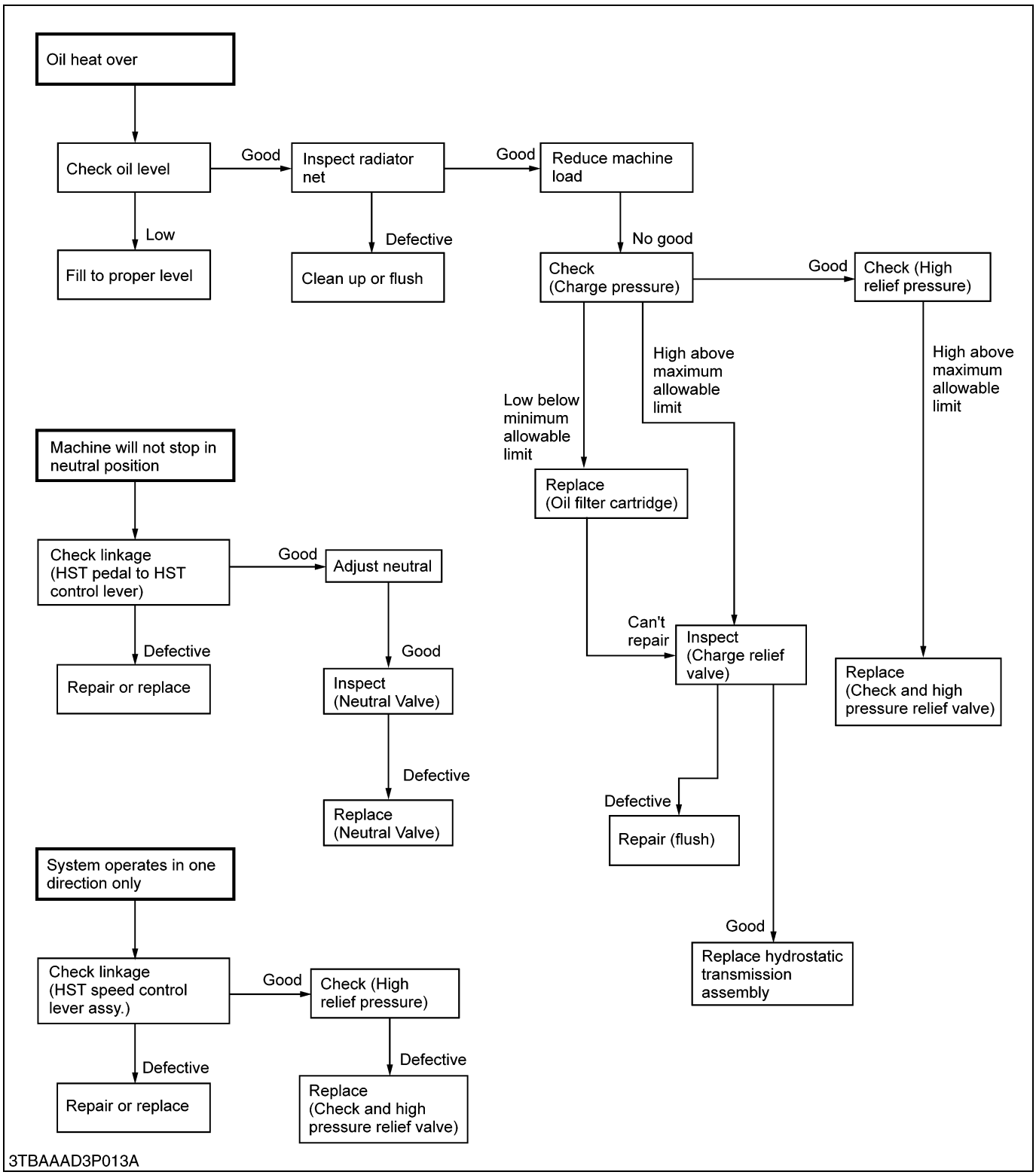
Oil heat over
Check oil level
Good
Inspect radiator net
Good
Reduce machine load
Low
Fill to proper level
Defective
Clean up or flush
No good
Check (Charge pressure)
Good
Check (High relief pressure)
High above maximum allowable limit
High above maximum allowable limit
Low below minimum allowable limit
Replace (Oil filter cartridge)
Machine will not stop in neutral position
Check linkage (HST pedal to HST control lever)
Good
Adjust neutral
Defective
Repair or replace
Good
Inspect (Neutral Valve)
Defective
Replace (Neutral Valve)
Can't repair
Inspect (Charge relief valve)
Replace (Check and high pressure relief valve)
Defective
Repair (flush)
Good
Replace hydrostatic transmission assembly
System operates in one direction only
Check linkage (HST speed control lever assy.)
Good
Check (High relief pressure)
Defective
Repair or replace
Defective
Replace (Check and high pressure relief valve)
3TBAAAD3P013A

CLUTCH HOUSING

Symptom	Probable Cause	Solution	Reference Page
Noise from Clutch Housing	• Transmission oil insufficient • Gear worn or broken • Bearing worn	Refill Replace Replace	3-S10 3-S16 3-S16

W10135800

TRANSMISSION CASE SECTION

Noise from Transmission	• Transmission oil insufficient • Gear worn or broken • Improper backlash between spiral bevel pinon and bevel gear • Improper backlash between differential pinion and differential side gear • Bearings worn	Refill Replace Adjust Adjust Replace	3-S10 – 3-S44 3-S43 –
Gear Slip Out of Mesh	• Shift fork spring tension insufficient • Shift fork or shifter worn • Shift fork bent	Replace Replace Replace	– 3-S27, S33, S34 3-S27, S33

W10137180

DIFFERENTIAL CASE SECTION

Excessive or Unusual Noise at All Time	• Improper backlash between spiral bevel pinion and bevel gear • Improper backlash between differential pinion and differential side gear • Bearing worn • Insufficient or improper type of transmission fluid used	Adjust Adjust Replace Replenish or replace	3-S44 3-S43 – G-8
Noise while Turning	• Differential pinions or differential side gears worn or damaged • Differential lock binding (does not disengage) • Bearing worn	Replace Replace Replace	3-S36 3-S26, S30, 4-S8 –
Differential Lock Can Not Be Set	• Differential lock shift fork damaged • Differential lock shifter mounting pin damaged • Differential lock clutch damaged	Replace Replace Replace	4-S8 4-S8 4-S8
Differential Lock Pedal Does Not Return	• Differential lock pedal return spring weaken or damaged • Differential lock fork shaft rusted	Replace Repair	4-S8 4-S8

W10137180

2. SERVICING SPECIFICATIONS

Item		Factory Specification	Allowable Limit
Check and High Pressure Relief Valve	Setting Pressure [Relief Valve]	31.5 to 32.5 MPa 321 to 331 kgf/cm^2 4568 to 4712 psi	–
Charge Relief Valve	Setting Pressure	350 to 450 kPa 3.6 to 4.6 kgf/cm^2 50.8 to 65.3 psi	–
Shift Fork to Shift Gear Groove	Clearance	0.10 to 0.35 mm 0.004 to 0.014 in.	0.5 mm 0.020 in.
13T Gear to 3rd Shaft	Clearance	0.007 to 0.046 mm 0.00028 to 0.00181 in.	0.1 mm 0.004 in.
3rd Shaft	O.D.	21.987 to 22.000 mm 0.86562 to 0.86614 in.	–
13T Gear	I.D.	30.007 to 30.021 mm 1.18138 to 1.18193 in.	–
Needle	O.D.	3.994 to 4.000 mm 0.15724 to 0.15748 in.	–
16T-20T Gear to Front Wheel Drive Shaft	Clearance	0.027 to 0.067 mm 0.00106 to 0.00264 in.	0.1 mm 0.004 in.
Front Wheel Drive Shaft	O.D.	21.967 to 21.980 mm 0.86484 to 0.86535 in.	–
16T-20T Gear	I.D.	28.007 to 28.021 mm 1.10264 to 1.10319 in.	–
Needle	O.D.	2.996 to 3.000 mm 0.11795 to 0.11811 in.	–
11T Gear, One-way Clutch Cam to Mid-PTO Shaft	Clearance	0.020 to 0.026 mm 0.00078 to 0.00102 in.	0.1 mm 0.004 in.
Mid-PTO Shaft	O.D.	19.989 to 20.000 mm 0.78697 to 0.78740 in.	–
11T Gear and One-way Clutch Cam	I.D.	24.007 to 24.020 mm 0.94516 to 0.94567 in.	–
Needle	O.D.	1.997 to 2.000 mm 0.07862 to 0.07874 in.	–
Spiral Bevel Pinion	Side Clearance	Less than 0.15 mm Less than 0.0059 in.	–
Spiral Bevel Pinion to Spiral Bevel Gear	Backlash	0.10 to 0.20 mm 0.0039 to 0.0079 in.	–
Adjusting Shim	Thickness	0.2 mm, 0.008 in. 0.5 mm, 0.020 in.	–

W10138740

Item		Factory Specification	Allowable Limit
Differential Pinion to Differential Side Gear	Backlash	0.1 to 0.3 mm 0.004 to 0.012 in.	0.4 mm 0.016 in.
Adjusting Shim	Thickness	0.8 mm, 0.0315 in. 1.0 mm, 0.0394 in. 1.2 mm, 0.0472 in.	–
Differential Case to Differential Side Gear	Clearance	0.025 to 0.066 mm 0.00098 to 0.00260 in.	0.3 mm 0.012 in.
Differential Case	I.D.	32.000 to 32.025 mm 1.25984 to 1.26082 in.	–
Spiral Bevel Gear	I.D.	32.000 to 32.025 mm 1.25984 to 1.26082 in.	–
Differential Side Gear	O.D.	31.959 to 31.975 mm 1.25823 to 1.25886 in.	–
Differential Pinion Shaft to Differential Pinion	Clearance	0.016 to 0.045 mm 0.00063 to 0.00177 in.	0.3 mm 0.012 in.
Differential Pinion Shaft	O.D.	15.973 to 15.984 mm 0.62886 to 0.62929 in.	–
Differential Pinion	I.D.	16.000 to 16.018 mm 0.62992 to 0.63063 in.	–
Piston to Bore (HST)	Clearance	0.02 mm 0.0008 in.	0.04 mm 0.0016 in.
Piston Slipper (HST)	Thickness	3.00 mm 0.118 in.	2.90 mm 0.1142 in.
Bi-speed Turn Cable Outer (Clutch Housing Side)	Distance **A** [B2110, B2410]	18 mm 0.71 in.	–
	[B2710]	16 mm 0.63 in.	–
Bi-speed Turn Cable Inner (Front Axle Case Side)	Distance **B** [B2110, B2410]	10 mm 0.39 in.	–
	[B2710]	8 mm 0.31 in.	–

W10138740

3. TIGHTENING TORQUES

Tightening torques of screws, bolts and nuts on the table below are especially specified.
(For general use screws, bolts and nuts : See page G-9.)

Item	N·m	kgf·m	ft-lbs
Steering wheel mounting nut	29.4 to 49.0	3.0 to 5.0	21.7 to 36.2
Delivery pipe nut for HST	34.0 to 39.0	3.5 to 4.0	25.3 to 28.9
Oil cooler pipe nut	50.0 to 57.9	5.1 to 5.9	36.9 to 42.8
Drag link slotted nut	17.7 to 34.5	1.8 to 3.5	13.0 to 25.3
Delivery pipe nut for power steering	64.7 to 75.5	6.6 to 7.7	47.9 to 55.3
Power steering assembly mounting screw	77.5 to 90.1	7.9 to 9.2	57.2 to 66.5
Clutch housing and engine mounting screw	17.7 to 20.6	1.8 to 2.1	13.0 to 15.2
Clutch housing and engine mounting nut	48.1 to 55.8	4.9 to 5.7	35.5 to 41.2
Clutch housing mounting screw and nut	62.8 to 72.6	6.4 to 7.4	46.3 to 53.5
Clutch housing rear cover mounting screw	17.7 to 20.6	1.8 to 2.1	13.0 to 15.2
ROPS connecting plate mounting bolt and nut	47.1 to 56.9	4.8 to 5.8	34.7 to 42.0
ROPS frame mounting screw	77.5 to 90.1	7.9 to 9.2	57.2 to 66.5
3-point hitch shaft setting screw	14.7 to 19.6	1.5 to 2.0	10.8 to 14.5
3-point hitch shaft setting screw lock nut	43.0 to 47.0	4.4 to 4.8	31.7 to 35.4
Rear wheel cotter setting bolt and nut (B1710, B2110, B2410)	123 to 147	12.6 to 15.0	91.1 to 108.5
Rear wheel hub mounting nut (B1710, B2110, B2410)	108 to 125	11.0 to 12.8	79.6 to 92.6
Rear wheel mounting screw and nut (B2710)	108 to 125	11.0 to 12.8	79.6 to 92.6
Speed control rod screw	39.2 to 44.1	4.0 to 4.5	28.9 to 32.5
Delivery pipe joint bolt	34.0 to 39.0	3.5 to 4.0	25.1 to 28.7
Connecting plate mounting screw and nut	39.2 to 44.1	4.0 to 4.5	28.9 to 32.5
Top link bracket mounting screw	77.5 to 90.1	7.9 to 9.2	57.2 to 66.5
Hydraulic cylinder mounting screw	39.2 to 44.1	4.0 to 4.5	28.9 to 32.5
Main shift cover mounting screw	17.7 to 20.6	1.8 to 2.1	13.0 to 15.2
Drawbar frame mounting screw	62.8 to 72.5	6.4 to 7.4	46.3 to 53.5
Mid-PTO case mounting screw	39.2 to 44.1	4.0 to 4.5	28.9 to 32.5
Transmission case mounting screw and nut	39.2 to 44.1	4.0 to 4.5	28.9 to 32.5
Rear axle case mounting screw	39.2 to 44.1	4.0 to 4.5	28.9 to 32.5
Front case mounting screw	39.2 to 44.1	4.0 to 4.5	28.9 to 32.5
Mid-PTO rear cover mounting screw	17.7 to 20.6	1.8 to 2.1	13.0 to 15.2
Spring holder mounting screw	39.2 to 44.1	4.0 to 4.5	28.9 to 32.5
Neutral adjuster lock screw	17.7 to 20.6	1.8 to 2.1	13.0 to 15.2
Neutral holder mounting screw	23.6 to 27.4	2.4 to 2.8	17.4 to 20.2
Charge pump mounting screw	17.7 to 20.6	1.8 to 2.1	13.0 to 15.2
Center section mounting hex. head screw	48.1 to 55.8	4.9 to 5.7	35.5 to 41.2
Bearing holder mounting screw	50.0 to 54.9	5.1 to 5.6	36.9 to 40.1
PTO cover mounting screw	39.2 to 44.1	4.0 to 4.5	28.9 to 32.5
Differential gears bearing holder mounting screw	17.7 to 20.6	1.8 to 2.1	13.0 to 15.2
Spiral bevel gear UBS screw	29.4 to 34.3	3.0 to 3.5	21.7 to 25.3
Check and high pressure relief valve plug	118 to 147	12.0 to 15.0	86.8 to 108.5
Neutral valve cap screw	58.5 to 68.6	6.0 to 7.0	43.4 to 50.6

W10127360

4. CHECKING AND ADJUSTING

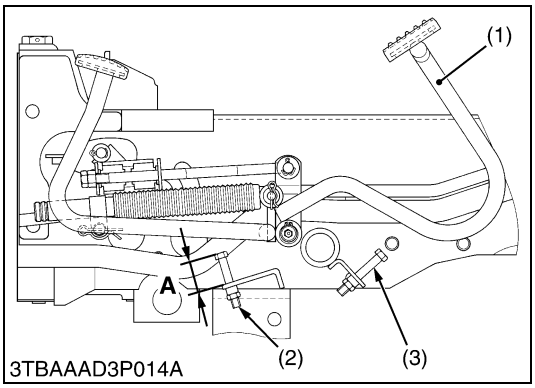

Adjusting Maximum Speed

[Forward Adjustment]

1. Shorten the stopper bolt front (3) to the position where the length of the bolt is not touched to the HST pedal (1) even if the HST pedal is fully depressed forward.
2. Lengthen the length of the stopper bolt front (3) gradually with the HST pedal fully depressed and lengthen the one turn from the position where the head of the stopper bolt touches the HST pedal.
3. Tighten the lock nut.

[Reverse Adjustment]

1. Adjust the length **A** of stopper bolt rear (2) to 27 to 28 mm (1.06 to 1.10 in.).

(Reference)

Maximum speed with turf tire (at 2600 rpm)	Forward	B2110 B2410	21.1 to 22.1 km/h 13.2 to 13.8 mph
		B2710	23.5 to 24.5 km/h 14.7 to 15.3 mph
	Reverse	B2110 B2410	16.8 to 17.8 km/h 10.5 to 11.1 mph
		B2710	18.7 to 19.7 km/h 11.7 to 12.3 mph

(1) Speed Control Pedal (HST Pedal) (3) Stopper Bolt Front
(2) Stopper Bolt Rear

W10120240

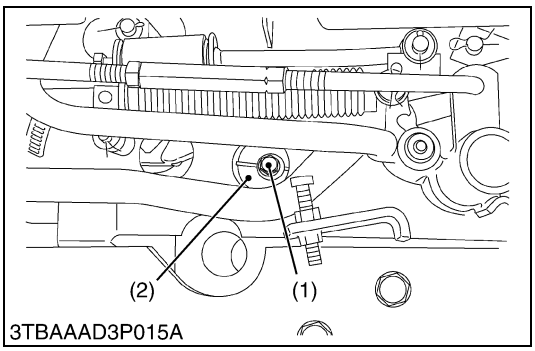

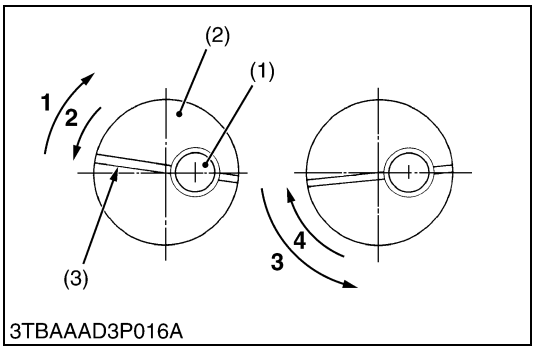

Adjusting Neutral

1. Disengage the front wheel drive lever. (Drive only rear wheels.)
2. Lift the rear of the tractor so that the rear wheels are off the ground and run the engine at low idling and drive only rear wheels.
3. Slightly loosen the neutral adjuster setting screw (1).
4. Rotate the neutral adjuster (2) clockwise so that rear wheels turn reverse.
5. Then rotate it counterclockwise until wheels stop completely.
6. Put a mark on the center frame aligning the groove (3) on neutral adjuster.
7. Rotate the neutral adjuster (2) counterclockwise so the rear wheels turn forward.
8. Then rotate it clockwise until wheels stop completely.
9. Put a mark on the center frame aligning the groove (3) on neutral adjuster.
10. Hold the neutral adjuster so its groove is at the middle of the marks and tighten the setting screw (1).

■ **NOTE**

- **When the wheels tend to turn forward, rotate neutral adjuster clockwise.**
- **When the wheels tend to turn reverse, rotate neutral adjuster counterclockwise.**

(1) Neutral Adjuster Setting Screw (3) Groove
(2) Neutral Adjuster

W10122970

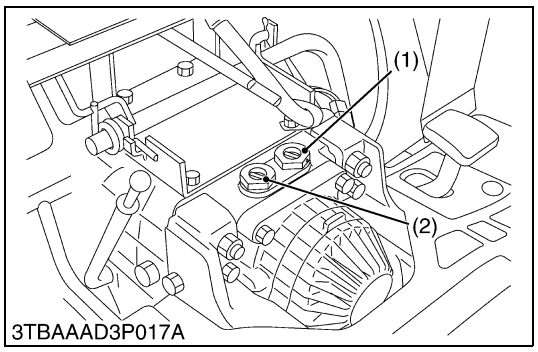

3TBAAAD3P017A

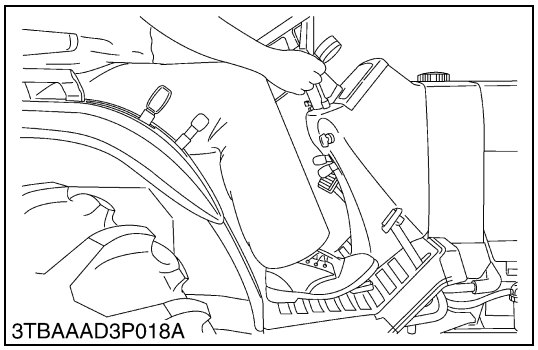
3TBAAAD3P018A

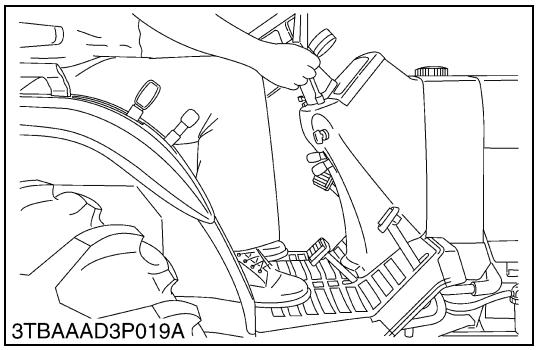
3TBAAAD3P019A

Charge Relief Pressure and High Relief Pressure

CAUTION

- **When checking, park the tractor on flat ground and fully engage the parking brake.**

1. Remove the lowering speed adjusting knob and dipstick, then remove the seat under cover.
2. Assemble the HST adaptor **A** and threaded joint with O-ring and back up ring (Refer to G-38).

■ Charge Relief Pressure

1. Remove the neutral valve assembly one side (forward (1) or reverse (2)) then install the assembled HST adaptor **A** to its neutral valve port.
2. Install the cable and low pressure gauge to HST adaptor **A**.
3. Change the range gear shift lever to **Low** position.
4. Start the engine and run it at the maximum speed.
5. Read the low pressure gauge to measure the charge relief pressure.
6. If the measurement is not same as factory specification, check the charge relief valve and related hydraulic components.

■ High Relief Pressure

1. Remove the neutral valve assembly forward (1), then install the assembled HST adaptor **A** to its neutral valve port.
2. Install the cable and high pressure gauge to HST adaptor **A**.
3. Change the range gear shift lever to **High** position.
4. Start the engine and run it at the maximum speed.
5. Depress the speed control pedal forward and read the high pressure gauge to measure the forward high relief pressure.
6. Stop the engine and change the installation of HST adaptor **A** and pressure gauge from forward neutral valve port to reverse.
7. Start engine and repeat above method (4. and 5.) to measure the reverser high relief pressure.
8. If the measurement is not same as factory specification, check the high pressure relief valve and related hydraulic components.

Charge relief pressure	Factory spec. (Oil temperature at 50 °C, 122 °F)	350 to 450 kPa 3.6 to 4.6 kgf/cm^2 50.8 to 65.3 psi
High relief pressure	Factory spec. (Oil temperature at 50 °C, 122 °F)	31.5 to 32.5 MPa 321 to 331 kgf/cm^2 4568 to 4712 psi

Tightening torque	Neutral valve cap screw	58.8 to 68.6 N·m 6.0 to 7.0 kgf·m 43.4 to 50.6 ft-lbs

■ IMPORTANT

- **Measure quickly so that the high pressure relief valve may not be in operation more than 10 seconds.**

■ NOTE

- **High pressure gauge is 40 MPa (400 kgf/cm^2, 5800 psi) full scale.**
- **Low pressure gauge is 2 MPa (20 kgf/cm^2, 290 psi) full scale.**
- **When reinstall the neutral valve, take care not to damage the O-ring.**

(1) Neutral Valve (Forward) (2) Neutral Valve (Reverse)

W10125250

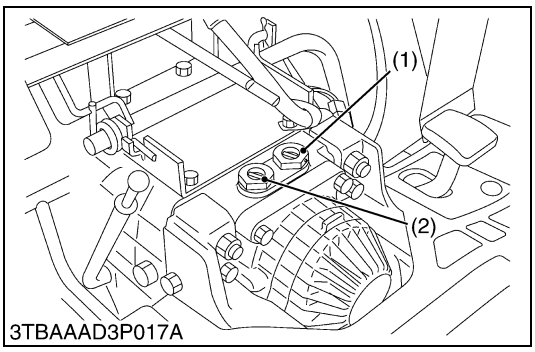

Neutral Valve Actuation Test

WARNING

- **To avoid personal injury, do not operate if tractor moves on level ground with foot off speed control pedal.**

(Checking Procedure)

CAUTION

- **When checking, park the tractor on flat ground, apply the parking brake.**

1. Disengage the front wheel drive lever.
2. Disconnect the brake rod, one side.
3. Lift the rear of tractor, one side.
4. Set the engine speed to 1500 rpm.
5. Shift the range gear shift lever to **Hi** position.
6. Move the HST pedal from the forward to the neutral position make sure that the tire comes to stop. Check the same way for the movement from rearward to the neutral position.
   In this time, make sure that the neutral range of HST.
7. If the tire fail to stop or neutral range is point, check the each neutral valve.

(1) Neutral Valve (Forward) (2) Neutral Valve (Reverse)

W10133030

5. DISASSEMBLING AND ASSEMBLING

[1] SEPARATING CLUTCH HOUSING

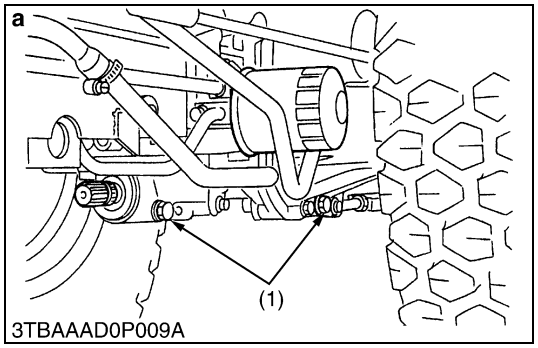

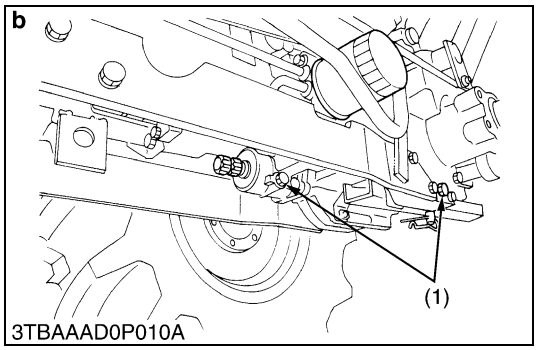

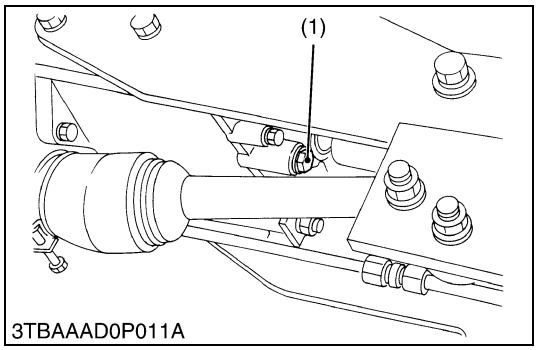

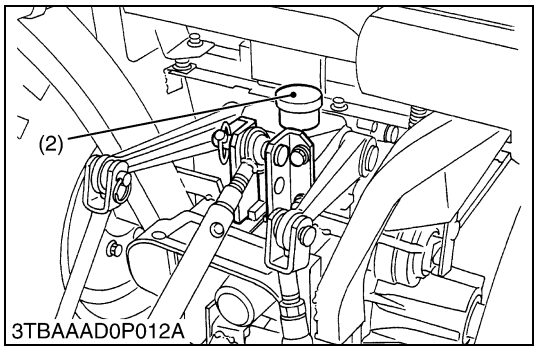

Draining Transmission Fluid

1. Place oil pan underneath the transmission case, and remove the drain plugs (1).
2. Drain the transmission fluid.
3. Reinstall the drain plug (1).

(When refilling)

- Fill new oil from filling port after removing the filling plug (2) up to the upper notch on the dipstick (3).
- After running the engine for few minutes, stop it and check the oil level again, if low, add oil prescribed level.

■ **IMPORTANT**

- **Use only KUBOTA UDT fluid-Use of other oils may damage the transmission or hydraulic system.**
  Refer to "LUBRICANTS, FUEL AND COOLANT". (See page G-8.)
- **Never work the tractor immediately after changing the transmission oil. Keeping the engine at medium speed for a few minutes to prevents damage to the transmission.**
- **Do not mix different brands oil together.**

Transmission fluid capacity	B1710D B2110D B2110DB B2410D B2410DB	11.5 L 3.04 U.S.gals. 2.53 Imp.gals.
	B2110HDB B2410HDB	12.5 L 3.30 U.S.gals. 2.75 Imp.gals.
	B2710HDB	15.5 L 4.10 U.S.gals. 3.41 Imp.gals.

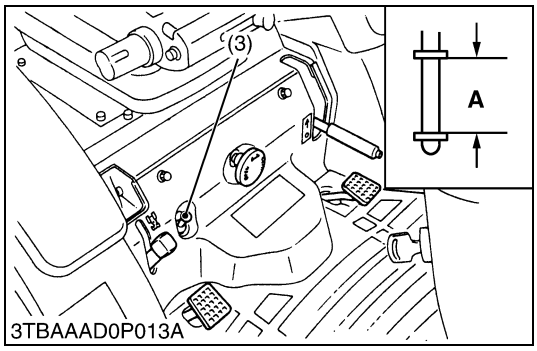

(1) Drain Plug
(2) Filling Port
(3) Dipstick

A : Oil level is acceptable within this range.
a : B1710, B2110, B2410
b : B2710

W10152230

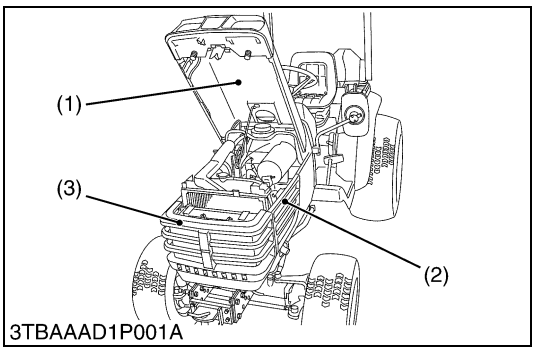

Hood, Side Cover and Front Grille

1. Open the hood (1) and remove the front grille (3).
2. Disconnect the head light connectors and remove the hood and side covers (2).

(1) Hood
(2) Side Cover
(3) Front Grille

W10156940

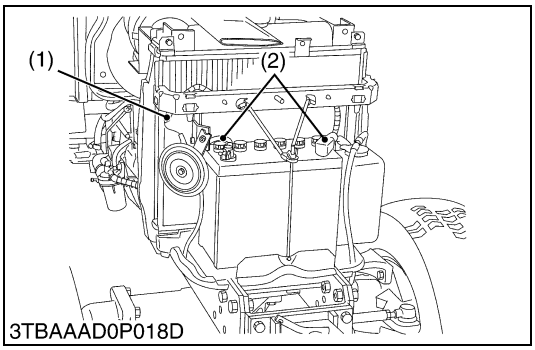

Battery and Horn

1. Disconnect the battery cords (2) and horn connector (1).

■ **NOTE**

- **When disconnecting the battery cords, disconnect the grounding cord first. When connecting, positive cord first.**

(1) Horn Connector
(2) Battery Cord

W10424310

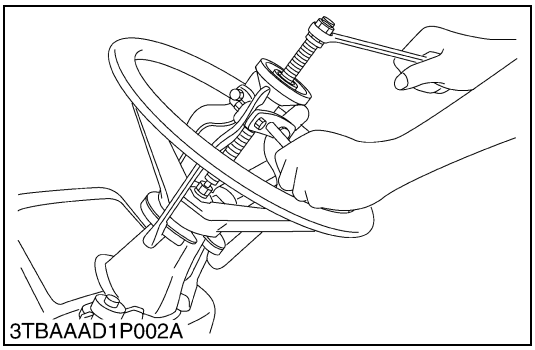

Steering Wheel

1. Remove the steering wheel cap.
2. Remove the steering wheel mounting nut and remove the steering wheel with a steering wheel puller (Code No. 07916-51090).

(When reassembling)

Tightening torque	Steering wheel mounting nut	29.4 to 49.0 N·m 3.0 to 5.0 kgf·m 21.7 to 36.2 ft-lbs

W10158450

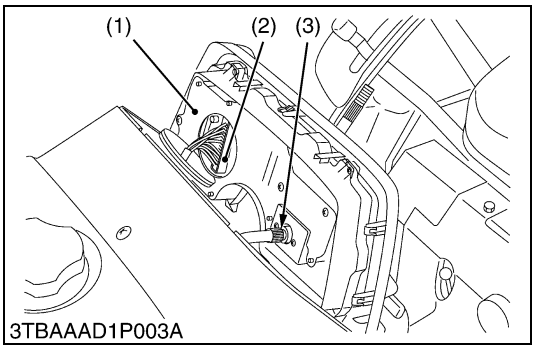

Meter Panel and Panel Under Cover

1. Open the meter panel (1) and disconnect the meter panel connector (2) and hour-meter cable (3). Then remove the meter panel.
2. Disconnect the combination switch connector (8), main switch connector (4), hazard switch connector (6) and position light switch connector (7).
3. Tap out the spring pin and remove the hand accelerator lever (5).
4. Remove the panel under cover (9).

(1) Meter Panel
(2) Meter Panel Connector
(3) Hour-meter Cable
(4) Main Switch Connector
(5) Hand Accelerator Lever
(6) Hazard Switch Connector
(7) Position Light Switch Connector
(8) Combination Switch Connector
(9) Panel Under Cover

W10334030

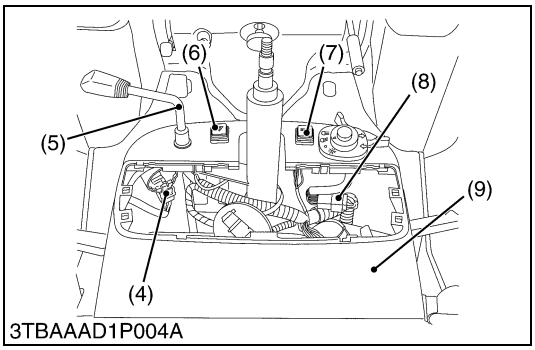

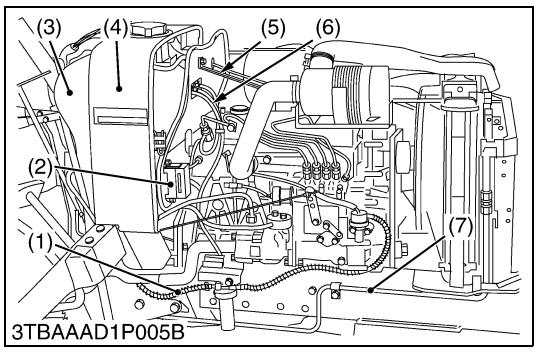

3TBAAAD1P005B

Fuel Tank

1. Disconnect the fuel hose (1) at the fuel filter side, then drain fuel completely.
2. Remove the fuel tank frame stay (5).
3. Disconnect the flasher unit and starter relay connectors and remove the lead wire for fuel gauge.
4. Remove the fuse box (2).
5. Disconnect the overflow hoses (6) of fuel line.
6. Remove the tank frame (4) with fuel tank (3).
7. Disconnect the hydraulic pipes (7) (HST Model).

(When reassembling)

■ **NOTE**

- **For fastening hydraulic pipe nut, use two wrenches. Hold the fitting with a wrench, turn the pipe nut with another wrench to avoid damage at fitting installed part.**

Tightening torque	Delivery pipe nut for HST	34 to 39 N·m 3.5 to 4.0 kgf·m 25.3 to 28.9 ft-lbs
	Oil cooler pipe nut	50 to 58 N·m 5.1 to 5.9 kgf·m 36.9 to 42.8 ft-lbs

(1) Fuel Hose
(2) Fuse Box
(3) Fuel Tank
(4) Fuel Tank Frame
(5) Fuel Tank Frame Stay
(6) Overflow Hose
(7) Oil Cooler Pipe IN (HST Model)

W10337450

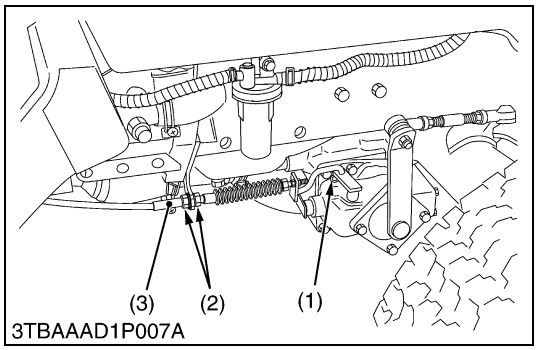

3TBAAAD1P007A

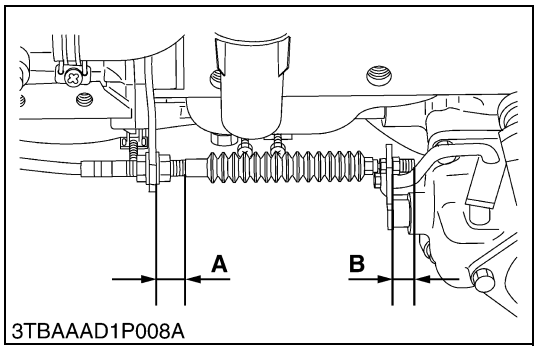

3TBAAAD1P008A

Bi-speed Turn Cable (Bi-speed Model)

1. Remove the spring lock pin (1) and loosen the lock nuts (2) and then remove the bi-speed turn cable (3).

(When reassembling)

- When reassembling the bi-speed turn cable (3), make sure the distance **A**.

Distance **A**	Factory spec.	B2110 B2410	18 mm 0.71 in.
		B2710	16 mm 0.63 in.

(Reference)

Distance **B**	Factory spec.	B2110 B2410	10 mm 0.39 in.
		B2710	8 mm 0.31 in.

(1) Spring Lock Pin
(2) Lock Nut
(3) Bi-speed Turn Cable

W10165020

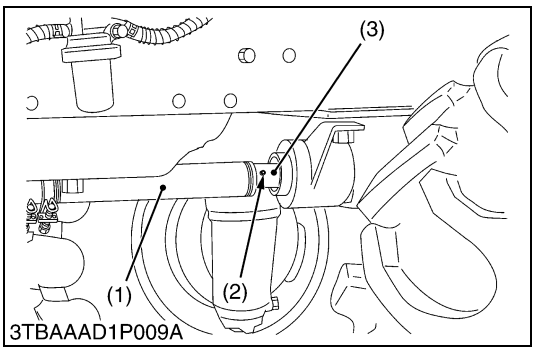

Propeller Shaft Cover and Coupling

1. Loosen the clamp and slide the propeller shaft cover (1) to the rear.
2. Tap out the spring pin (2) and then slide the coupling (3) to the rear.

(When reassembling)

- Apply grease to the splines of the propeller shaft and coupling.

(1) Propeller Shaft Cover
(2) Spring Pin
(3) Coupling

W10167000

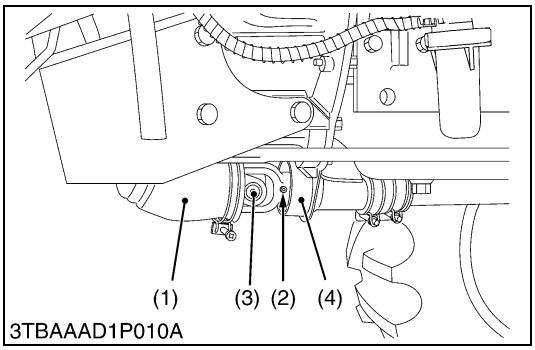

Universal Joint and Bearing Holder

1. Loosen the clamp and slide the universal joint cover (1) to the rear.
2. Tap out the spring pins (2) and then slide the universal joint (3) to the rear.
3. Remove the bearing holder (4) with propeller shaft and universal joint.

(When reassembling)

- Apply grease to the splines of the propeller shaft and universal joint.
- When inserting the spring pins (2), face their splits in the direction parallel to the universal joint as shown in the figure.

(1) Universal Joint Cover
(2) Spring Pin
(3) Universal Joint
(4) Bearing Holder

W10169120

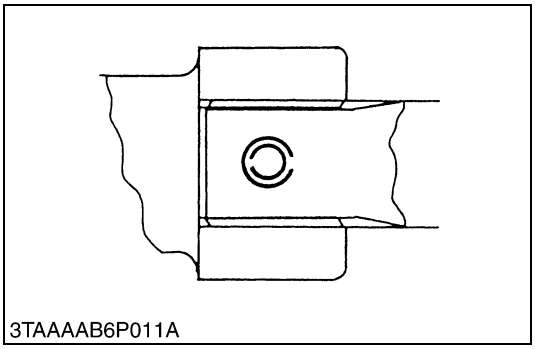

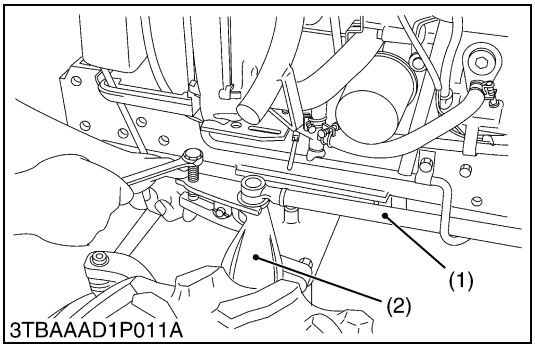

Drag Link

1. Remove the cotter pin and loosen the slotted nut.
2. Disconnect the drag link (1) with a tie-rod end lifter from the knuckle arm (2).

(When reassembling)

■ **IMPORTANT**

- **Do not loosen the slotted nut to align the hole.**
- **Install the cotter pin as shown in the figure.**

(Reference)

Tightening torque	Slotted nut	17.7 to 34.5 N·m 1.8 to 3.5 kgf·m 13.0 to 25.3 ft-lbs

(1) Drag Link
(2) Knuckle Arm

W10344330

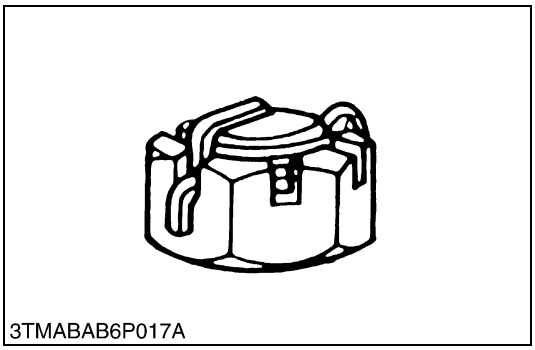

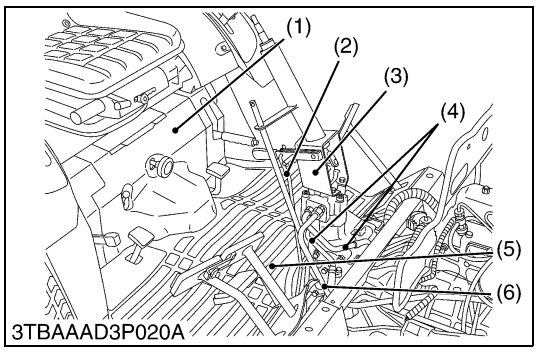

Power Steering Assembly

1. Remove the seat under cover (1) and rubber mat (5).
2. Remove the clutch spring (except B2710) and remove the left hand side step.
3. Remove the power steering delivery pipe (6) and return pipe (4).
4. Disconnect the speed set rod (2). (HST Model)
5. Remove the power steering assembly (3) from the center frame.

(When reassembling)

■ **NOTE**

- **For fastening hydraulic pipe nut, use two wrenches. Hold the fitting with a wrench, turn the pipe nut with another wrench to avoid damage at fitting installed part.**

Tightening torque	Delivery pipe nut for power steering	64.7 to 75.5 N·m 6.6 to 7.7 kgf·m 47.9 to 55.3 ft-lbs
	Power steering assembly mounting screw	77.5 to 90.1 N·m 7.9 to 9.2 kgf·m 57.2 to 66.5 ft-lbs

(1) Seat Under Cover
(2) Speed Set Rod
(3) Power Steering Assembly
(4) Power Steering Return Pipe
(5) Rubber Mat
(6) Power Steering Delivery Pipe

W10136970

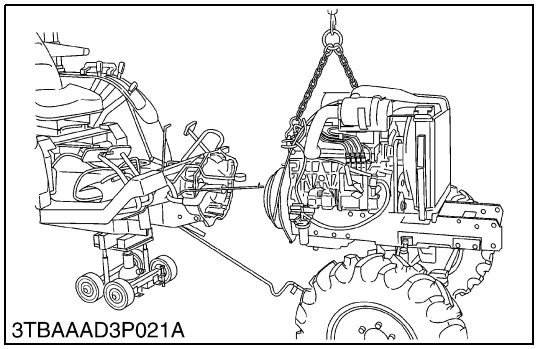

Separating the Engine from Clutch Housing

1. Disconnect the three point hitch delivery pipe and suction hose.
2. Disconnect the glow plug lead wire and thermo sensor lead wire. And then disconnect the connectors for alternator and starter motor lead wire.
3. Disconnect the accelerator rod.
4. Place the jack under the center frame.
5. Hoist the engine by the chain at the engine hook.
6. Remove the engine mounting screws and separate the engine from the clutch housing.

(When reassembling)

- Apply liquid gasket (Three Bond 1208D or equivalent) to joint face of the engine and clutch housing.

Tightening torque	Engine mounting screw	17.7 to 20.6 N·m 1.8 to 2.1 kgf·m 13.0 to 15.2 ft-lbs
	Engine mounting nut	48.1 to 55.8 N·m 4.9 to 5.7 kgf·m 35.5 to 41.2 ft-lbs

W10139230

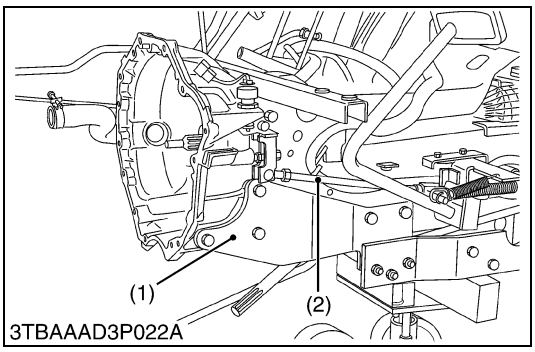

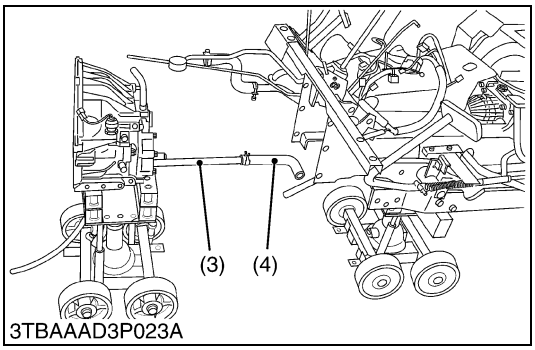

Separating Clutch Housing

1. Remove the bracket (1). (B2710 only)
2. Remove the clutch pedal rod (2).
3. Loosen the clamp and disconnect the connecting hose (3). (HST Model)
4. Separate the clutch housing from center frame.
5. Remove the hydraulic pipe (4).

(When reassembling)

- Apply grease to the splines of propeller shaft and ball joint.

Tightening torque	Clutch housing mounting screw and nut	62.8 to 72.6 N·m 6.4 to 7.4 kgf·m 46.3 to 53.5 ft-lbs

(1) Bracket
(2) Clutch Pedal Rod
(3) Connecting Hose
(4) Hydraulic Pipe

W10140940

[2] DISASSEMBLING CLUTCH HOUSING

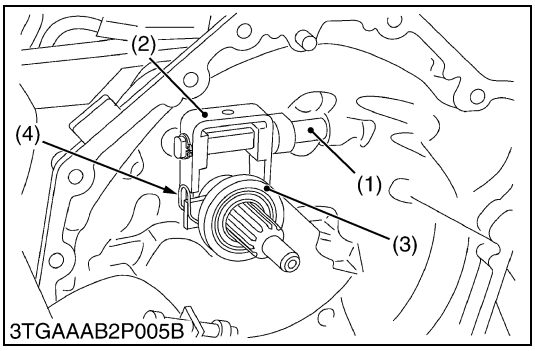

Clutch Rod and Clutch Release Fork

1. Remove the external snap ring at the end of clutch rod.
2. Draw out the clutch rod (1) and remove the clutch release fork (2).
3. Take out the release hub with release bearing (3).

(When reassembling)

- Set the clutch release fork and release hub with set spring (4) in the correct direction.

(1) Clutch Rod
(2) Clutch Release Fork
(3) Release Bearing
(4) Set Spring

W10144100

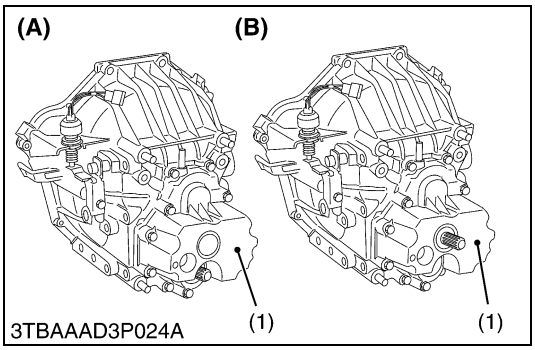

Clutch Housing Rear Cover

1. Remove the clutch housing rear cover (1).

(When reassembling)

- Apply liquid gasket (Three Bond 1208D or equivalent) to joint face of clutch housing and rear cover (1).

Tightening torque	Clutch housing rear cover mounting screw	17.7 to 20.6 N·m 1.8 to 2.1 kgf·m 13.0 to 15.2 ft-lbs

(1) Clutch Housing Rear Cover

(A) HST Model
(B) Manual Transmission Model

W10145420

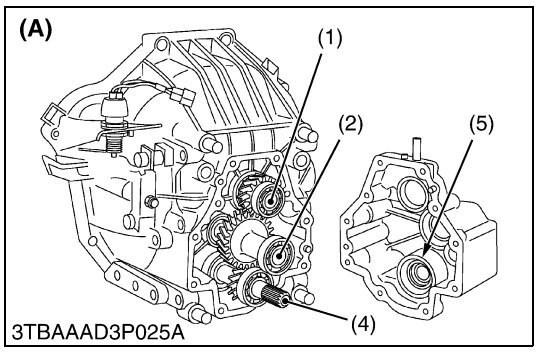

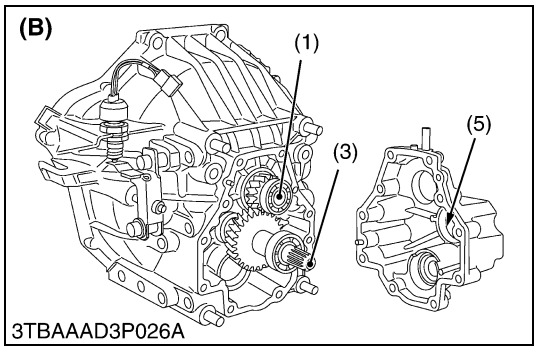

Clutch Shaft and Others

1. Pull out the clutch shaft assembly (1).
2. Pull out the 2nd gear shaft, front assembly (2) (HST Model).
3. Pull out the 2nd shaft, front assembly (3) (Manual Transmission Model).
4. Pull out the 3rd shaft, front assembly (4) (HST Model).

(When reassembling)

- Apply small amount of the grease to the oil seal (5).

(1) Clutch Shaft Assembly
(2) 2nd Gear Shaft, Front Assembly
(3) 2nd Shaft, Front Assembly
(4) 3rd Shaft, Front Assembly
(5) Oil Seal

(A) HST Model
(B) Manual Transmission Model

W10146790

[3] SEPARATING CENTER FRAME AND TRANSMISSION CASE

Draining Transmission Fluid

1. See page 3-S10.

W10149430

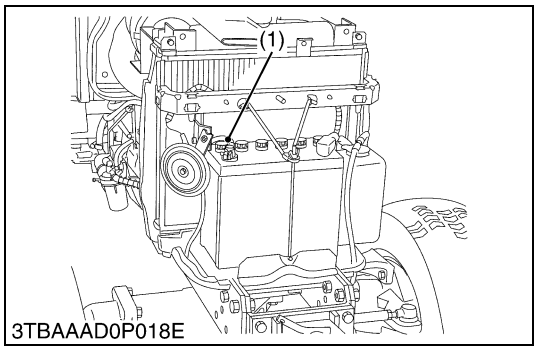

Battery Connector

1. Open the hood and remove the front grille.
2. Disconnect the battery ground cord (1).

■ **NOTE**

- **When disconnecting the battery cords, disconnect the grounding cord first. When connecting, the positive cord first.**

(1) Battery Cord

W10149930

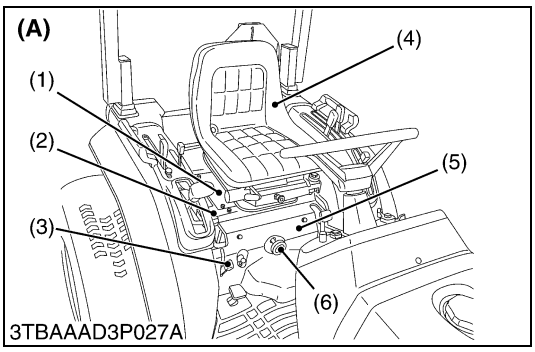

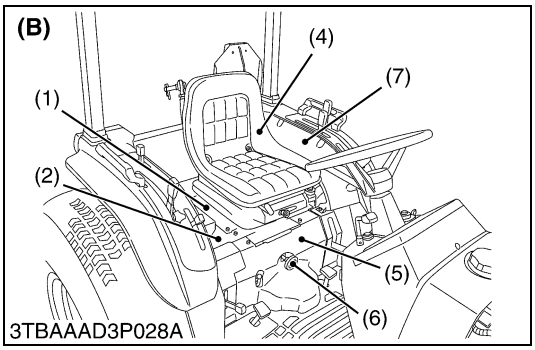

Seat and Seat Under Covers

1. Remove the seat (4) with seat stay (1) as a unit.
2. Remove the lowering speed adjusting knob (6) and front wheel drive lever grip (3) (except B2710) and then remove the seat under cover, front (5).
3. Remove the seat under cover, rear (2).
4. Remove the fender covers (7) (B2710 only).

(1) Seat Stay
(2) Seat Under Cover, Rear
(3) Front Wheel Drive Lever Grip
(4) Seat
(5) Seat Under Cover, Front
(6) Lowering Speed Adjusting Knob
(7) Fender Cover

(A) B1710, B2110, B2410
(B) B2710

W10151290

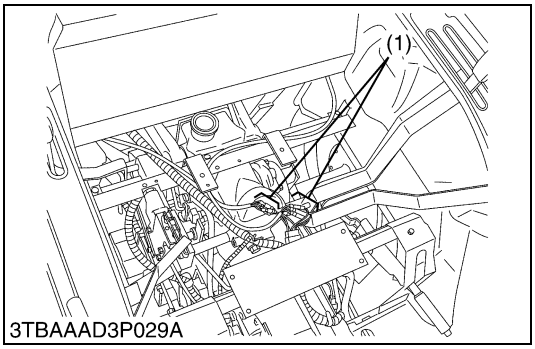

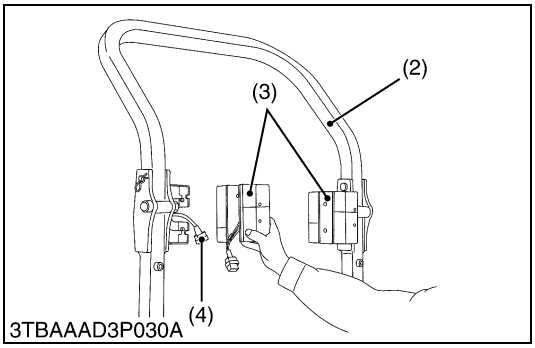

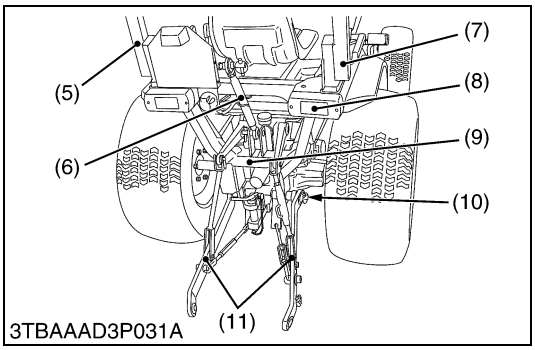

ROPS and 3-Point Linkages

1. Disconnect the connectors (1) of combination light assemblies.
2. Remove the combination light assembly mounting screws and disconnect the couplers (4).
3. Remove the ROPS frame top (2).
4. Remove the top link (6) and remove the lower link (11) and the collar from the 3-point hitch shaft (10).
5. Remove the reflectors (8) with frame.
6. Remove the ROPS to fender mounting screws.
7. Remove the PTO shaft cover (9) and the connecting plate of ROPS.
8. Disconnect the wiring harness of number plate light and trailer coupler.
9. Remove the left and right side of ROPS frame (5), (7).
10. Remove the 3-point hitch shaft (10).

(When reassembling)

Tightening torque	Connecting plate mounting bolt and nut	47.1 to 56.9 N·m 4.8 to 5.8 kgf·m 34.7 to 42.0 ft-lbs
	ROPS frame mounting screw	77.5 to 90.1 N·m 7.9 to 9.2 kgf·m 57.2 to 66.5 ft-lbs
	3-point hitch shaft setting screw	14.7 to 19.6 N·m 1.5 to 2.0 kgf·m 10.8 to 14.5 ft-lbs
	3-point hitch shaft setting screw lock nut	43.0 to 47.0 N·m 4.4 to 4.8 kgf·m 31.7 to 35.4 ft-lbs

(1) Connectors for Combination Light
(2) ROPS Frame, Top
(3) Combination Light Assembly
(4) Coupler
(5) ROPS Frame, LH
(6) Top Link
(7) ROPS Frame, RH
(8) Reflector
(9) PTO Shaft Cover
(10) 3-Point Hitch Shaft
(11) Lower Link Assembly

W10153490

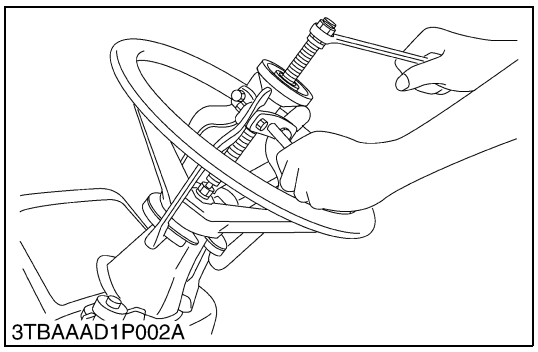
3TBAAAD1P002A

Steering Wheel

1. Remove the steering wheel cap.
2. Remove the steering wheel mounting nut and remove the steering wheel with a steering wheel puller (Code No. 07916-51090).

(When reassembling)

Tightening torque	Steering wheel mounting nut	29.4 to 49.0 N·m 3.0 to 5.0 kgf·m 21.7 to 36.2 ft-lbs

0

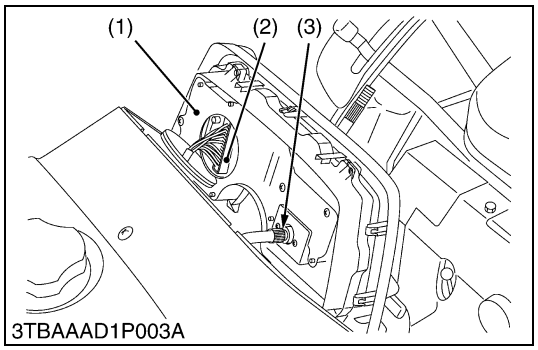

3TBAAAD1P003A

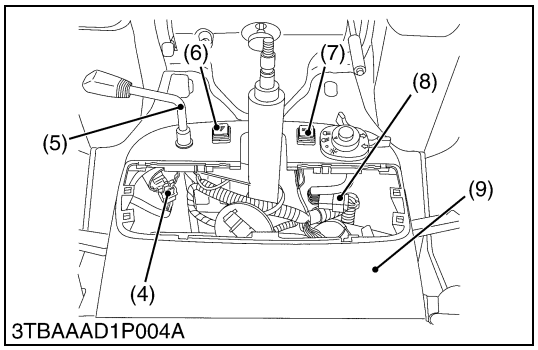

3TBAAAD1P004A

Meter Panel and Panel Under Cover

1. Open the meter panel (1) and disconnect the meter panel connector (2) and hour-meter cable (3). Then remove the meter panel.
2. Disconnect the combination switch connector (8), main switch connector (4), hazard switch connector (6) and position light switch connector (7).
3. Tap out the spring pin and remove the hand accelerator lever (5).
4. Remove the panel under cover (9).

(1) Meter Panel
(2) Meter Panel Connector
(3) Hour-meter Cable
(4) Main Switch Connector
(5) Hand Accelerator Lever
(6) Hazard Switch Connector
(7) Position Light Switch Connector
(8) Combination Switch Connector
(9) Panel Under Cover

W10450620

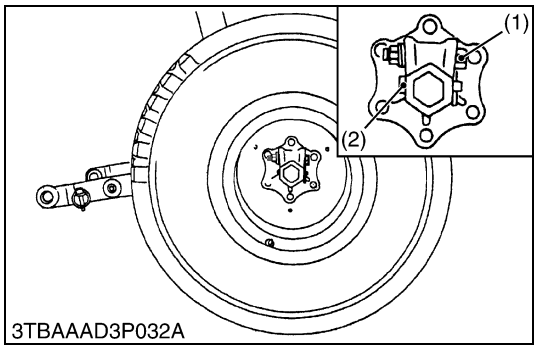

3TBAAAD3P032A

Rear Wheels (B1710, B2110, B2410)

1. Place a jack under the transmission case.
2. Loosen the rear wheel cotter setting bolt and nut (1).
3. Take out the wheel hub pin (2).
4. Take out the rear wheel and support the rear axles by stands.

■ **IMPORTANT**

- **When re-fitting or adjusting a wheel, tighten the bolts to the following torques and then recheck them after driving the tractor approximately 200 m (200 yards).**

(When reassembling)

Tightening torque	Rear wheel cotter setting bolt and nut	123 to 147 N·m 12.6 to 15.0 kgf·m 91.1 to 108.5 ft-lbs
	Rear wheel hub mounting nut	108 to 125 N·m 11.0 to 12.8 kgf·m 79.6 to 92.6 ft-lbs

(1) Cotter Setting Bolt
(2) Wheel Hub Pin

W10158030

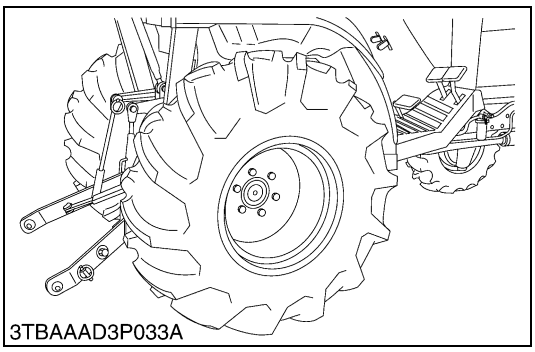
3TBAAAD3P033A

Rear Wheels (B2710)

1. Place hydraulic jack under the main frame rear side and jack up the tractor.
2. Remove the tires.
3. After removing the tires, support the rear axles by stands.

(When reassembling)

Tightening torque	Rear wheel mounting screw and nut	108 to 125 N·m 11.0 to 12.8 kgf·m 79.6 to 92.6 ft-lbs

W10160900

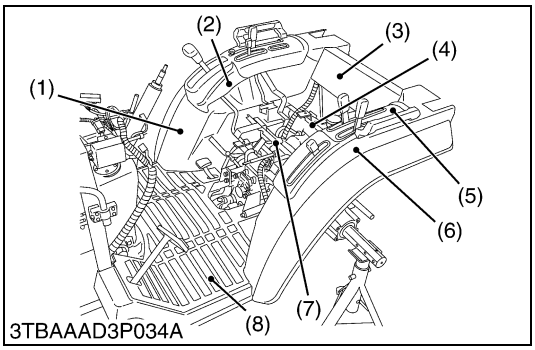

3TBAAAD3P034A

Fender and Steps (B1710, B2110, B2410)

1. Remove the lever grips and remove the lever guides (2), (5).
2. Remove the fenders (1), (6) and fender stay (3).
3. Loosen the lock nuts and disconnect the bi-speed turn cable (12) and remove the bi-speed turn lever springs. (Bi-speed Turn Model)

■ **NOTE**

- **Measure and note the distance A before disconnecting the bi-speed turn cable (12).**

4. Remove the seat stay rear (4) and front (7).
5. Remove the rubber mat (8).
6. Remove the clutch springs and remove the left hand side step.
7. Disconnect the speed set rod (9) and link (10) (HST Model).
8. Remove the brake springs and remove the right hand side step.

(When reassembling)

- Be sure to adjust the position of bi-speed turn cable (See page 4-S5).

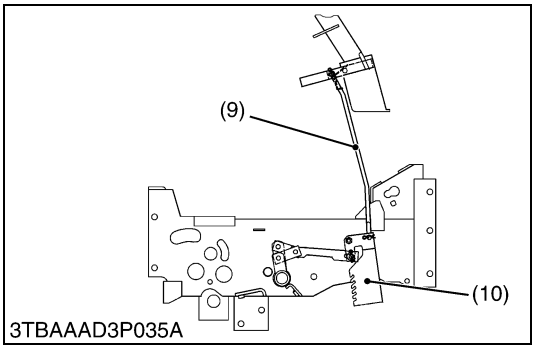

3TBAAAD3P035A

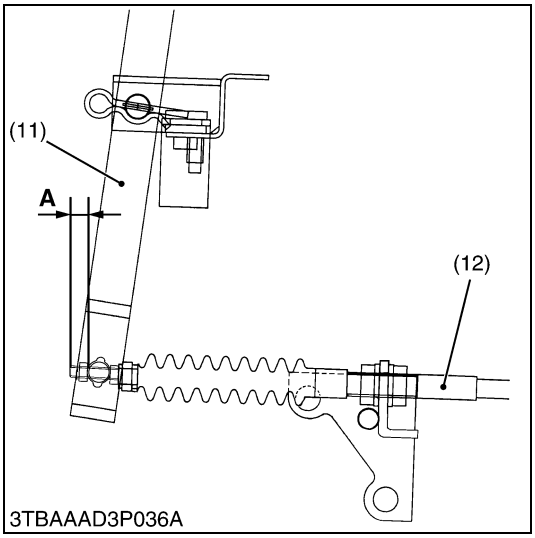

3TBAAAD3P036A

(1) Fender RH
(2) Lever Guide RH
(3) Fender Stay
(4) Seat Stay, Rear
(5) Lever Guide LH
(6) Fender LH
(7) Seat Stay, Front
(8) Rubber Mat
(9) Speed Set Rod
(10) Link
(11) Bi-speed Turn Lever
(12) Bi-speed Turn Cable

W10162220

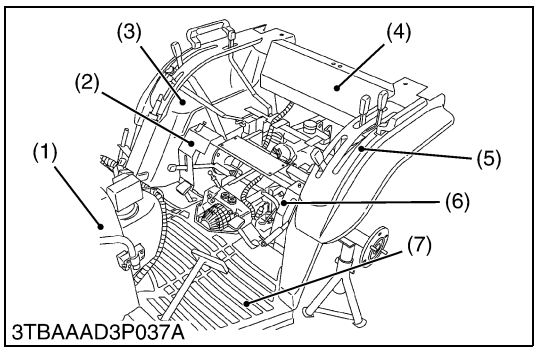

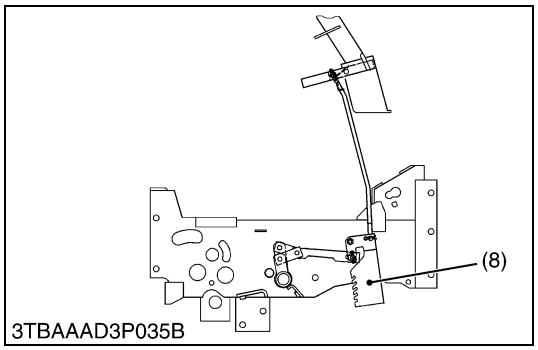

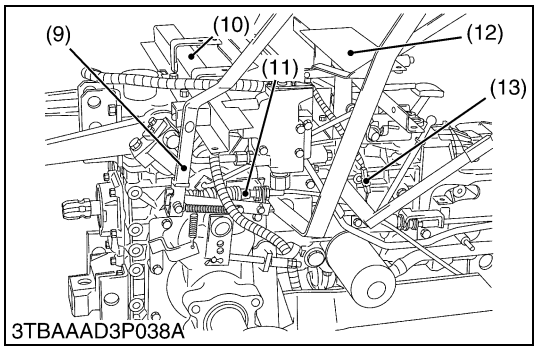

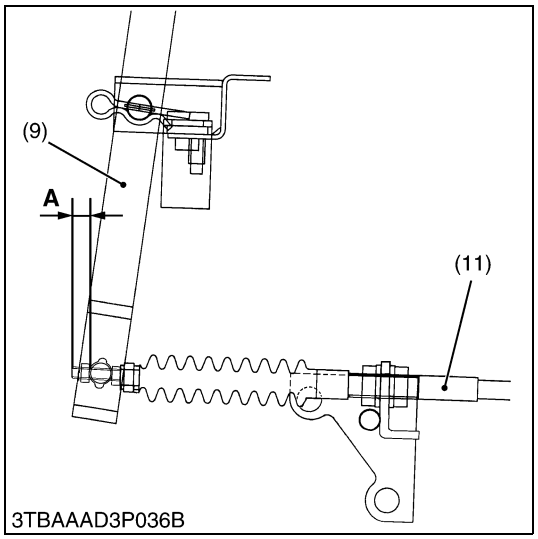

Fender and Steps (B2710)

1. Remove the all lever grips.
2. Remove the lever guide RH (2) and LH (6).
3. Remove the fenders (3), (5) and fender stay (4).
4. Remove the rubber mat (7).
5. Remove the fuel tank frame set screws and fuel tank stay.
6. Remove the step LH while lifting the fuel tank frame (1).
7. Remove the snap pins and remove the speed set link (8) and then remove the step RH while lifting the fuel tank frame (1).
8. Disconnect the coupler for safety switch and remove the seat stay, front (12).
9. Loosen the lock nus and disconnect the bi-speed turn cable (11) and then remove the seat stay, rear (10) with bi-speed turn lever (9).

■ **NOTE**

- **Measure and note the distance A, before disconnecting the bi-speed turn cable (11).**

(When reassembling)

- Be sure to adjust the position of bi-speed turn cable (See page 4-S8).

(1) Fuel Tank with Frame
(2) Lever Guide RH
(3) Fender RH
(4) Fender Stay
(5) Fender LH
(6) Lever Guide LH
(7) Rubber Mat
(8) Speed Set Link
(9) Bi-speed Turn Lever
(10) Seat Stay, Rear
(11) Bi-speed Turn Cable
(12) Seat Stay, Front
(13) Coupler for HST Safety Switch

W10164720

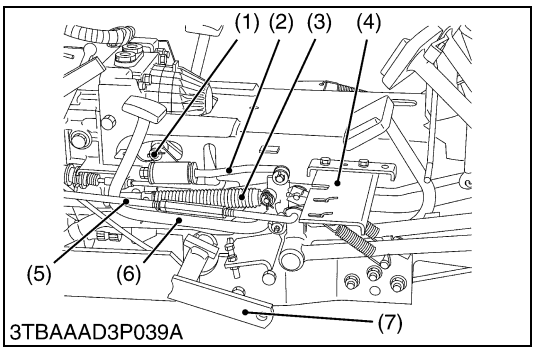

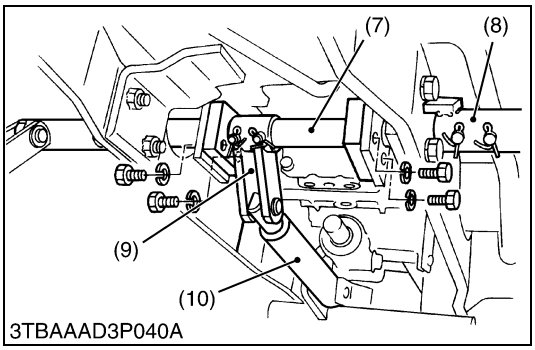

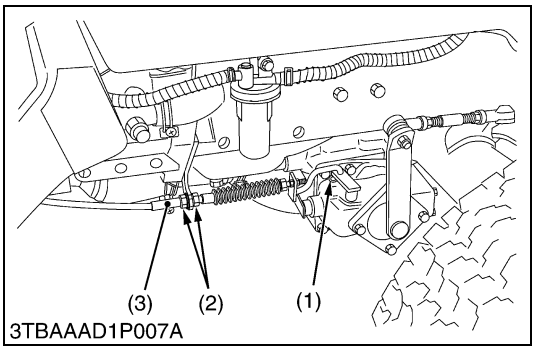

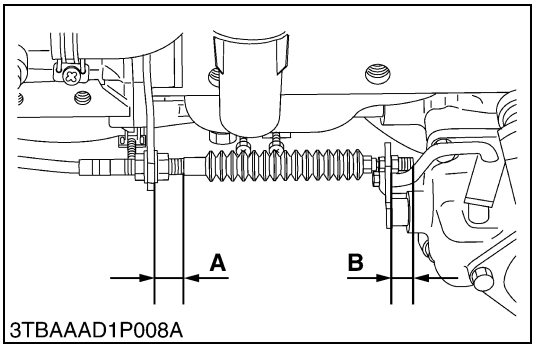

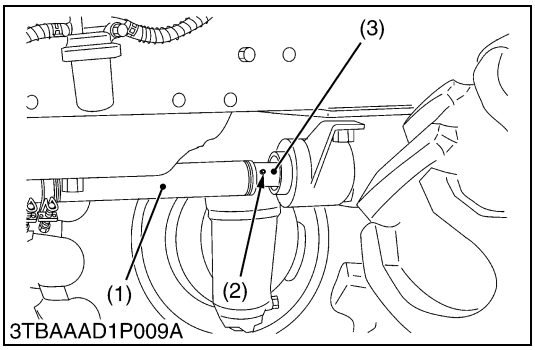

HST Pedal (HST Model)

1. Remove the lift cylinder assembly and lift cylinder shaft (7). (If equipped)
2. Remove the brake springs and spring stay (4). (B2710 only)
3. Remove the brake rod RH (5).
4. Remove the damper (3) and speed control rod assembly (2).
5. Remove the HST pedal (6).
6. Remove the speed control rod screw (1) from the neutral holder.

(When reassembling)

- Apply liquid lock (Three Bond 1324B or equivalent) to the speed control rod screw (1).

Tightening torque	Speed control rod screw	39.2 to 44.1 N·m 4.0 to 4.5 kgf·m 28.9 to 32.5 ft-lbs

(1) Speed Control Rod Screw
(2) Speed Control Rod Assembly
(3) Damper
(4) Spring Stay
(5) Brake Rod RH
(6) HST Pedal
(7) Lift Cylinder Shaft
(8) Lift Cylinder Arm
(9) Lift Cylinder Arm Middle
(10) Lift Cylinder

W10169370

Bi-speed Turn Cable

1. Remove the spring lock pin (1) and loosen the lock nuts (2) and then remove the bi-speed turn cable (3).

(When reassembling)

- When reassembling the bi-speed turn cable (3), make sure the distance **A**.

Distance **A**	Factory spec.	B2110 B2410	18 mm 0.71 in.
		B2710	16 mm 0.63 in.

(Reference)

Distance **B**	Factory spec.	B2110 B2410	10 mm 0.39 in.
		B2710	8 mm 0.31 in.

(1) Spring Lock Pin
(2) Lock Nut
(3) Bi-speed Turn Cable

W10171350

Propeller Shaft Cover and Coupling

1. Loosen the clamp and slide the propeller shaft cover (1) to the rear.
2. Tap out the spring pin (2) and then slide the coupling (3) to the rear.

(When reassembling)

- Apply grease to the splines of the propeller shaft and coupling.

(1) Propeller Shaft Cover
(2) Spring Pin
(3) Coupling

W10174860

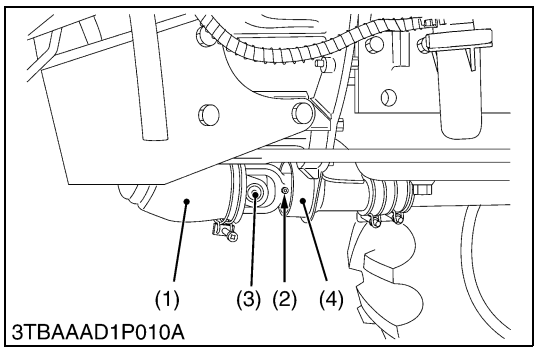

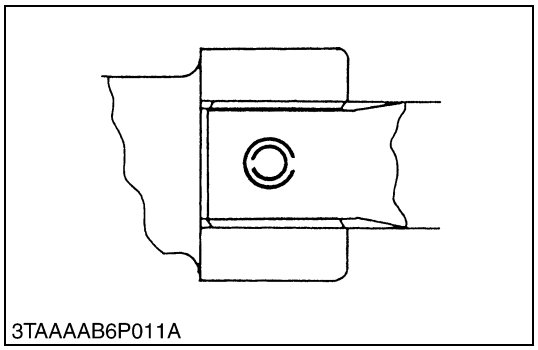

Universal Joint and Bearing Holder

1. Loosen the clamp and slide the universal joint cover (1) to the rear.
2. Tap out the spring pins (2) and then slide the universal joint (3) to the rear.
3. Remove the bearing holder (4) with propeller shaft and universal joint.

(When reassembling)

- Apply grease to the splines of the propeller shaft and universal joint.
- When inserting the spring pins (2), face their splits in the direction parallel to the universal joint as shown in the figure.

(1) Universal Joint Cover
(2) Spring Pin
(3) Universal Joint
(4) Bearing Holder

W10176110

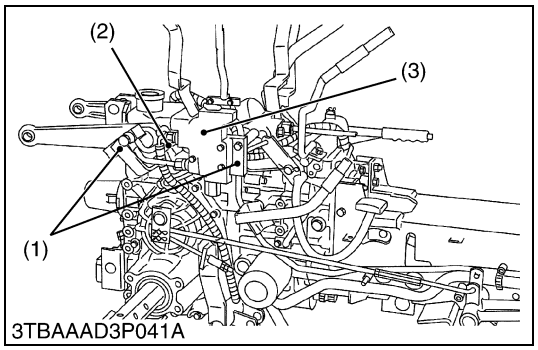

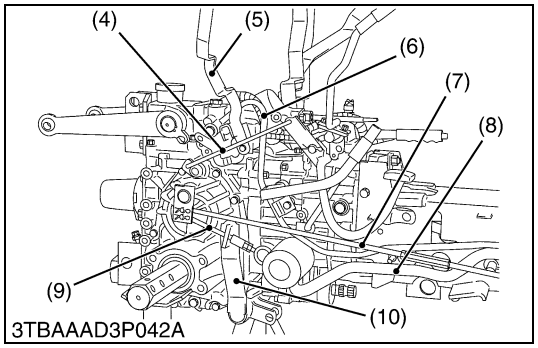

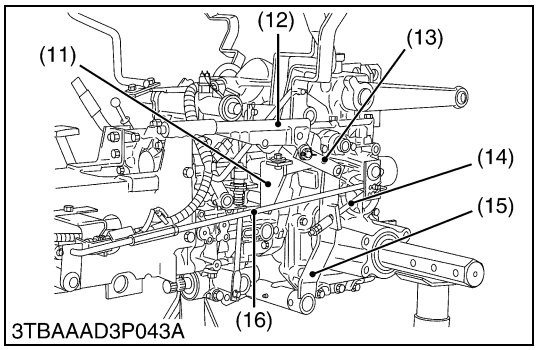

Preparation of Separation (Manual Transmission Model)

1. Loosen the lock nut and disconnect the feedback rod (2) from lift arm.
2. Remove the remote control valve (3) and hydraulic outlet (1) as a unit.
3. Disconnect the differential lock rod (4).
4. Remove the position control lever (5).
5. Remove the delivery pipe (6) joint bolt and pipe setting screw.
6. Loosen the pipe clamps and disconnect the suction pipe (8).
7. Remove the lock nuts and remove the parking brake rods (9), (14).
8. Disconnect the parking brake lever plate (13) and remove the parking brake lever (12), lever stay (11) and parking brake lever plate (13) as a unit.
9. Remove the clevis pin and remove the parking brake arm (15) and shaft (10).

(When reassembling)

- Be sure to adjust the parking brake lever. (See page 5-S4.)

Tightening torque	Delivery pipe joint bolt	34.0 to 39.0 N·m 3.5 to 4.0 kgf·m 25.1 to 28.7 ft-lbs

(1) Hydraulic Outlet
(2) Feedback Rod
(3) Remote Valve
(4) Differential Lock Rod
(5) Position Control Lever
(6) Delivery Pipe
(7) Brake Rod RH
(8) Suction Pipe
(9) Parking Brake Rod RH
(10) Parking Brake Arm Shaft
(11) Parking Brake Lever Stay
(12) Parking Brake Lever
(13) Parking Brake Lever Plate
(14) Parking Brake Rod LH
(15) Parking Brake Arm
(16) Brake Rod LH

W10177840

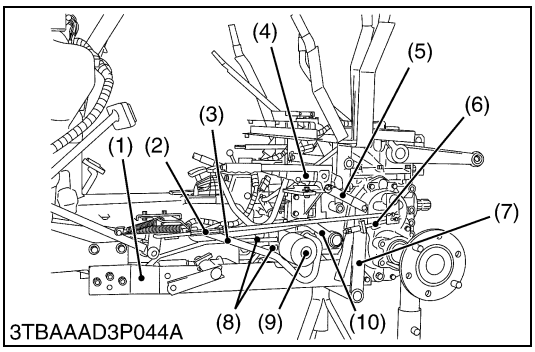

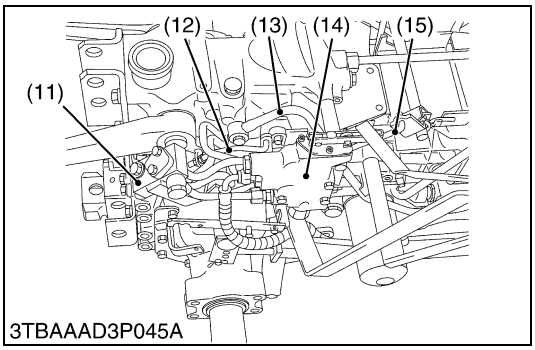

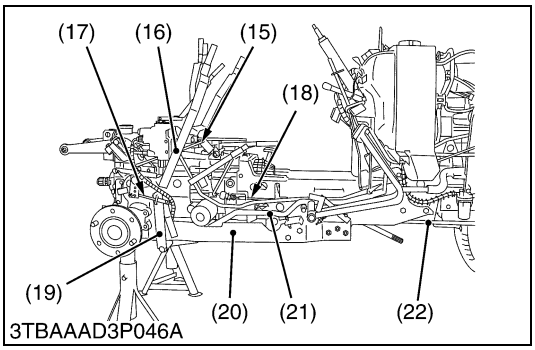

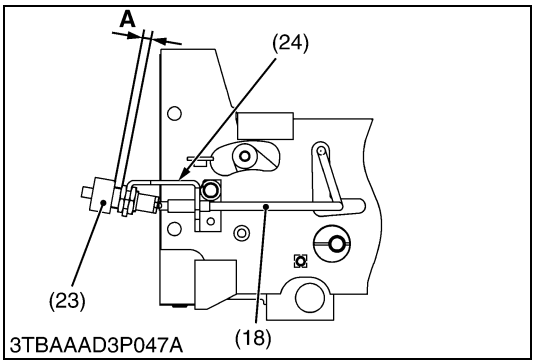

Preparation of Separation (HST Model)

1. Remove the brake rod LH (2) and parking brake rods (6), (17).
2. Disconnect the parking brake lever plate (5) and arm (7), and remove the parking brake lever (4) with stay and lever plate (5) as a unit.
3. Remove the clevis pin and remove the parking brake arm (7) and parking brake arm shaft (19).
4. Remove the connecting pipe (10) and HST suction pipe (3).
5. Remove the sub frame LH (1).
6. Remove the hydraulic oil filter assembly (9) and pipes (8).
7. Loosen the lock nut and disconnect the feedback rod (12) from the lift arm.
8. Remove the remote control valve (14) and hydraulic outlet (11) as a unit.
9. Disconnect the differential lock rod (15).
10. Remove the position control lever (16).
11. Remove the delivery pipe (13) joint bolt and pipe setting screw.
12. Remove the sub frame RH (20).
13. Loosen the pipe clamps and disconnect the suction pipe (21).
14. Remove the HST safety switch holder with neutral rod (18).
15. Disconnect the HST delivery pipe (22).

(When reassembling)

- Be sure to adjust the parking brake lever. (See page 5-S4.)

■ **IMPORTANT**

- **When HST safety switch (5) has been removed, be sure to adjust the length A.**

(Reference)

- Length **A** : 7.5 to 8.5 mm (0.29 to 0.33 in.)

Tightening torque	Joint bolt (3P delivery pipe)	34.0 to 39.0 N·m 3.5 to 4.0 kgf·m 25.1 to 28.7 ft-lbs
	HST delivery pipe	34.0 to 39.0 N·m 3.5 to 4.0 kgf·m 25.1 to 28.7 ft-lbs

(1) Sub Frame LH
(2) Brake Rod LH
(3) HST Suction Pipe
(4) Parking Brake Lever
(5) Parking Brake Lever Plate
(6) Parking Brake Rod LH
(7) Parking Brake Arm
(8) Hydraulic Pipe
(9) Hydraulic Oil Filter Assembly
(10) Connecting Pipe
(11) Hydraulic Outlet
(12) Feedback Rod
(13) Delivery Pipe for 3-Point Hitch
(14) Remote Control Valve
(15) Differential Lock Rod
(16) Position Control Lever
(17) Parking Brake Rod RH
(18) HST Neutral Rod
(19) Parking Brake Arm Shaft
(20) Sub Frame RH
(21) Suction Pipe
(22) HST Delivery Pipe
(23) HST Safety Switch
(24) Safety Switch Holder

W10182960

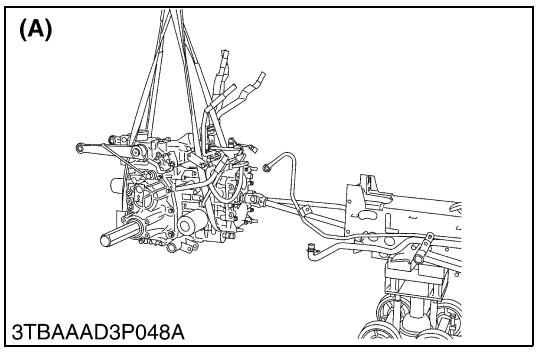

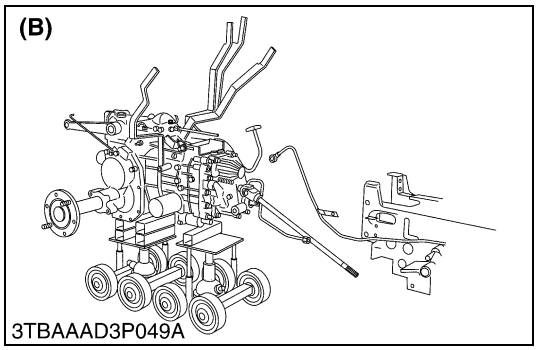

Separating Center Frame

1. Place the jack under the transmission case and center frame.
2. Remove the center frame mounting screws and nuts, and separate the center from transmission case.

(When reassembling)

- Apply grease to the splines of HST pump shaft, front wheel propeller shaft, universal joint and ball coupling.
- Reinstall the connecting pipe and two O-rings securely. (Manual Transmission Model)

(A) Manual Transmission Model **(B) HST Model**

W10191530

[4] DISASSEMBLING TRANSMISSION CASE

(1) Manual Transmission Model

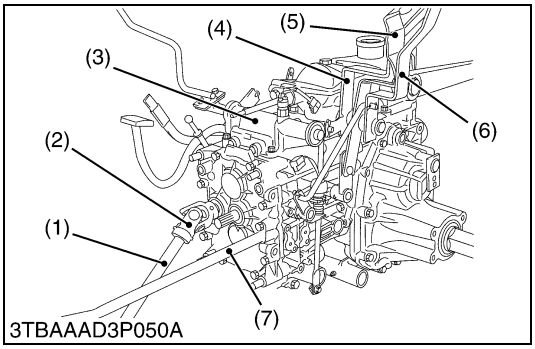

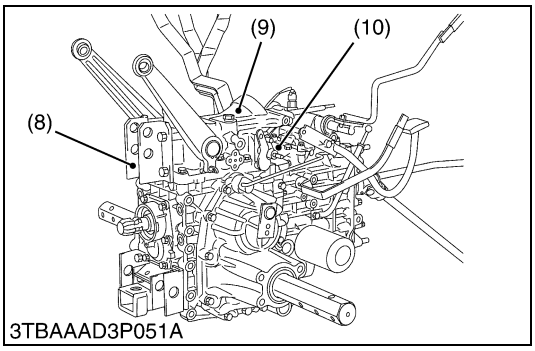

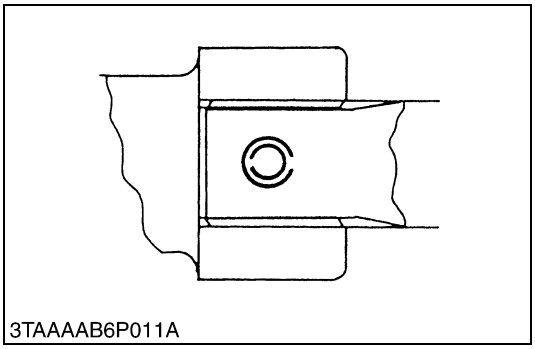

Separating Hydraulic Cylinder and Main Shift Cover

1. Remove the connecting pipe (7).
2. Tap out the spring pins and remove the universal joint (2) with front wheel drive propeller shaft (1).
3. Remove the external snap ring and remove the rear PTO shift lever (6) with rod, range gear shift lever (5) and mid-PTO shift lever (4).
4. Remove the top link bracket LH (8).
5. Remove the connecting plate (10) and hydraulic cylinder mounting screws and remove the hydraulic cylinder assembly (9).
6. Remove the main shift cover mounting screws and remove the main shift cover (3) with differential lock pedal.

(When reassembling)

- When inserting the spring pins, face their splits in the direction parallel to the universal joint as shown in the figure.
- Apply liquid gasket (Three Bond 1208D or equivalent) to joint face of the main shift cover to transmission case and differential case to the hydraulic cylinder.
- Apply grease to the spline of the front wheel drive propeller shaft, universal joint and ball coupling.
- Reinstall the connecting pipe with O-rings and back-up ring securely.

Tightening torque	Connecting plate mounting screw and nut	39.2 to 44.1 N·m 4.0 to 4.5 kgf·m 28.9 to 32.5 ft-lbs
	Top link bracket mounting screw	77.5 to 90.1 N·m 7.9 to 9.2 kgf·m 57.2 to 66.5 ft-lbs
	Hydraulic cylinder mounting screw	39.2 to 44.1 N·m 4.0 to 4.5 kgf·m 28.9 to 32.5 ft-lbs
	Main shift cover mounting screw	17.7 to 20.6 N·m 1.8 to 2.1 kgf·m 13.0 to 15.2 ft-lbs

(1) Front Wheel Drive Propeller Shaft
(2) Universal Joint
(3) Main Gear Shift Cover
(4) Mid-PTO Shift Lever
(5) Range Gear Shift Lever
(6) Rear PTO Shift Lever
(7) Connecting Pipe
(8) Top Link Bracket LH
(9) Hydraulic Cylinder Assembly
(10) Connecting Plate

W10193920

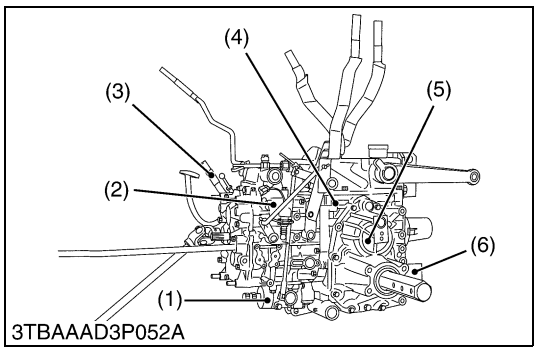

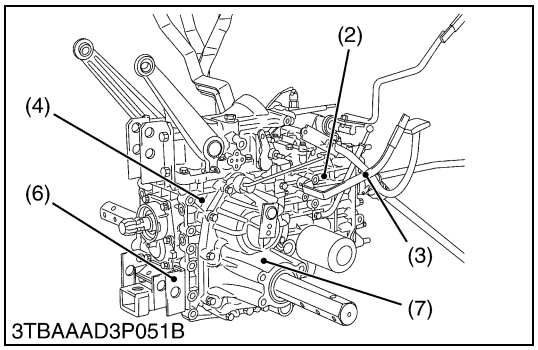

Separating Rear Axle Case, Mid-PTO Case, Drawbar Frame and Transmission Case

1. Remove the front wheel drive lever (3).
2. Remove the rear axle cases (5), (7) from differential case.
3. Remove the mid-PTO case (1) from transmission case.
4. Remove the drawbar frame (6).
5. Separate the transmission case (2) and differential case (4).

(When reassembling)

- Apply liquid gasket (Three Bond 1208D or equivalent) to joint face of the rear axle cases, mid-PTO case and transmission case to differential case.

Tightening torque	Drawbar frame mounting screw	62.8 to 72.5 N·m 6.4 to 7.4 kgf·m 46.3 to 53.5 ft-lbs
	Mid-PTO case mounting screw	39.2 to 44.1 N·m 4.0 to 4.5 kgf·m 28.9 to 32.5 ft-lbs
	Transmission case mounting screw and nut	39.2 to 44.1 N·m 4.0 to 4.5 kgf·m 28.9 to 32.5 ft-lbs
	Rear axle case mounting screw	39.2 to 44.1 N·m 4.0 to 4.5 kgf·m 28.9 to 32.5 ft-lbs

(1) Mid-PTO Case
(2) Transmission Case
(3) Front Wheel Drive Lever
(4) Differential Case
(5) Rear Axle Case LH
(6) Drawbar Frame
(7) Rear Axle Case RH

W10198890

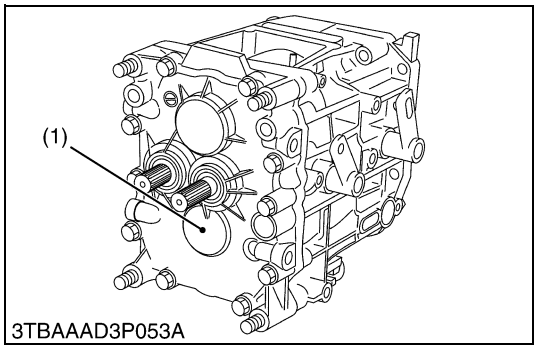

Front Cover

1. Remove the front cover mounting screws and remove the front cover (1).

(When reassembling)

- Apply liquid gasket (Three Bond 1208D or equivalent) to joint face of the front cover to transmission case.

Tightening torque	Front case mounting screw	39.2 to 44.1 N·m 4.0 to 4.5 kgf·m 28.9 to 32.5 ft-lbs

(1) Front Cover

W10204770

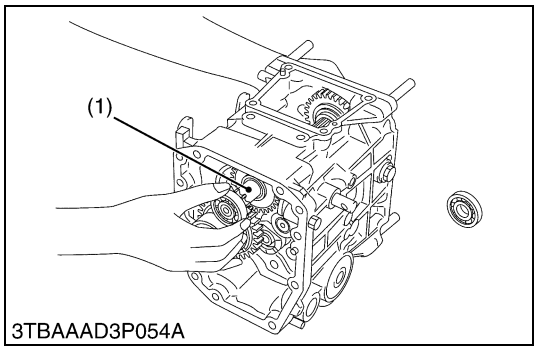

4th Gear Shaft

1. Remove the bearing, 30T shifter gear and 13T-17T shifter gear.
2. Draw out the 4th gear shaft (1) with 11T gear rearward.

(1) 4th Gear Shaft

W10205970

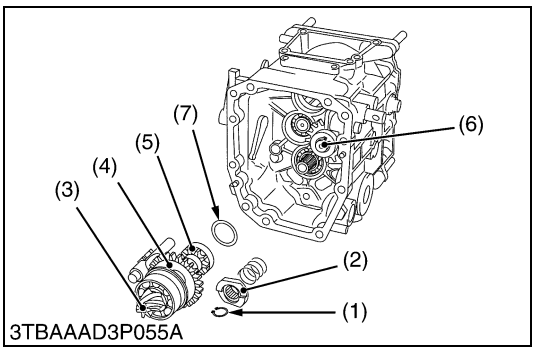

Spiral Bevel Pinion Shaft and 20T Shifter Gear

1. Remove the external snap ring (1) and one-way clutch cam (2).
2. Remove the spiral bevel pinion shaft (3) with 12T-32T shifter gear (4), 13T gear (5), and shift fork with shift rod.
3. Remove the external snap ring and remove the 20T shifter gear (6).

(When reassembling)

- When installing the spiral bevel pinion shaft, be sure to install the shim (7).

(1) External Snap Ring
(2) One-way Clutch Cam
(3) Spiral Bevel Pinion Shaft
(4) 12T-32T Shifter Gear
(5) 13T Gear
(6) 20T Shifter Gear
(7) Shim

W10206810

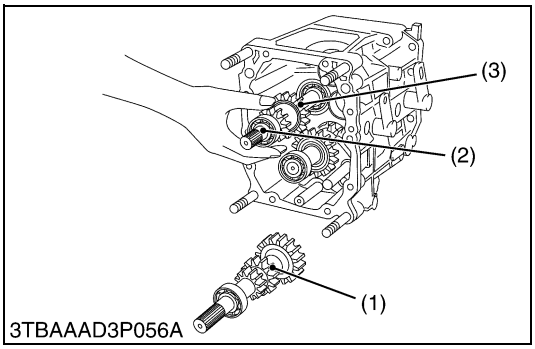

2nd Gear Shaft and Front Wheel Drive Shaft

1. Remove the 2nd gear shaft (1) with bearing.
2. Draw out the front wheel drive shaft (2) with 16T-20T gear (3).

(When reassembling)

- When installing the needle bearing into the 16T-20T gear, apply transmission oil to the needle bearings.

(1) 2nd Gear Shaft
(2) Front Wheel Drive Shaft
(3) 16T-20T Gear

W10209260

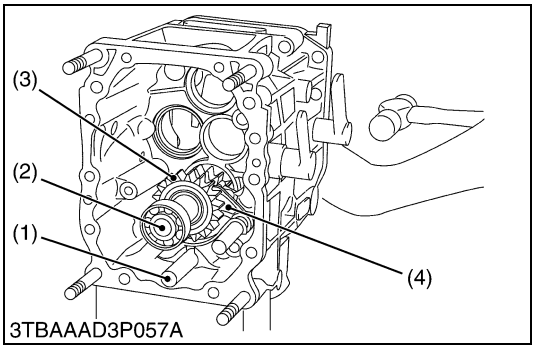

Middle Shaft and 3rd Shaft

1. Tap out the middle shaft (1) and remove the 19T gear with bearing.
2. Draw out the 3rd shaft (2) with 17T gear (3), 13T gear and shift fork (4) with shift fork rod (7).

(When reassembling)

- When installing the needle bearing (5) into the 13T gear (6), apply transmission oil to the needle bearing.
- Installing shift fork rod and shift fork as shown figure.

(1) Middle Shaft
(2) 3rd Shaft
(3) 17T Gear
(4) Rear PTO Shift Fork
(5) Needle Bearing
(6) 13T Gear
(7) Shift Fork Rod

a : Front
b : Rear

W10210470

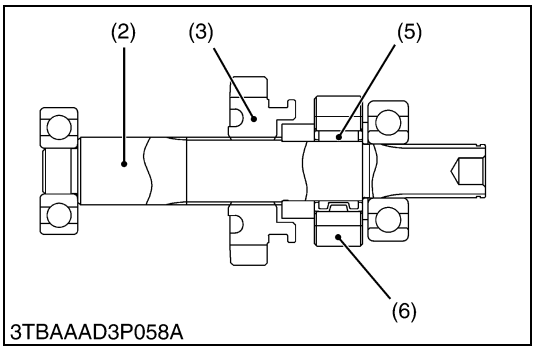

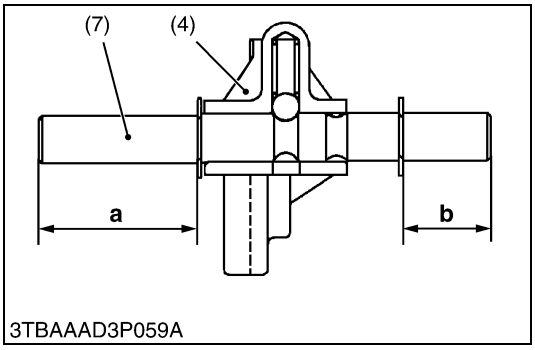

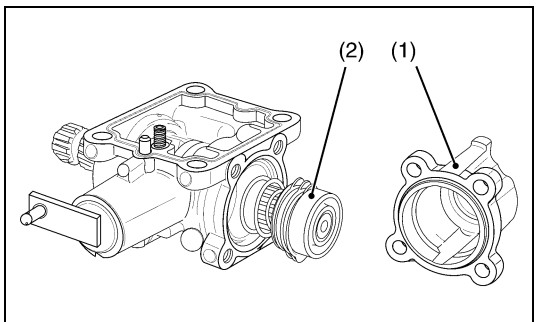

3TBAAAD3P060A

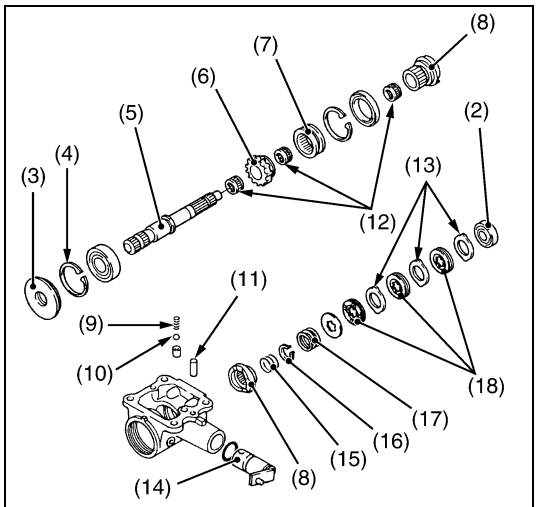

3TBAAAD3P061A

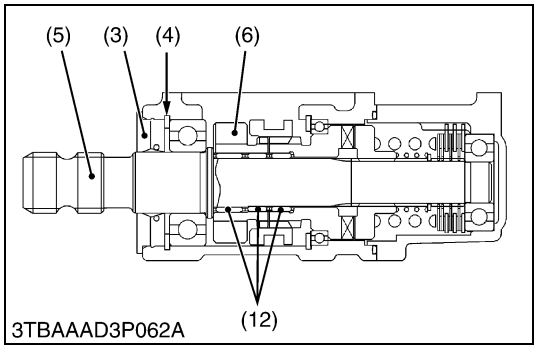

3TBAAAD3P062A

Mid-PTO Shaft and One-way Clutch

1. Remove the mid-PTO case rear cover mounting screws and separate the rear cover (1).
2. Remove the bearing (2) and remove the friction plates (13), brake discs (18) and spring (17).
3. Remove the external snap ring (16) and remove the spring (15) and one-way clutch cam (8).
4. Remove the spring (9) and ball (10).
5. Draw out the dowel pin (11) and remove the shift arm (14) with shifter.
6. Remove the oil seal (3) and internal snap ring (4).
7. Remove the mid-PTO shaft (5) with bearing, 11T gear (6) and shifter (7).

(When reassembling)

- Apply grease to lip and outer of oil seal.
- When installing the needle bearings (12) into the 11T gear and one-way clutch cam, apply transmission oil to the needle bearings.

■ **NOTE**

- **When installing the needle bearings (12), noting the position of needle bearings onto the mid-PTO shaft shown in the figure.**

Tightening torque	Mid-PTO rear cover mounting screw	17.7 to 20.6 N·m 1.8 to 2.1 kgf·m 13.0 to 15.2 ft-lbs

(1) Mid-PTO Case Rear Cover
(2) Bearing
(3) Oil Seal
(4) Internal Snap Ring
(5) Mid-PTO Shaft
(6) 11T Shifter
(7) Shifter
(8) One-way Clutch Cam
(9) Spring
(10) Ball
(11) Dowel Pin
(12) Needle Bearing
(13) Friction Plate
(14) Shift Arm
(15) Spring
(16) External Snap Ring
(17) Spring
(18) Brake Disc

W10211930

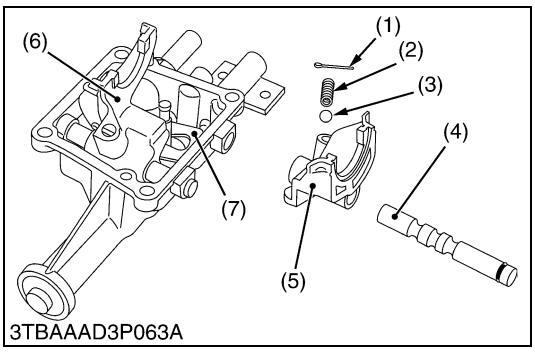

3TBAAAD3P063A

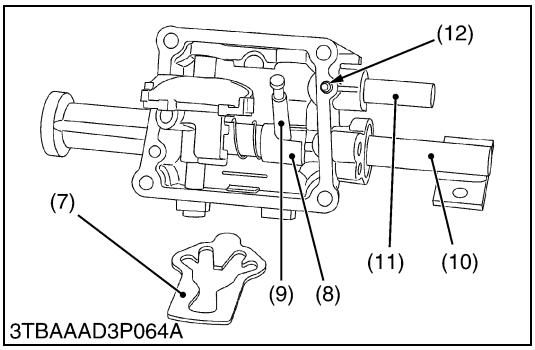

3TBAAAD3P064A

Main Gear Shift Fork

1. Remove the cotter pin (1) and remove the spring (2) and ball (3).
2. Draw out the shift rod (4) and remove the 1st-reverse gear shift fork (5).
3. Remove the 2nd-3rd gear shift fork (6), in the same way as the 1st-reverse shift fork removing procedure.
4. Take out the interlocker (7) and slide the shift arm stopper (8) and then remove the shift arm (9).
5. Remove the shift shaft (10).
6. When remove the differential lock pedal shaft (11) draw out the dowel pin (12) first.

(1) Cotter Pin
(2) Spring
(3) Ball
(4) Shift Rod
(5) 1st-Reverse Gear Shift Fork
(6) 2nd-3rd Gear Shift Fork
(7) Interlocker
(8) Shift Arm Stopper
(9) Shift Arm
(10) Shift Shaft
(11) Differential Lock Pedal Shaft
(12) Dowel Pin

W10217160

(2) HST Model

(A) Separating Each Section

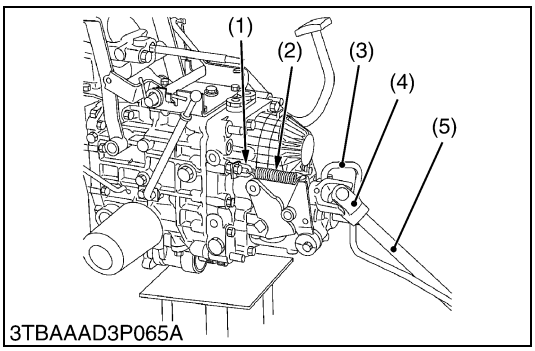

3TBAAAD3P065A

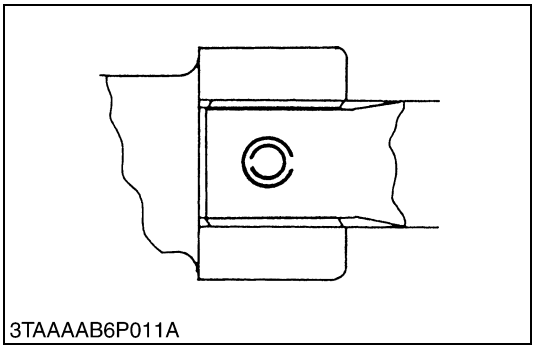
3TAAAAB6P011A

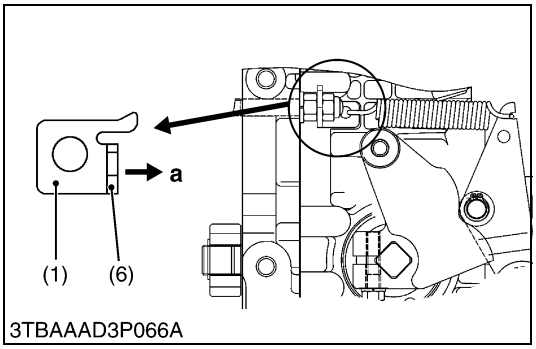

3TBAAAD3P066A

Separating Transmission Case and Hydrostatic Transmission (HST)

1. Tap out the spring pins and remove the universal joint (4) with front wheel drive propeller shaft (5).
2. Remove the HST delivery pipe (3).
3. Remove the neutral spring (2) and remove the spring holder (1).
4. Separate the HST from transmission case.

(When reassembling)

- Apply liquid gasket (Three Bond 1208D or equivalent) to joint face of the HST and transmission case.
- When inserting the spring pins, face their splits in the direction at a right angle to the universal joint and propeller shaft as shown in the figure.
- Apply grease to the spline of the HST pump shaft, front wheel propeller shaft, universal joint and ball coupling.

■ **NOTE**

- **When reassembling the spring holder, spring hook (6) must be inside as shown in the figure.**

Tightening torque	Spring holder mounting screw	39.2 to 44.1 N·m 4.0 to 4.5 kgf·m 28.9 to 32.5 ft-lbs

(1) Spring Holder
(2) Neutral Spring
(3) HST Delivery Pipe
(4) Universal Joint
(5) Front Wheel Driver Propeller Shaft
(6) Spring Hook

a : HST Case Side

W10219720

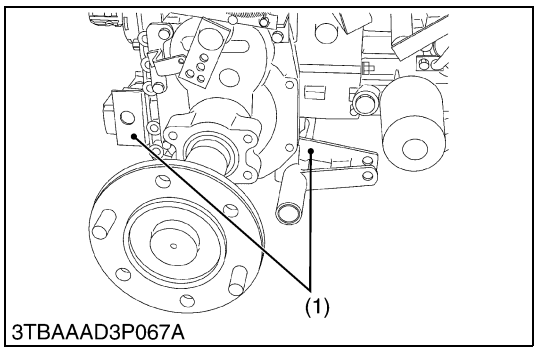

3TBAAAD3P067A

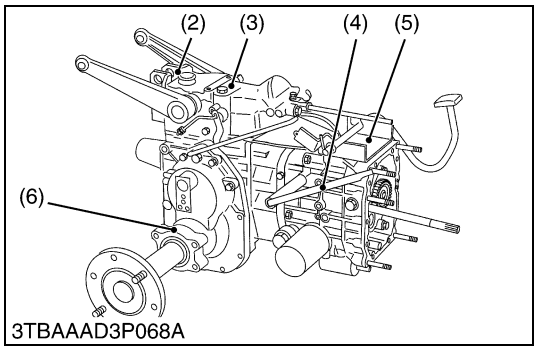

3TBAAAD3P068A

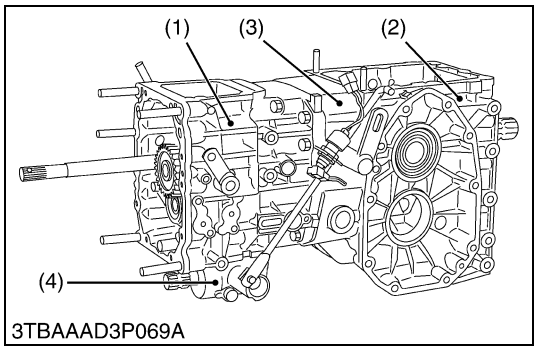

3TBAAAD3P069A

Separating Hydraulic Cylinder, Rear Axle Cases and Others

1. Remove the drawbar frame (1).
2. Remove the front wheel drive lever (4).
3. Remove the differential lock pedal support (5).
4. Remove the top link bracket LH (2) and remove the hydraulic cylinder (3).
5. Remove the rear axle case (6).

(When reassembling)

- Apply liquid gasket (Three Bond 1208D or equivalent) to joint face of the differential case to hydraulic cylinder and rear axle cases.

Tightening torque	Hydraulic cylinder mounting screw and nut	39.2 to 44.1 N·m 4.0 to 4.5 kgf·m 28.9 to 32.5 ft-lbs
	Rear axle case mounting screw	39.2 to 44.1 N·m 4.0 to 4.5 kgf·m 28.9 to 32.5 ft-lbs

(1) Drawbar Frame
(2) Top Link Bracket LH
(3) Hydraulic Cylinder
(4) Front Wheel Drive Lever
(5) Differential Lock Pedal
(6) Rear Axle Case

W10223860

Separating Mid-PTO Case, Transmission Case and Differential Case

1. Remove the mid-PTO case mounting screws and separate the mid-PTO case (4) and transmission case (1).
2. Remove the transmission case mounting screws and nuts and separate the differential case (2) and transmission case (1) with middle case (3) as a unit.

(When reassembling)

- Apply liquid gasket (Three Bond 1208D or equivalent) to joint face of the transmission case and differential case.

Tightening torque	Transmission case mounting screw and nut	39.2 to 44.1 N·m 4.0 to 4.5 kgf·m 28.9 to 32.5 ft-lbs

(1) Transmission Case
(2) Differential Case
(3) Middle Case (B2710)
(4) Mid-PTO Case

W10226120

(B) Disassembling Hydrostatic Transmission

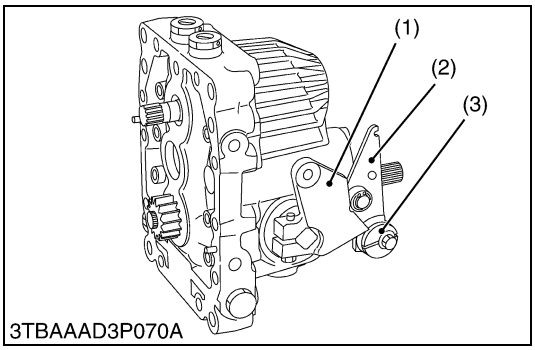

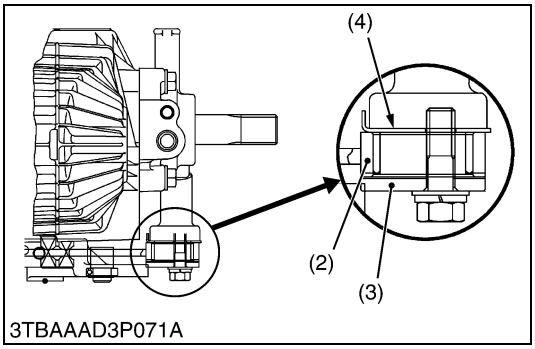

Neutral Holder and Neutral Holder Arm

1. Place parting marks on the neutral adjuster (3) and the neutral holder arm (2).
2. Remove the neutral holder arm (2) with neutral adjuster (3).
3. Remove the screw and pull out the neutral holder (1).

(When reassembling)

- Align the parting marks and install the neutral adjuster and the neutral holder arm.
- Be sure to install the spacer (4).

Tightening torque	Neutral adjuster lock screw	17.7 to 20.6 N·m 1.8 to 2.1 kgf·m 13.0 to 15.2 ft-lbs
	Neutral holder mounting screw	23.6 to 27.4 N·m 2.4 to 2.8 kgf·m 17.4 to 20.2 ft-lbs

(1) Neutral Holder
(2) Neutral Holder Arm
(3) Neutral Adjuster
(4) Spacer

W10228840

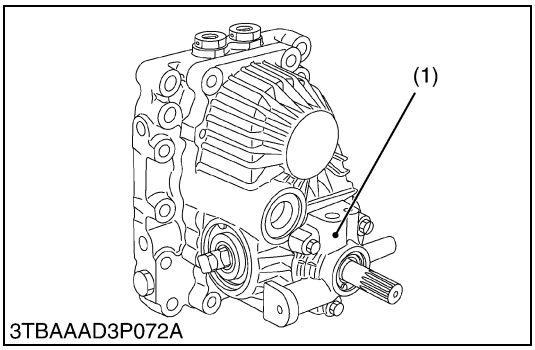

Charge Pump

1. Remove the charge pump mounting screws, and remove the charge pump assembly (1) from the HST housing.

(When reassembling)

■ **NOTE**

- **Take care not to damage the O-ring.**

Tightening torque	Charge pump mounting screw	17.7 to 20.6 N·m 1.8 to 2.1 kgf·m 13.0 to 15.2 ft-lbs

(1) Charge Pump Assembly
(2) Gerotor Assembly
(3) Charge Pump Housing

W10230730

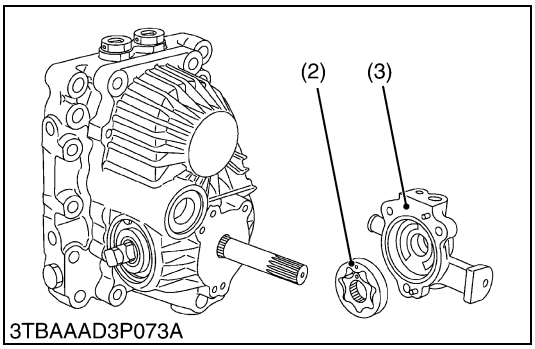

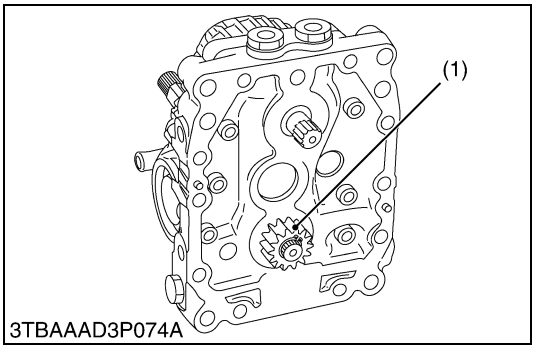

14T Gear

1. Remove the external snap ring and draw out the 14T gear (1).

(1) 14T Gear

W10232800

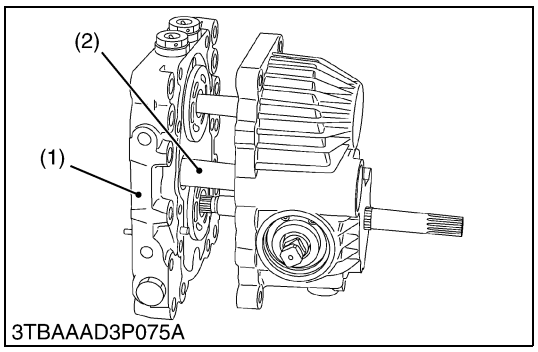

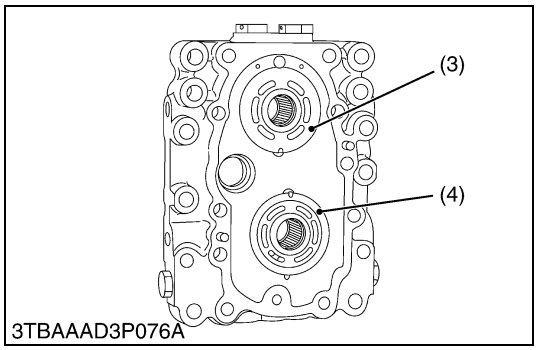

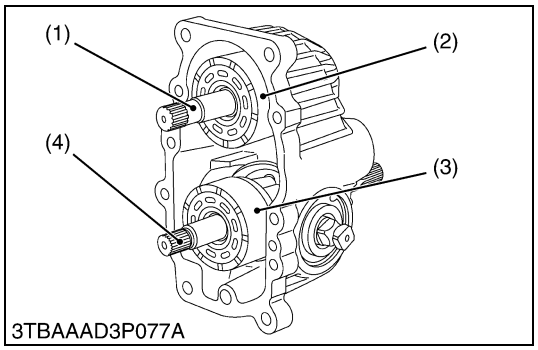

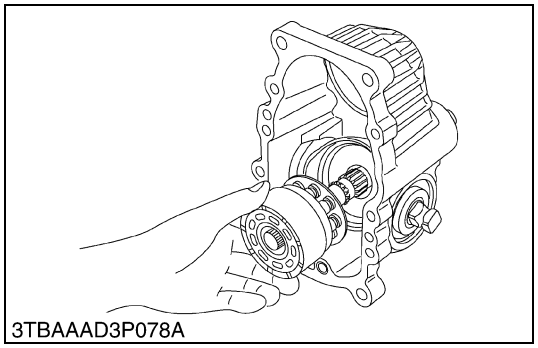

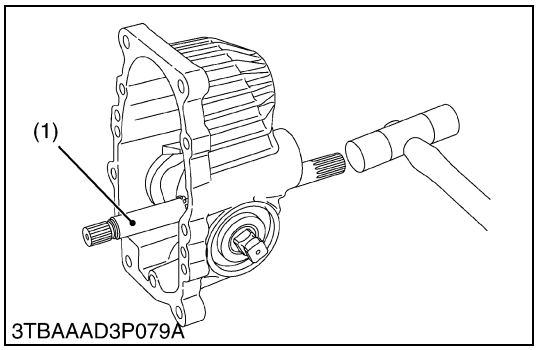

Center Section

1. Remove the center section mounting hex. socket head screws.
2. Tap the front of center section flange with a soft hammer and separate the center section (1) from HST housing.

(When reassembling)

- Cover the splines of each shaft with thin tape to protect sealing lip.
- Install center section with gasket, O-ring and valve plates in place.

■ **IMPORTANT**

- **Valve plates (3), (4) may stick to the center section but they are not fixed. Take care not to drop them.**
- **Valve plates are not interchangeable. Valve plate of pump has two notches and the one of motor has no.**

Tightening torque	Center section mounting hex. socket screw	48.1 to 55.8 N·m 4.9 to 5.7 kgf·m 35.5 to 41.2 ft-lbs

(1) Center Section
(2) Front Wheel Drive Shaft Pipe
(3) Valve Plate of Motor
(4) Valve Plate of Pump

W10233570

Motor Cylinder Block and Pump Cylinder Block

1. Pull out the output shaft (1) and motor cylinder block (2) with pistons as a unit.
2. Slide out the pump cylinder block (3) with pistons.

(1) Output Shaft
(2) Motor Cylinder Block
(3) Pump Cylinder Block
(4) Input Shaft

W10235500

Input Shaft

1. Tap out the input shaft (1) to the rear.

(1) Input Shaft

W10237420

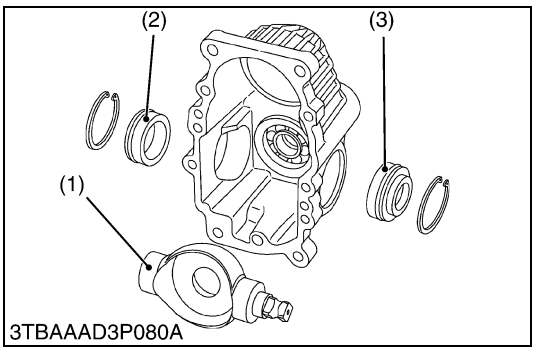

Cover A, B and Trunnion Shaft

1. Remove the internal snap rings both side.
2. Tap the trunnion shaft (1) using a soft hammer to create a clearance between the case and the cover **B** (2).
   Then, pry the cover **B** (2) open with a screw-driver. Pry the cover **A** (3) in the same way.
3. Take out the trunnion shaft (1).

(When reassembling)

■ **NOTE**
- **Take care not to damage the O-rings.**

(1) Trunnion Shaft
(2) Cover **B**
(3) Cover **A**

W10238190

(C) Disassembling Transmission Case

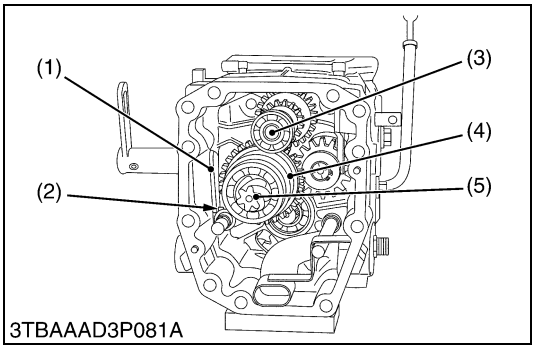

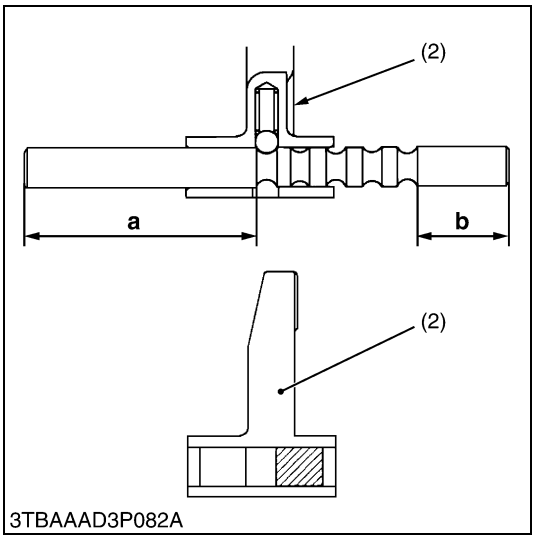

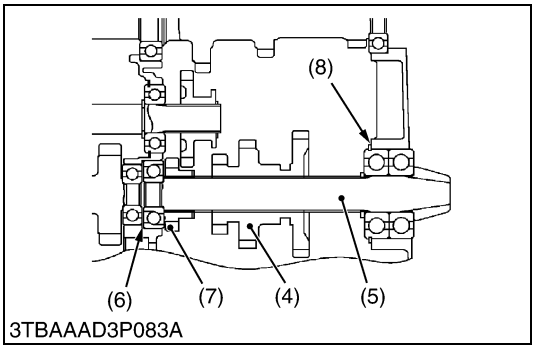

4th Gear Shaft and Spiral Bevel Pinion Shaft

(B2110, B2410)

1. Remove the spiral bevel pinion shaft (5) with 13T-27T shifter gear (4), 13T gear (7) and shift fork (2).

(B2710)

1. Remove the spiral bevel pinion shaft (5) with 14T-27T-32T shifter gear (4), 14T gear (7) and shift fork (2).
2. Remove the 4th gear shaft (3).

(When reassembling)

- When installing the spiral bevel pinion shaft, be sure to install the shims (6).

■ **IMPORTANT**
- **When disassembling the spiral bevel pinion shaft (5), be sure to replace the external snap ring (8) with new one.**
- **When set the shift fork (2) and shift lever (1), make sure to the shift lever set position at rear groove (shown in figure).**

(1) Shift Lever
(2) Shift Fork
(3) 4th Gear Shaft
(4) 13T-27T Shifter Gear
(B2110, B2410)
14T-27T-32T Shifter Gear (B2710)
(5) Spiral Bevel Pinion Shaft
(6) Shim
(7) 13T Gear (B2110, B2410)
14T Gear (B2710)
(8) External Snap Ring

a : Front
b : Rear

W10239920

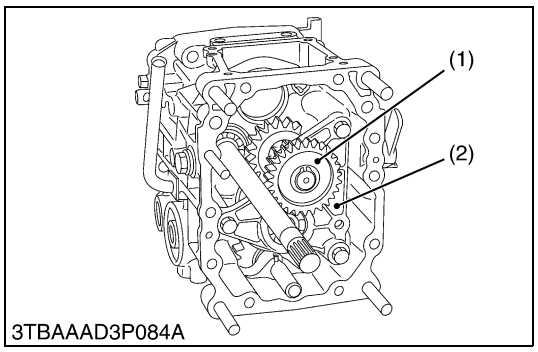

3TBAAAD3P084A

Bearing Holder

1. Remove the external snap ring and remove the 27T gear (1).
2. Remove the bearing holder mounting screws and remove the bearing holder (2).

(When reassembling)

Tightening torque	Bearing holder mounting screw	50 to 55 N·m 5.1 to 5.6 kgf·m 36.9 to 40.1 ft-lbs

(1) 27T Gear
(2) Bearing Holder

W10245710

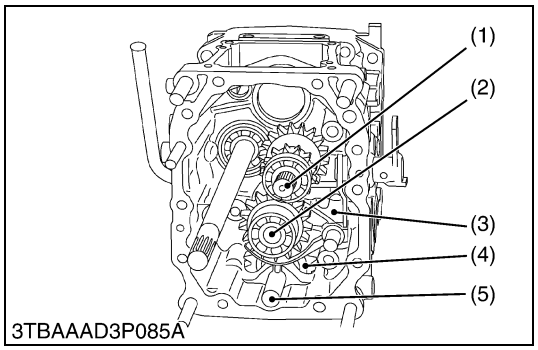

3TBAAAD3P085A

2nd Gear Shaft and Middle Shaft

1. Remove the 2nd gear shaft (1) with bearings.
2. Remove the 3rd shaft assembly (2) and shift fork (3) with shift fork rod (9).
3. Remove the middle shaft (5) and 19T gear (4) with bearing.

(When reassembling)

- When assembling the 19T gear (4), face the chamfer side to the rear.
- When installing the needle bearing (7) into the 13T gear (8) apply tranmsission oil to the needle bearing.
- Install shift fork rod and shift fork as shown in the figure.

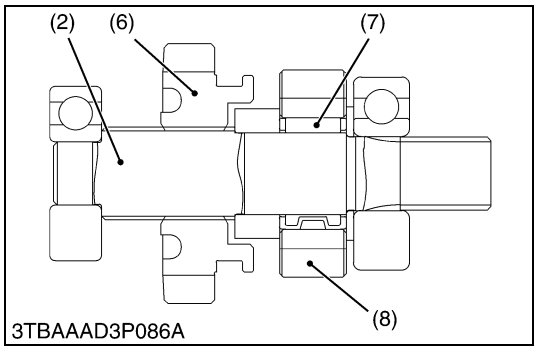

3TBAAAD3P086A

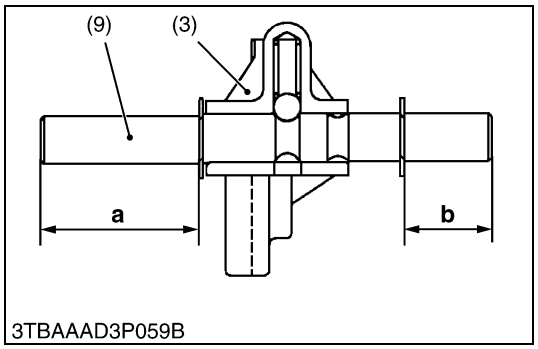

3TBAAAD3P059B

(1) 2nd Gear Shaft
(2) 3rd Shaft Assembly
(3) Shift Fork
(4) 19T Gear
(5) Middle Shaft
(6) 17T Gear
(7) Needle Bearing
(8) 13T Gear
(9) Shift Fork Rod

a : Front
b : Rear

W10247410

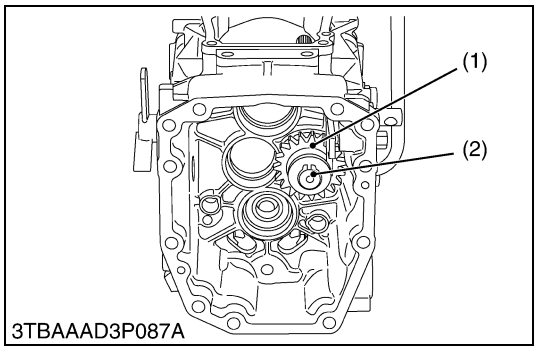

3TBAAAD3P087A

Front Wheel Drive Shaft

1. Remove the external snap ring and remove the 20T or 19T shifter gear (1).
2. Draw out the front wheel drive shaft (2) to the front.

(1) 20T Shifter Gear (B2110, B2410)
19T Shifter Gear (B2710)
(2) Front Wheel Drive Shaft

W10250090

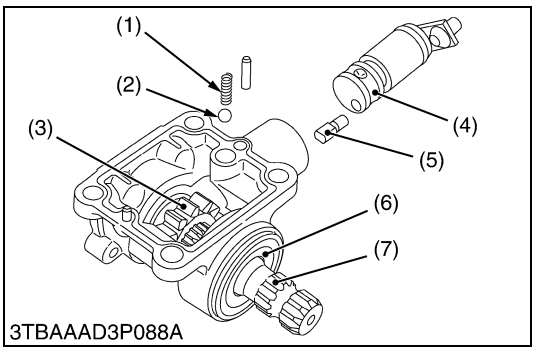

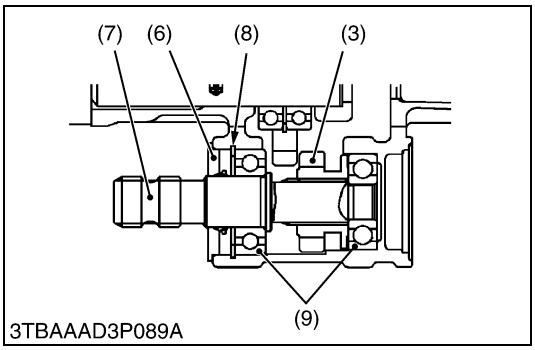

Mid-PTO Shaft

1. Remove the spring (1) and ball (2).
2. Draw out the dowel pin and remove the shift arm (4) with shifter (5).
3. Remove the oil seal (6) and internal snap ring (8).
4. Remove the mid-PTO shaft (7) with 11T shifter gear (3) and bearings (9).

(When reassembling)

- Apply grease to lip and outer of oil seal.

(1) Spring
(2) Ball
(3) 11T Shifter Gear
(4) Shift Arm
(5) Shifter
(6) Oil Seal
(7) Mid-PTO Shaft
(8) Internal Snap Ring
(9) Bearing

W10251030

[5] DISASSEMBLING DIFFERENTIAL GEAR CASE

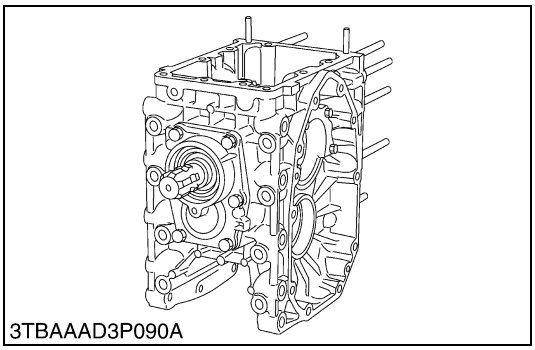

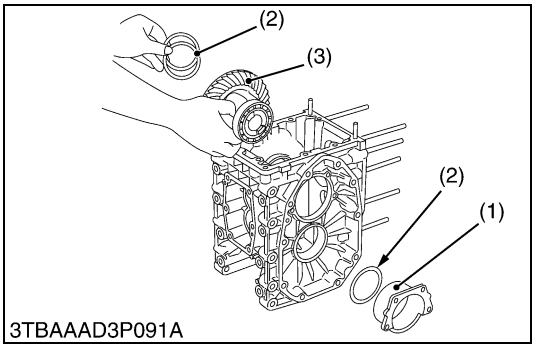

PTO Shaft

1. Remove the PTO cover mounting screws and remove the PTO cover assembly.

(When reassembling)

- Apply liquid gasket (Three Bond 1208D or equivalent) to joint face of differential gear case and PTO cover.

Tightening torque	PTO cover mounting screw	39.2 to 44.1 N·m 4.0 to 4.5 kgf·m 28.9 to 32.5 ft-lbs

W10252980

Differential Gear Assembly

1. Remove the bearing holder mounting screws and remove the bearing holder (1).
2. Take out the differential gear assembly (3).

(When reassembling)

- Install the differential gear assembly, noting the number of shims (2) in the differential case left side and bearing holder side.

Tightening torque	Differential gears bearing holder mounting screw	17.7 to 20.6 N·m 1.8 to 2.1 kgf·m 13.0 to 15.2 ft-lbs

(1) Bearing Holder
(2) Adjusting Shim
(3) Differential Gear Assembly

W10254060

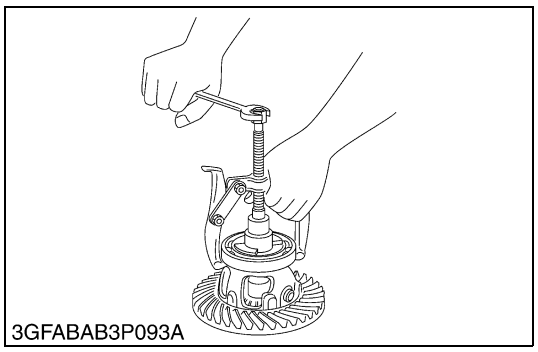
3GFABAB3P093A

Bearings

1. Remove the right and left bearings from the differential case.

W10255550

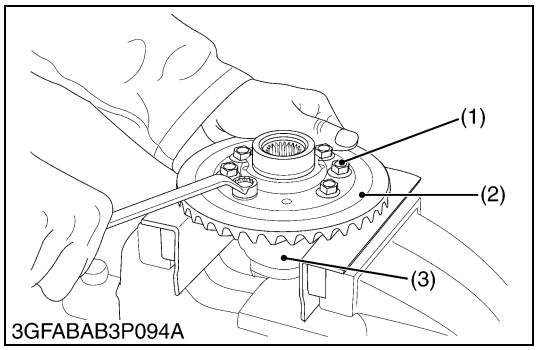

3GFABAB3P094A

Spiral Bevel Gear

1. Remove the spiral bevel gear UBS screws (1).
2. Remove the spiral bevel gear (2) from differential case (3).

(When reassembling)

- Apply liquid lock (Three Bond 1324B or its equivalent) to the spiral bevel gear UBS screws.

Tightening torque	Spiral bevel gear UBS screw	29.4 to 34.3 N·m 3.0 to 3.5 kgf·m 21.7 to 25.3 ft-lbs

(1) Spiral Bevel Gear UBS Screw
(2) Spiral Bevel Gear
(3) Differential Case

W10256050

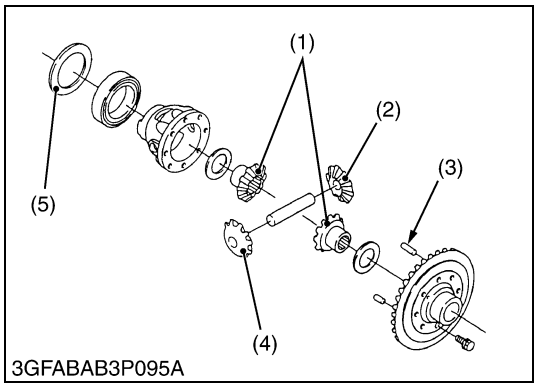

3GFABAB3P095A

Differential Side Gear and Differential Pinion

1. Put parting marks on the differential pinion (1) and the differential side gear (2).
2. Tap out the dowel pin (3).
3. Remove the differential pinion shaft.
4. Remove the differential pinion (4), differential side gear (2) and shim (5).

(When reassembling)

- Install the differential pinion and differential side gear, aligning the parting marks.

(1) Differential Pinion
(2) Differential Side Gear
(3) Dowel Pin
(4) Differential Pinion
(5) Shim

W10257540

6. SERVICING

[1] CLUTCH HOUSING

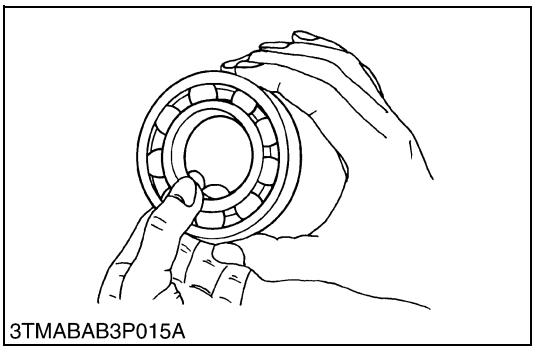
3TMABAB3P015A

Checking Bearing

1. Hold the inner race, and push and pull the outer race in all directions to check for wear and roughness.
2. Apply transmission fluid to the bearing, and hold the inner race. Then, turn the outer race to check rotation.
3. If there is any defect, replace it.

W10260490

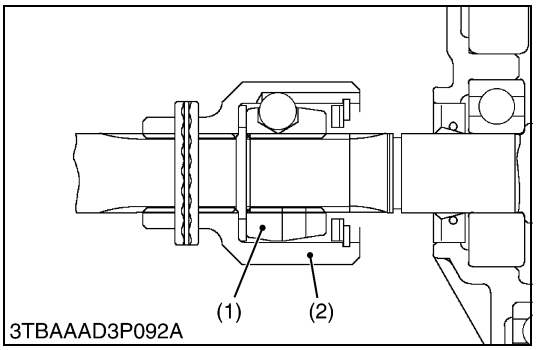

3TBAAAD3P092A

Checking Propeller Shaft Ball Coupling

1. Hold the ball coupling outer, and push and pull, and rotate the ball coupling inner in all directions to check for wear and roughness.
2. If there is any defect, replace it.

(When reassembling)

- Apply grease to the inner parts of ball coupling and splines of ball coupling inner.
- When replacing the ball coupling assembly, install the ball coupling inner (1) with balls so that its ball position inside of ball coupling outer (2) as shown in the figure.

(1) Inner, Coupling (2) Outer, Coupling

W10261250

[2] TRANSMISSION CASE

(1) Manual Transmission Model

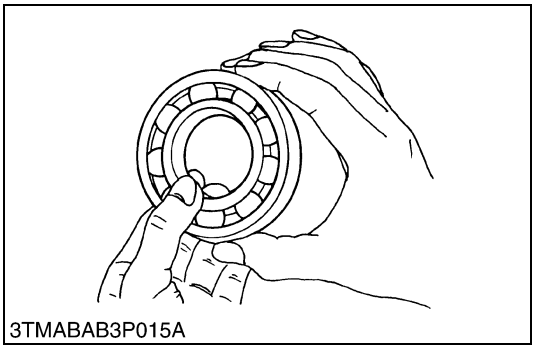
3TMABAB3P015A

Checking Bearing

1. Hold the inner race, and push and pull the outer race in all directions to check for wear and roughness.
2. Apply transmission fluid to the bearing, and hold the inner race. Then, turn the outer race to check rotation.
3. If there is any defect, replace it.

W10262970

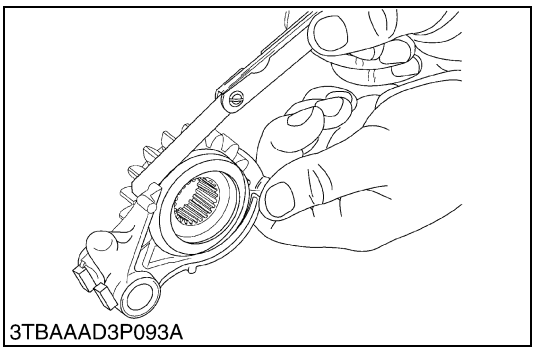
3TBAAAD3P093A

Clearance between Shift Fork and Shift Gear Groove

1. Insert the fork into the shift gear groove and measure the clearance with a feeler gauge.
2. If the clearance exceeds the allowable limit, replace it.

Clearance between shift fork and shift gear groove	Factory spec.	0.10 to 0.35 mm 0.004 to 0.014 in.
	Allowable limit	0.5 mm 0.020 in.

W10262760

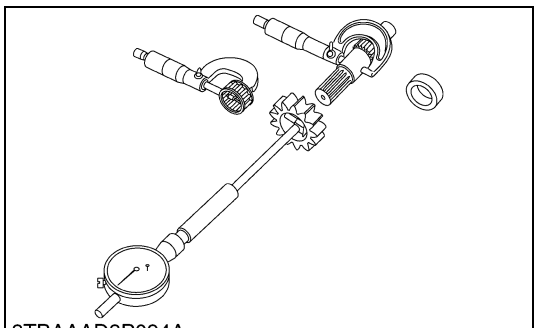
3TBAAAD3P094A

Clearance between Gear and Shaft

1. Measure the gear I.D. a cylinder gauge, and then shaft O.D. with an outside micrometer.
2. Measure the O.D. of two needles in the needle bearing with an outside micrometer.
3. Clearance is the difference between the gear I.D. and the sum of shaft O.D. and two needles O.D..
4. If the clearance exceeds the allowable limit, replace it.

Clearance between front wheel drive shaft and 16T-20T gear	Factory spec.	0.027 to 0.067 mm 0.00106 to 0.00264 in.
	Allowable limit	0.1 mm 0.004 in.
Front wheel drive shaft O.D.	Factory spec.	21.967 to 21.980 mm 0.86484 to 0.86535 in.
16T-20T gear I.D.	Factory spec.	28.007 to 28.021 mm 1.10264 to 1.10319 in.
Needle O.D.	Factory spec.	2.996 to 3.000 mm 0.11795 to 0.11811 in.

Clearance between 13T gear and 3rd shaft	Factory spec.	0.007 to 0.046 mm 0.00028 to 0.00181 in.
	Allowable limit	0.1 mm 0.004 in.
3rd shaft O.D.	Factory spec.	21.987 to 22.000 mm 0.86562 to 0.86614 in.
13T gear I.D.	Factory spec.	30.007 to 30.021 mm 1.18138 to 1.18193 in.
Needle O.D.	Factory spec.	3.994 to 4.000 mm 0.15724 to 0.15748 in.

Clearance between 11T gear, one-way clutch cam and mid-PTO shaft	Factory spec.	0.020 to 0.026 mm 0.00078 to 0.00102 in.
	Allowable limit	0.1 mm 0.004 in.
Mid-PTO shaft O.D.	Factory spec.	19.989 to 20.000 mm 0.78697 to 0.78740 in.
11T gear and one-way clutch cam I.D.	Factory spec.	24.007 to 24.020 mm 0.94516 to 0.94567 in.
Needle O.D.	Factory spec.	1.997 to 2.000 mm 0.07862 to 0.07874 in.

W10264560

(2) HST Model

(A) Hydrostatic Transmission

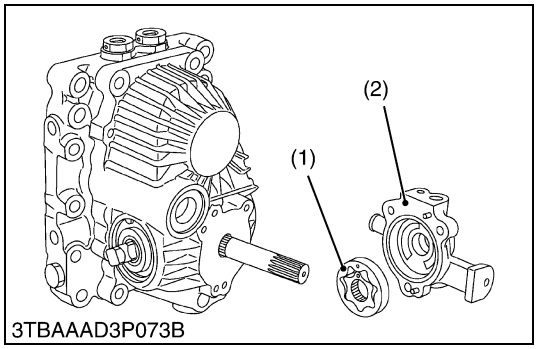

3TBAAAD3P073B

Charge Pump

1. Check the charge pump housing (2) and the gerotor assembly (1) for scratches and wear.
2. If scratch or worn, replace the charge pump complete assembly.

(1) Gerotor Assembly (2) Charge Pump Housing

W10269170

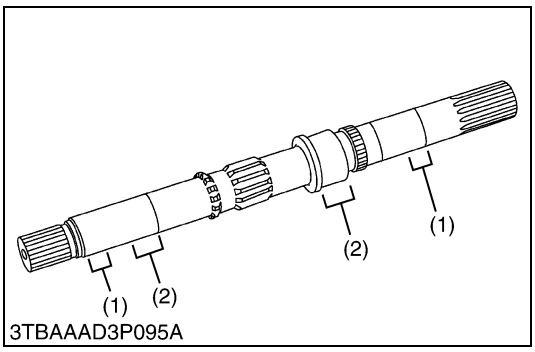

Input Shaft

1. Pull out the input shaft from the case.
2. Check the seal surface (1), the bearing surface (2) and the bearing.
3. If the shaft is rough or grooved, replace.
4. If the bearing is worn, replace.

(1) Seal Surface (2) Bearing Surface

W10270030

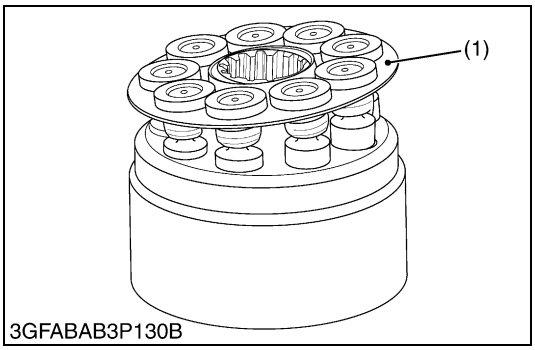

Cylinder Block Bore and Pistons

1. Lift all the pistons gently with the retainer plate (1).
2. Check the pistons for their free movement in the cylinder block bores.
3. If the piston or the cylinder block bore is scored, replace cylinder block assembly.

■ **IMPORTANT**

- **Do not interchange pistons between pump and motor cylinder block. Pistons and cylinder blocks are matched.**

Clearance between piston and bore	Factory spec.	0.02 mm 0.0008 in.
	Allowable limit	0.04 mm 0.0016 in.

(1) Retainer Plate

W10272130

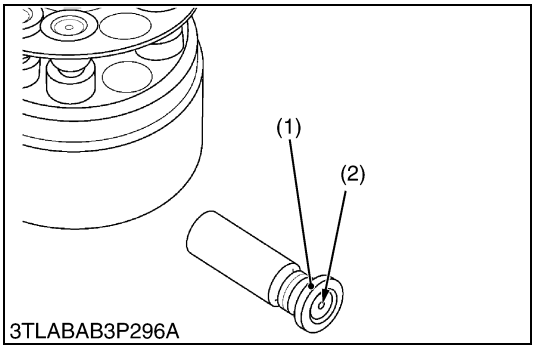

Piston Slipper and Retainer Plate

1. Check the slipper (1) for flatness.
2. If rounded, replace
3. Measure the thickness of piston slipper.
4. If the measurement is less than the allowable limit, replace.
5. Check the lubricant hole (2) for clogging.

■ **IMPORTANT**

- **Do not interchange pistons between pump and motor cylinder block. Pistons and cylinder blocks are matched.**

Thickness of slipper	Factory spec.	3.00 mm 0.118 in.
	Allowable limit	2.90 mm 0.114 in.

(1) Piston Slipper (2) Lubricant Hole

W10273650

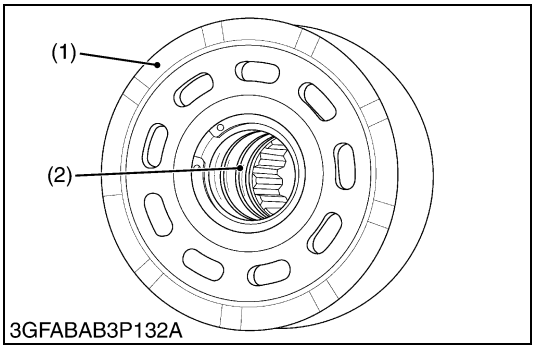

Cylinder Block Face

1. Check the polished face (1) of cylinder block for scoring.
2. If scored, replace cylinder block assembly.
3. Check the spring (2) for breakage.
4. If broken, replace cylinder block assembly.

(1) Polished Face (2) Spring

W10275750

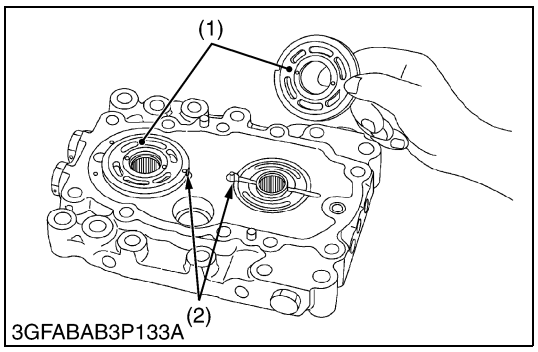

Valve Plate

1. Check the engagement of the valve plate (1) and the anchor pin (2).
2. Pushing the valve plate against the anchor pin, lift it to remove.
3. Check the valve plate for foreign particles.
4. Clean the valve plate and dry with compressed air.
5. Check the valve plate for scratches, wear and erosion. (Run a finger nail across the valve plate surface. If worn, it will be felt.)
6. If worn or scored, replace.

■ **NOTE**

- **After checking, coat them with hydrostatic transmission oil.**

(1) Valve Plate (2) Anchor Pin

W10276870

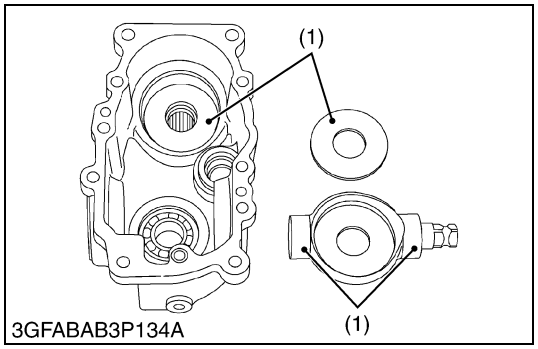

Thrust Plate and Swashplate

1. Check the thrust plate (1) for scratches and excessive wear.
2. If worn or scored, replace.
3. Check the bearing surface (2) of trunnion shaft (swashplate) for scratches and excessive wear.
4. If worn or scored, replace.

(1) Thrust Plate (2) Bearing Surface

W10279430

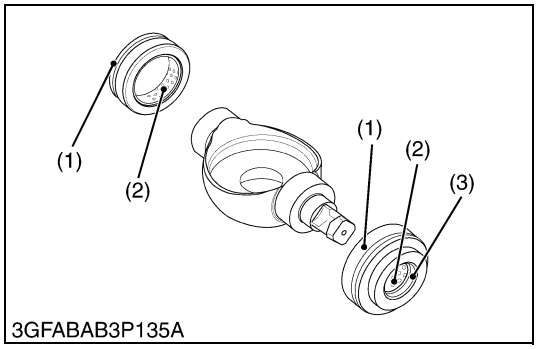

Trunnion Shaft Cover

1. Check the bearing (2) for scratches and excessive wear.
2. If worn or scored, replace.
3. Check the oil seal (3) and the O-rings (1) for damage.

■ **NOTE**

- **After checking, coat the bearings with hydrostatic transmission oil, and the oil seal lip and the O-rings (1) with grease.**

(1) O-ring (3) Oil Seal
(2) Bearing

W10280630

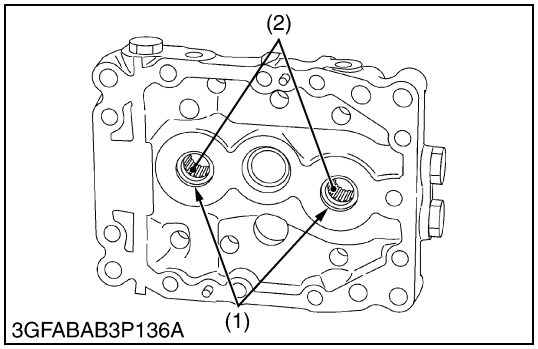

Oil Seals and Bearings for Shaft

1. Remove the internal snap ring and check the oil seals (1) for damage.
2. Check the bearings (2) for wear.
3. If the bearings are worn, replace.

■ **NOTE**

- **After checking, coat the bearing with hydrostatic transmission oil and the oil seal lip with grease.**

(1) Oil Seal (2) Needle Bearing

W10281850

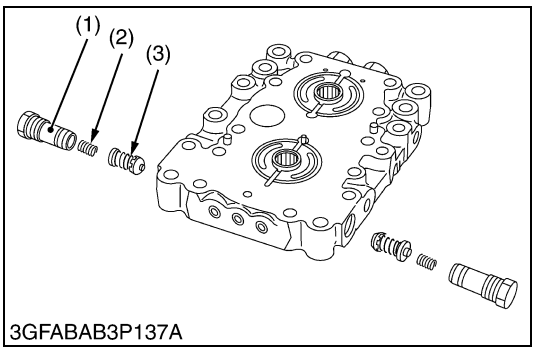

3GFABAB3P137A

Check and High Pressure Relief Valve

1. Check the valve plug (1) and valve (3) for scratches and damage.
2. Check the valve seat in the port block for damage.
3. Check the spring (2) for breakage and wear.
4. If anything unusual, replace the check and high pressure relief valve assembly.

Tightening torque	Valve plug	118 to 147 N·m 12.0 to 15.0 kgf·m 86.8 to 108.5 ft-lbs

(1) Valve Plug
(2) Spring
(3) Valve

W10283010

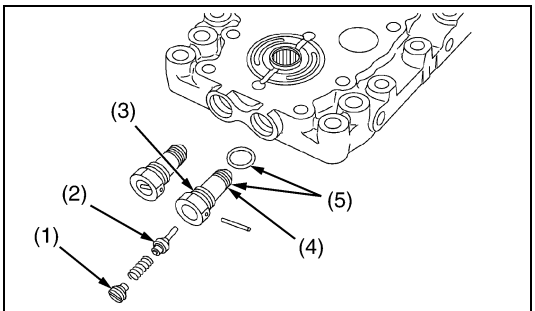

3TBAAAD3P097A

Neutral Valve

1. Check the holes of the valve body (3) and the neutral valve (2) for clogging.
2. If clogged, open hole with compressed air.
3. Check the O-rings (1), (5) and the backup ring (4) for scratches and damage.
4. Check the springs for breakage and wear.
5. If the valve surface is scored, replace.
6. If anything unusual, replace

■ **NOTE**

- **When reassembling, replace the O-rings and the backup rings.**

Tightening torque	Cap screw	58.5 to 68.6 N·m 6.0 to 7.0 kgf·m 43.4 to 50.6 ft-lbs

(1) O-ring
(2) Neutral Valve
(3) Valve Body
(4) Backup Ring
(5) O-ring

W10284530

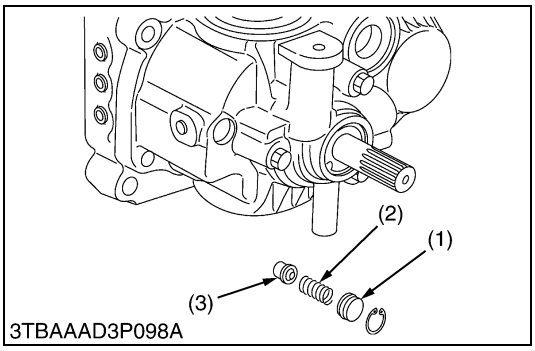

3TBAAAD3P098A

Charge Relief Valve

1. Check the spring (2) for breakage and wear.
2. If it unusual, replace.

(1) Valve Plug
(2) Spring
(3) Valve Poppet

W10286620

(B) Transmission Case

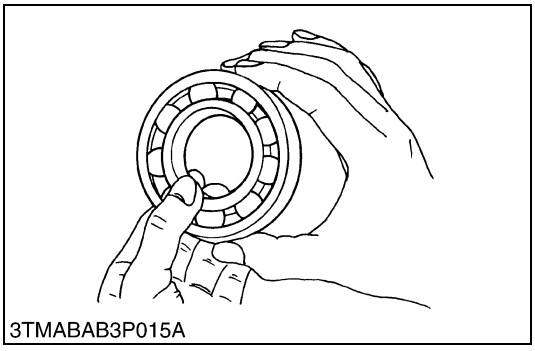
3TMABAB3P015A

Checking Bearing

1. Hold the inner race, and push and pull the outer race in all directions to check for wear and roughness.
2. Apply transmission fluid to the bearing, and hold the inner race. Then, turn the outer race to check rotation.
3. If there is any defect, replace it.

W10287850

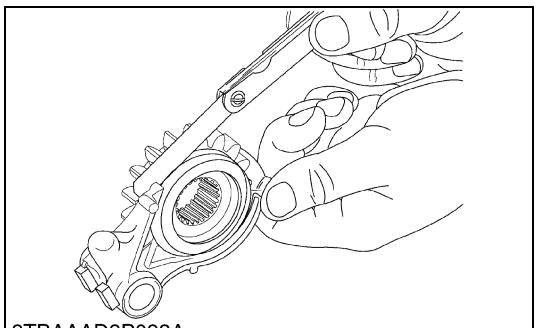
3TBAAAD3P093A

Clearance between Shift Fork and Shift Gear Groove

1. Insert the fork into the shift gear groove and measure the clearance with a feeler gauge.
2. If the clearance exceeds the allowable limit, replace it.

Clearance between shift fork and shift gear groove	Factory spec.	0.10 to 0.35 mm 0.004 to 0.014 in.
	Allowable limit	0.5 mm 0.020 in.

W10288520

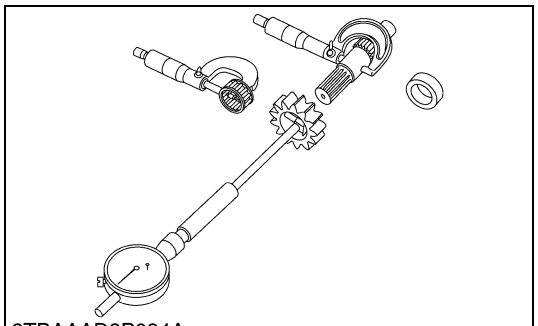
3TBAAAD3P094A

Clearance between 13T Gear and 3rd Shaft

1. Measure the 13T gear I.D. with an inside micrometer, and then 3rd shaft O.D. with an outside micrometer.
2. Measure the O.D. of two needles in the needle bearing with an outside micrometer.
3. Clearance is the difference between the gear I.D. and the sum of shaft O.D. and two needle O.D..
4. If the clearance exceeds the allowable limit, replace it.

Clearance between 13T gear and 3rd shaft	Factory spec.	0.007 to 0.046 mm 0.00028 to 0.00181 in.
	Allowable limit	0.1 mm 0.004 in.

3rd shaft O.D.	Factory spec.	21.987 to 22.000 mm 0.86562 to 0.86614 in.
13T gear I.D.	Factory spec.	30.007 to 30.021 mm 1.18138 to 1.18193 in.
Needle O.D.	Factory spec.	3.994 to 4.000 mm 0.15724 to 0.15748 in.

W10290240

[3] DIFFERENTIAL GEAR

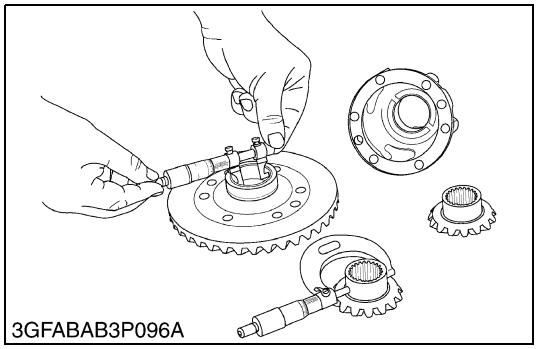
3GFABAB3P096A

Clearance between Differential Case (Spiral Bevel Gear) and Differential Side Gear

1. Measure the differential side gear boss O.D. with an outside micrometer.
2. Measure the differential case I.D. and the spiral bevel gear I.D. with an inside micrometer, and calculate the clearance.
3. If the clearance exceeds the allowable limit, replace faulty parts.

Clearance between differential case (spiral bevel gear) and differential side gear	Factory spec.	0.025 to 0.066 mm 0.00098 to 0.00260 in.
	Allowable limit	0.3 mm 0.012 in.

Differential case I.D.	Factory spec.	32.000 to 32.025 mm 1.25984 to 1.26082 in.
Spiral bevel gear I.D.	Factory spec.	32.000 to 32.025 mm 1.25984 to 1.26082 in.
Differential side gear O.D.	Factory spec.	31.959 to 31.975 mm 1.25823 to 1.25886 in.

W10292110

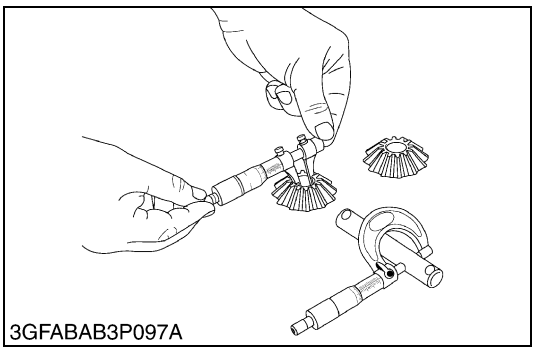
3GFABAB3P097A

Clearance between Differential Pinion Shaft and Differential Pinion

1. Measure the differential pinion shaft O.D. with an outside micrometer.
2. Measure the differential pinion I.D. with an inside micrometer, and calculate the clearance.
3. If the clearance exceeds the allowable limit, replace faulty parts.

Clearance between differential pinion shaft and differential pinion	Factory spec.	0.016 to 0.045 mm 0.00063 to 0.00177 in.
	Allowable limit	0.3 mm 0.012 in.

Differential pinion I.D.	Factory spec.	16.000 to 16.018 mm 0.62992 to 0.63063 in.
Differential pinion shaft O.D.	Factory spec.	15.973 to 15.984 mm 0.62886 to 0.62929 in.

W10293630

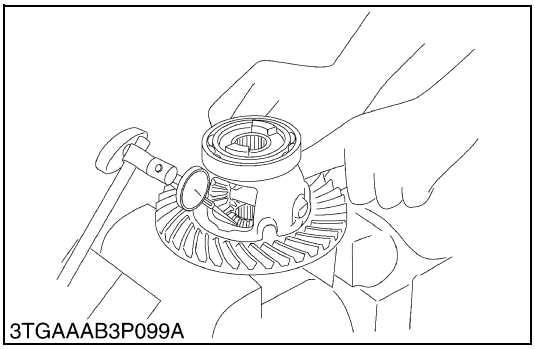
3TGAAAB3P099A

Backlash between Differential Pinion and Differential Side Gear

1. Secure the differential case with a vise.
2. Set the dial indicator (lever type) with its finger on the tooth of the differential side gear.
3. Press differential pinion and side gear against the differential case.
4. Hold the differential pinion and move the differential side gear to measure the backlash.
5. If the backlash exceeds the allowable limit, adjust with differential side gear shims.

Backlash between differential pinion and differential side gear	Factory spec.	0.1 to 0.3 mm 0.004 to 0.012 in.
	Allowable limit	0.4 mm 0.016 in.

■ **NOTE**

- **Thickness of shims :**
  0.8 mm (0.0315 in.), 1.0 mm (0.0394 in.), 1.2 mm (0.0472 in.)

W10296530

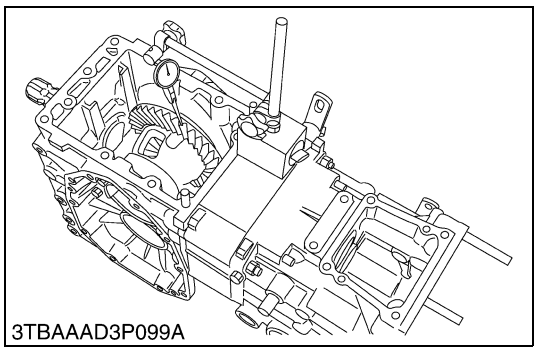
3TBAAAD3P099A

Backlash between Spiral Bevel Pinion and Spiral Bevel Gear

1. Set the dial indicator (lever type) with its finger on the end of spiral bevel pinion (4).
2. Move the spiral bevel pinion back and forth to each end and measure the side clearance.
3. If the side clearance exceeds the factory specifications, adjust with the shims (3) at front end of spiral bevel pinion.
4. Set the dial indicator (lever type) with its finger on the tooth surface of bevel gear.
5. Measure the backlash by fixing the spiral bevel pinion (4) and moving bevel gear (2) by hand.
6. If the backlash exceeds the factory specifications, adjust with the shims (1), (5) at bearing holder (6) and differential case.
7. Adjust the backlash properly by repeating the above procedure.

(When adjusting)

Side clearance of spiral bevel pinion	Factory spec.	Less than 0.15 mm 0.0059 in.
Backlash between spiral bevel pinion and spiral bevel gear	Factory spec.	0.10 to 0.20 mm 0.0039 to 0.0079 in.

(Reference)

- Thickness of shims (1), (5) :
  0.2 mm (0.008 in.), 0.5 mm (0.020 in.)
- Thickness of shims (3) :
  0.2 mm (0.008 in.), 1,4 mm (0.055 in.), 1.8 mm (0.071 in.)

W10299330

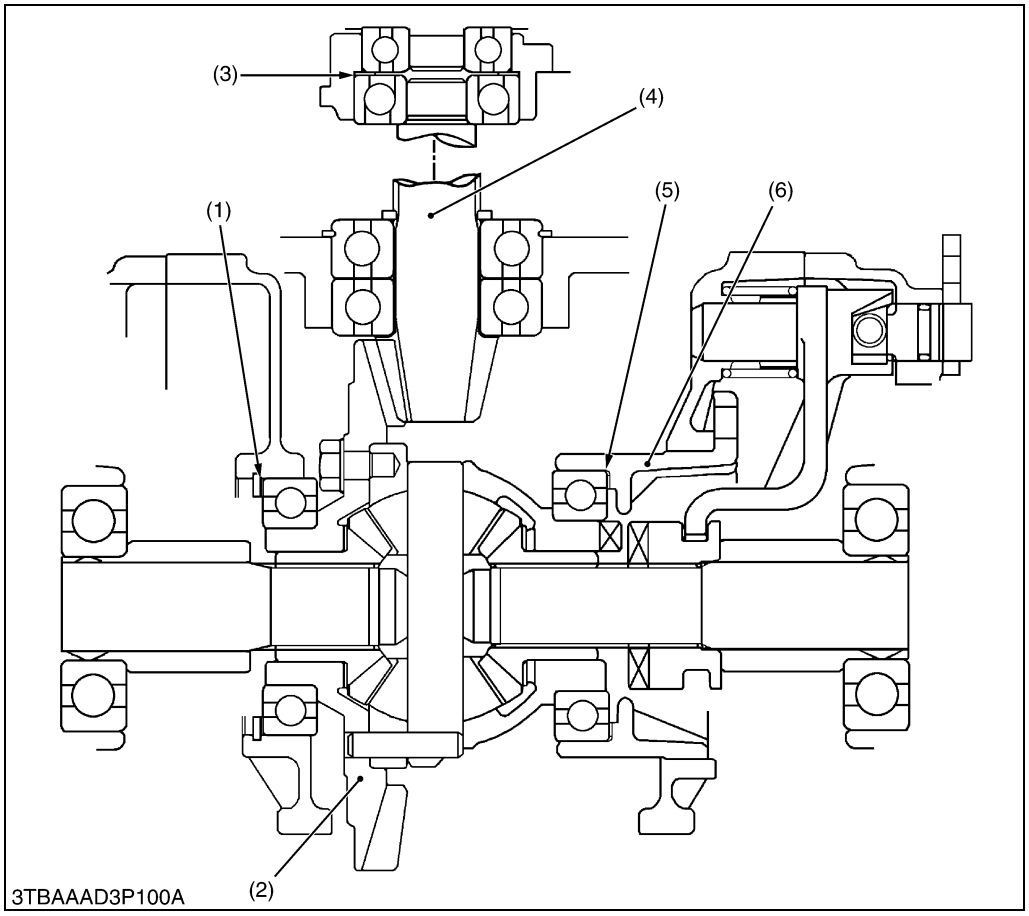

3TBAAAD3P100A

(1) Shim
(2) Bevel Gear
(3) Shim
(4) Spiral Bevel Pinion
(5) Shim
(6) Bearing Holder

W10301360

4 REAR AXLE

MECHANISM

CONTENTS

1. FEATURES 4-M1

1. FEATURES

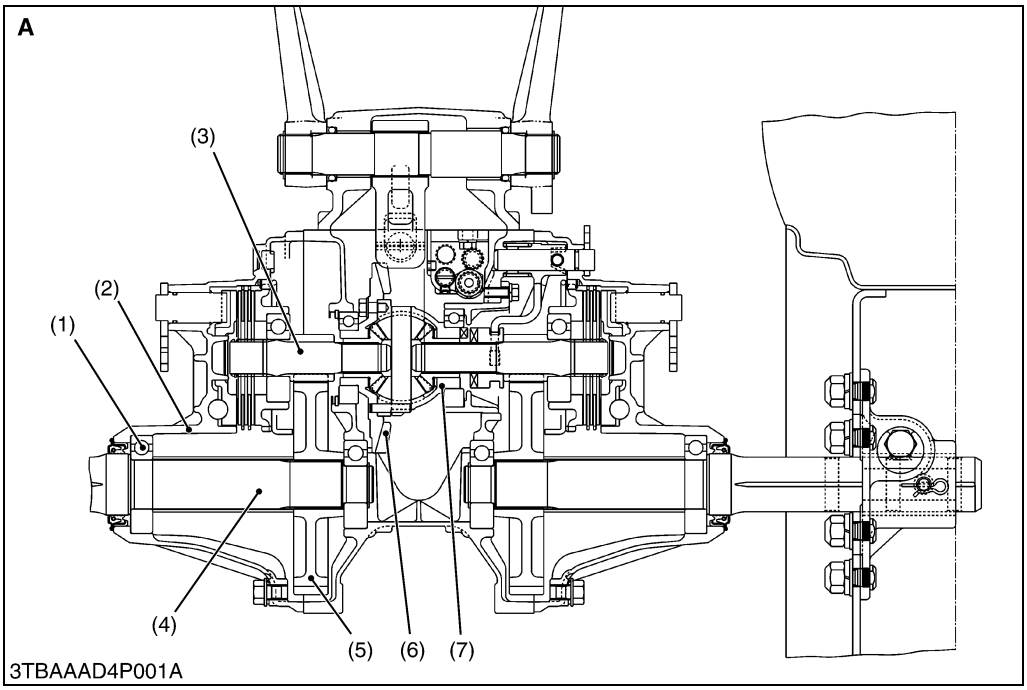

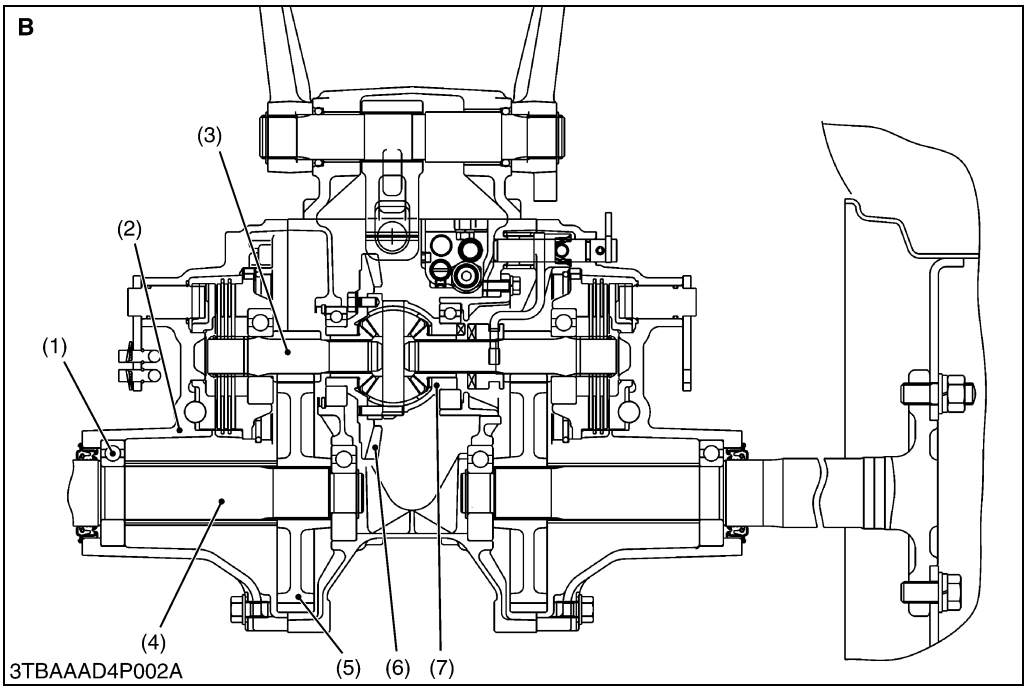

A : B1710, B2110, B2410
B : B2710
(1) Ball Bearing
(2) Rear Axle Case
(3) Differential Gear Shaft
(4) Rear Axle
(5) Spur Gear
(6) Spiral Bevel Gear
(7) Differential Gear

W10126560

The rear axles are the semifloating type with ball bearings (1) between the rear axle (4) and the rear axle case (2), which supports the rear wheel load as well as transmitting power to the rear wheels.

The differential gears (7) automatically controls the revolution of right and left wheels when the rear wheels encounter unequal road resistance during turning.

SERVICING

CONTENTS

1. SERVICING SPECIFICATIONS 4-S1
2. TIGHTENING TORQUES 4-S2
3. DISASSEMBLING AND ASSEMBLING 4-S3
   [1] SEPARATING REAR AXLE CASE 4-S3
      (1) B1710, B2110, B2410 .....4-S3
      (2) B2710.....4-S6
   [2] DISASSEMBLING REAR AXLE CASE.....4-S8

1. SERVICING SPECIFICATIONS

Bi-Speed Turn Model

Item		Factory Specification	Allowable Limit
Bi-speed Turn Cable Outer (Bi-speed Turn Cable Support Side)	Distance **B** [B2110, B2410] [B2710]	19 mm 0.75 in. 16 mm 0.63 in.	– –

W10138740

2. TIGHTENING TORQUES

Tightening torques of screws, bolts and nuts on the table below are especially specified.
(For general use screws, bolts and nuts : See page G-9.)

Item	N·m	kgf·m	ft-lbs
(B1710, B2110, B2410)			
Rear wheel hub mounting nut	108 to 125	11.0 to 12.8	79.6 to 92.6
Cotter setting bolt and nut	123 to 147	12.6 to 15.0	91.1 to 108.5
Rear axle case mounting screw	39.2 to 44.1	4.0 to 4.5	28.9 to 32.5
(B2710)			
Rear wheel mounting screw and nut	108 to 125	11.0 to 12.8	79.6 to 92.6
Rear axle case mounting screw	39.2 to 44.1	4.0 to 4.5	28.9 to 32.5

W10127360

3. DISASSEMBLING AND ASSEMBLING

[1] SEPARATING REAR AXLE CASE

(1) B1710, B2110, B2410

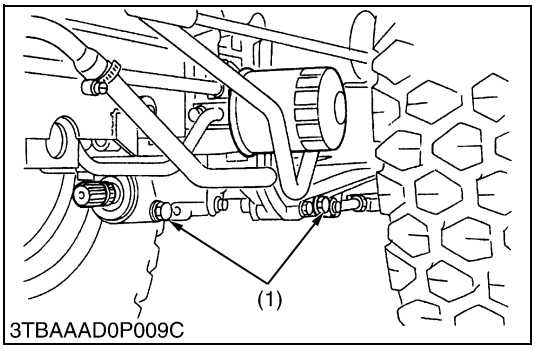

3TBAAAD0P009C

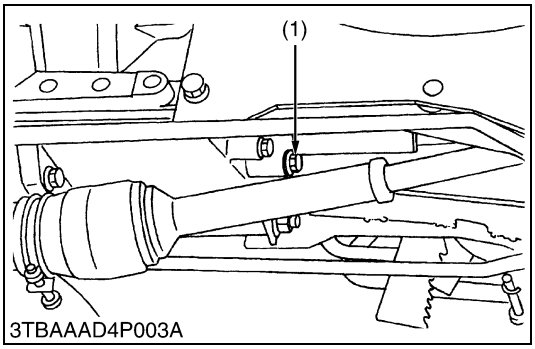

3TBAAAD4P003A

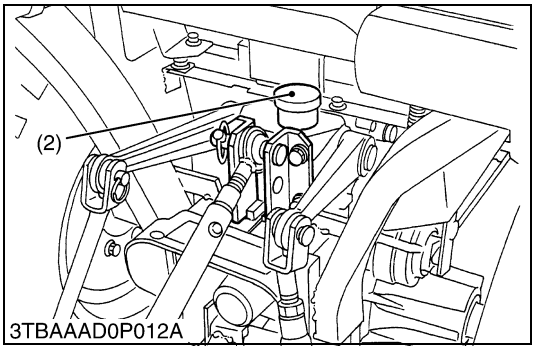

3TBAAAD0P012A

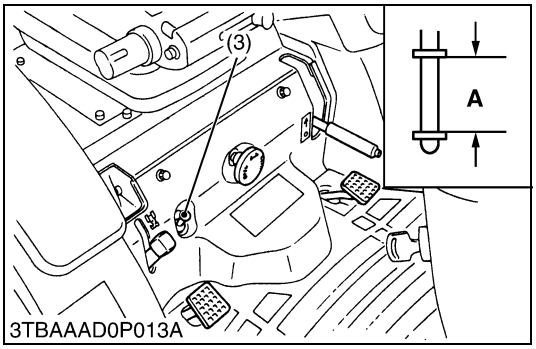

3TBAAAD0P013A

Draining Transmission Fluid

CAUTION

- **Be sure to stop the engine before checking and changing the transmission fluid.**

1. Place oil pan under the tractor.
2. Remove the drain plugs (1) at the bottom of the rear axle case and oil tank.
3. Drain the transmission fluid and reinstall the drain plugs.

(When refilling)

- Fill new oil from filling port after removing the filling plugs (2) up to the upper notch on the dipstick (3).
- After running the engine for few minutes, stop it and check the oil level again, if low, add oil prescribed level.

■ **IMPORTANT**

- **Use only multi-grade transmission oil. Use of other oils may damage the transmission or hydraulic system.**
  Refer to "LUBRICANTS, FUEL AND COOLANT" (See page G-8).
- **Never work the tractor immediately after changing the transmission oil. Keeping the engine at medium speed for a few minutes to prevents damage to the transmission.**
- **Do not mix different blands oil together.**

Transmission fluid capacity	B1710D B2110D B2110DB B2410D B2410DB	11.5 L 3.04 U.S.gals. 2.53 Imp.gals.
	B2110HDB B2410HDB	12.5 L 3.30 U.S.gals. 2.75 Imp.gals.

(1) Drain Plug
(2) Filling Plug
(3) Dipstick

A : Oil level is acceptable within this range

W10108570

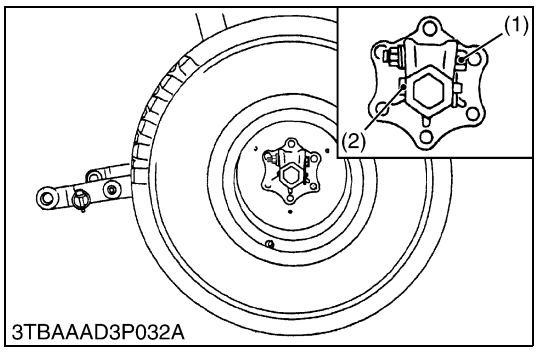

Rear Wheel

1. Place a jack under the transmission case.
2. Loosen the rear wheel cotter (1) setting bolt and nut.
3. Take out the wheel hub pin (2).
4. Take out the rear wheel and support the rear axles by stands.

■ **IMPORTANT**

- **When re-fitting or adjusting a wheel, tighten the bolts to the following torques then recheck after driving the tractor 200 m (200 yards) and there after daily check service.**

(When reassembling)

Tightening torque	Rear wheel cotter setting bolt and nut	123 to 147 N·m 12.6 to 15.0 kgf·m 91.1 to 108.5 ft-lbs
	Rear wheel hub mounting nut	108 to 125 N·m 11.0 to 12.8 kgf·m 79.6 to 92.6 ft-lbs

(1) Cotter
(2) Wheel Hub Pin

W10111510

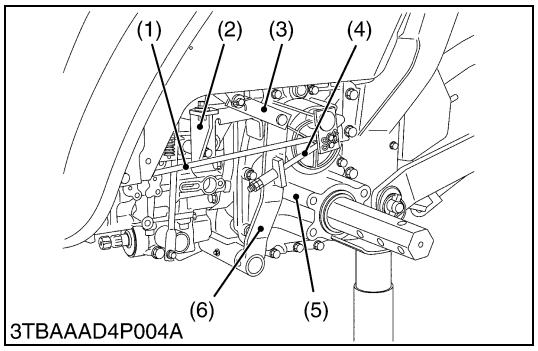

Rear Axle Case (Left Hand Side)

1. Remove the double nuts and remove the parking brake rod LH (4).
2. Remove the brake rod LH (1).
3. Disconnect the parking brake arm (6) and parking brake lever plate (3), and then remove the parking brake arm (6).
4. Remove the parking brake stay (2), parking brake lever plate (3) and parking brake lever as a unit.
5. Remove the rear axle case mounting screw.
6. Separate the rear axle case (5) from the differential case.

(When reassembling)

- Apply liquid gasket (Three Bond 1208D or equivalent) to joint face of the rear axle case and differential gear case after eliminating the water, oil and stuck liquid gasket.
- Be sure to adjust the parking brake lever (See page 5-S4).

Tightening torque	Rear axle case mounting screw	39.2 to 44.1 N·m 4.0 to 4.5 kgf·m 28.9 to 32.5 ft-lbs

(1) Brake Rod LH
(2) Parking Brake Lever Stay
(3) Parking Brake Lever Plate
(4) Parking Brake Rod
(5) Rear Axle Case
(6) Parking Brake Arm

W10114310

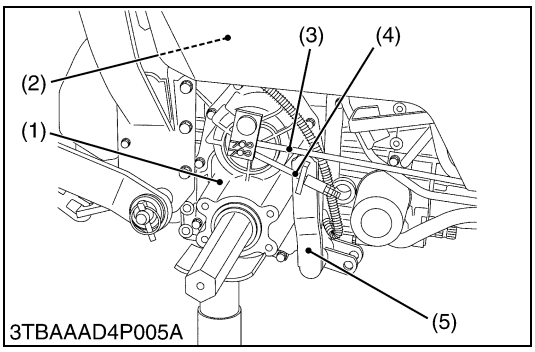

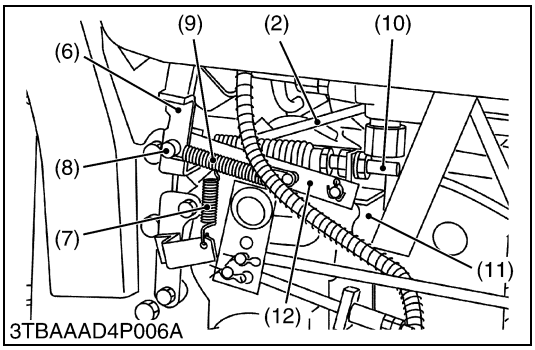

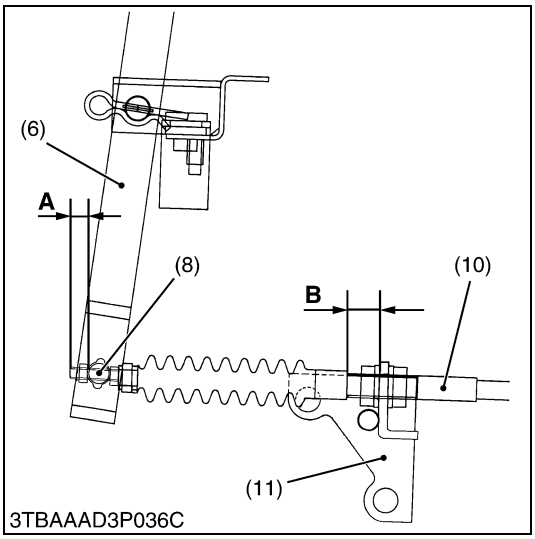

Rear Axle Case (Right Hand Side)

1. Remove the double nuts and remove the parking brake rod RH (4).
2. Remove the brake rod RH (3).
3. Remove the parking brake arm set pin and draw out the parking brake shaft (5).
4. Loosen the lock nuts and remove the bi-speed turn cable (10) from cable support (11). (Bi-speed turn model)

■ **NOTE**

- **Measure and note the distance A, before disconnecting the bi-speed turn cable.**

5. Remove the springs (7), (9) and lever holding plate (12) with cable support (11). (Bi-speed turn model)
6. Disconnect the differential lock rod (2).
7. Remove the rear axle case mounting screw.
8. Separate the rear axle case (1) from the differential case.

(When reassembling)

- Apply liquid gasket (Three Bond 1208D or equivalent) to joint face of the rear axle case and differential gear case after eliminating the water, oil and stuck liquid gasket.
- When reassembling the bi-speed turn cable (10), make sure to set the distance **A** and **B**.
- Be sure to adjust the parking brake lever (See page 5-S4).

Tightening torque	Rear axle case mounting screws	39.2 to 44.1 N·m 4.0 to 4.5 kgf·m 28.9 to 32.5 ft-lbs

Distance **A**	Reference value	8 mm 0.31 in.

Distance **B**	Factory spec.	19 mm 0.75 in.

(1) Rear Axle Case RH
(2) Differential Lock Rod
(3) Brake Rod RH
(4) Parking Brake Rod RH
(5) Parking Brake Arm Shaft
(6) Bi-speed Turn Lever
(7) Spring
(8) Bi-speed Turn Lever Rod
(9) Spring
(10) Bi-speed Turn Cable
(11) Cable Support
(12) Lever Holding Plate

W10117880

(2) B2710

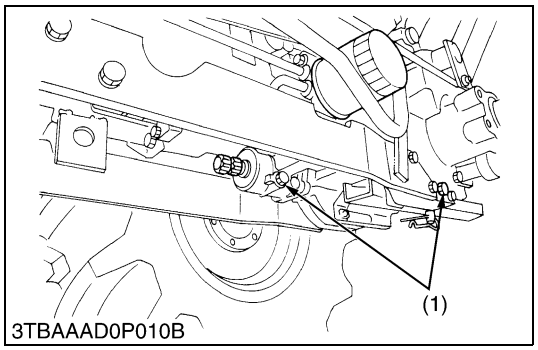

3TBAAAD0P010B

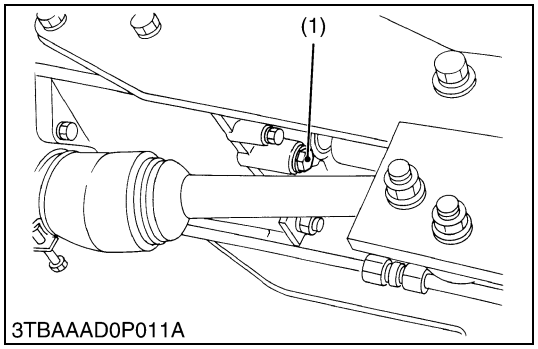

3TBAAAD0P011A

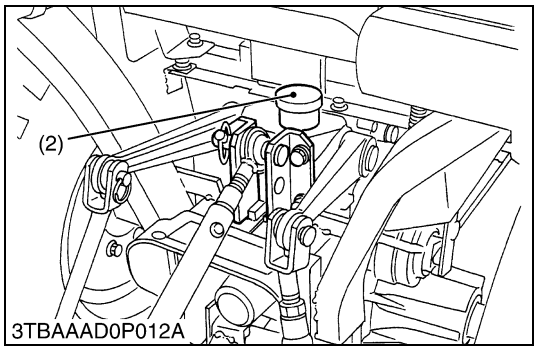

3TBAAAD0P012A

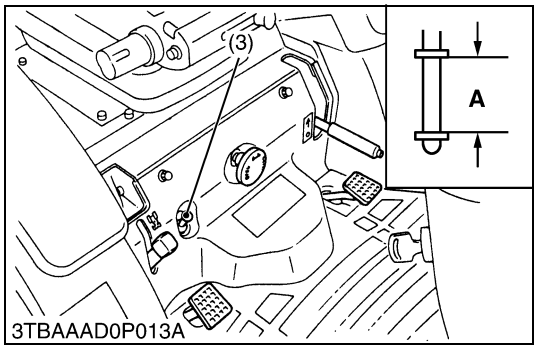

3TBAAAD0P013A

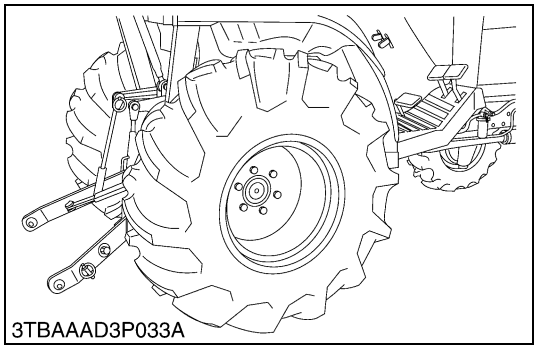
3TBAAAD3P033A

Draining Transmission Fluid

CAUTION

- **Be sure to stop the engine before checking and changing the transmission fluid.**

1. Place oil pan under the tractor.
2. Remove the drain plugs (1) at the bottom of the rear axle case and oil tank.
3. Drain the transmission fluid and reinstall the drain plugs.

(When refilling)

- Fill new oil from filling port after removing the filling plugs (2) up to the upper notch on the dipstick (3).
- After running the engine for few minutes, stop it and check the oil level again, if low, add oil prescribed level.

■ **IMPORTANT**

- **Use only multi-grade transmission oil. Use of other oils may damage the transmission or hydraulic system.**
  Refer to "LUBRICANTS, FUEL AND COOLANT" (See page G-8).
- **Never work the tractor immediately after changing the transmission oil. Keeping the engine at medium speed for a few minutes to prevents damage to the transmission.**
- **Do not mix different blands oil together.**

Transmission fluid capacity	15.5 L 4.10 U.S.gals. 3.41 Imp.gals.

(1) Drain Plug
(2) Filling Plug
(3) Dipstick

a : Oil level is acceptable within this range

W10123640

Rear Wheels

1. Place hydraulic jack under the main frame rear side and jack up the tractor.
2. Remove the tires.
3. After removing the tires, support the rear axles by stands.

(When reassembling)

Tightening torque	Rear wheel mounting screw and nut	108 to 125 N·m 11.0 to 12.8 kgf·m 79.6 to 92.6 ft-lbs

W10129120

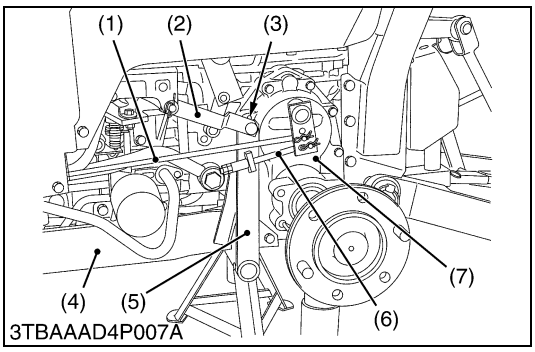

Rear Axle Case (Left Hand Side)

1. Remove the brake rod LH (1).
2. Remove the snap pin (3) and disconnect the parking brake lever plate (2) and parking brake arm (5).
3. Remove the parking brake rod LH (6) and then remove the parking brake arm (5).
4. Remove the sub frame LH (4).
5. Remove the rear axle case LH (7).

(When reassembling)

- Apply liquid gasket (Three Bond 1208D or equivalent) to joint face of the rear axle case and differential gear case after eliminating the water, oil and stuck liquid gasket.
- Be sure to adjust the parking brake lever. (See page 5-S4.)

Tightening torque	Rear axle case mounting screw	39.2 to 44.1 N·m 4.0 to 4.5 kgf·m 28.9 to 32.5 ft-lbs

(1) Brake Rod LH
(2) Parking Brake Lever Plate
(3) Snap Pin
(4) Sub Frame LH
(5) Parking brake Arm
(6) Parking Brake Rod LH
(7) Rear Axle Case

W10130520

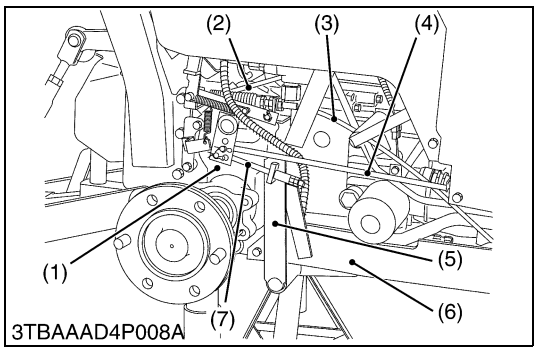

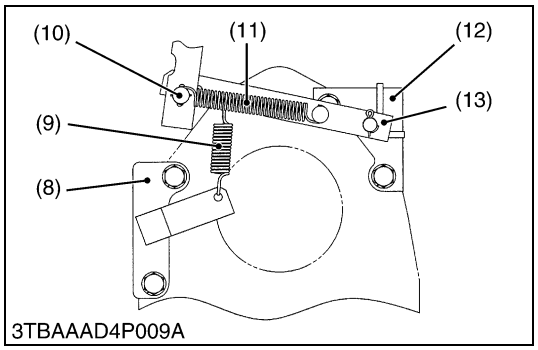

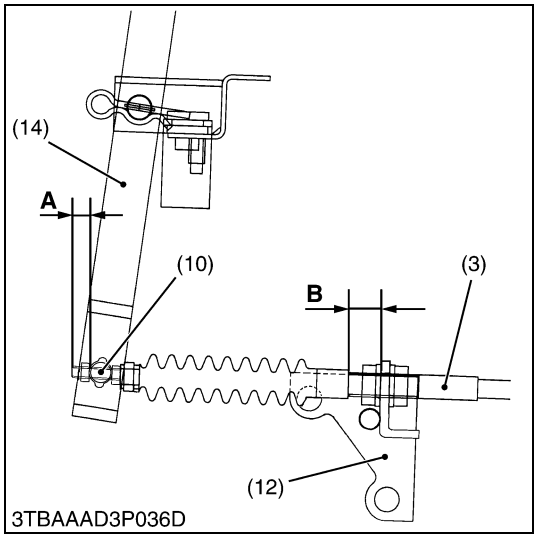

Rear Axle Case (Right Hand Side)

1. Remove the brake rod RH (4).
2. Remove the parking brake rod RH (7) and then draw out the parking brake shaft (5).
3. Loosen the lock nuts and remove the bi-speed turn cable (3) from cable support (12).

■ **NOTE**

- **Measure and note the distance A, before disconnecting the bi-speed turn cable.**

4. Remove the spring (9), (11) and lever holding plate (13) with cable support (12).
5. Disconnect the differential lock rod (2).
6. Remove the sub frame RH (6).
7. Remove the rear axle case mounting screws.
8. Separate the rear axle case (1) from the differential case.

(When reassembling)

- Apply liquid gasket (Three Bond 1208D or equivalent) to joint face of the rear axle case and differential gear case after eliminating the water, oil and stuck liquid gasket.
- When reassembling the bi-speed turn cable (3), make sure to set the distance **A** and **B**.
- Be sure to adjust the parking brake lever. (See page 5-S4.)

Tightening torque	Rear axle case mounting screws	39.2 to 44.1 N·m 4.0 to 4.5 kgf·m 28.9 to 32.5 ft-lbs

Distance **A**	Reference value	8 mm 0.31 in.

Distance **B**	Factory spec.	16 mm 0.63 in.

(1) Rear Axle Case RH
(2) Differential Lock Rod
(3) Bi-speed Turn Cable
(4) Brake Rod RH
(5) Parking Brake Arm Shaft
(6) Sub Frame RH
(7) Parking Brake Rod RH
(8) Bracket
(9) Spring
(10) Bi-speed Turn Lever Rod
(11) Spring
(12) Cable Support
(13) Lever Holding Plate
(14) Bi-speed Turn Lever

W10134730

[2] DISASSEMBLING REAR AXLE CASE

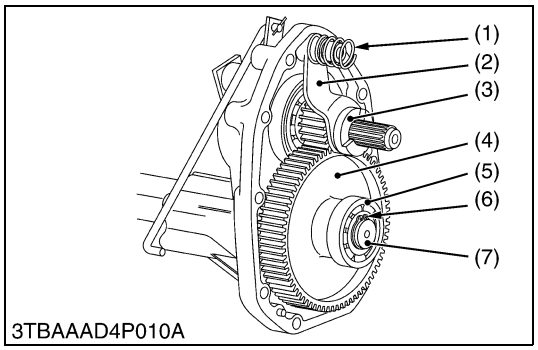

Differential Lock Shift Fork, Differential Lock Clutch (Right Side Only), 57T Gear and Rear Axle

1. Remove the spring (1).
2. Draw out the differential lock shift fork (2) and differential lock clutch (3).
3. Remove the external snap ring (6) and remove the bearing (5).
4. Draw out the 57T gear (4) from the rear axle (7).
5. Tap out the rear axle (7) to the outside of the rear axle case.

(1) Spring
(2) Differential Lock Shift Fork
(3) Differential Lock Clutch
(4) 57T Gear
(5) Bearing
(6) External Snap Ring
(7) Rear Axle

W10140980

5 BRAKES

MECHANISM

CONTENTS

1. FEATURES 5-M1
2. OPERATION 5-M2

1. FEATURES

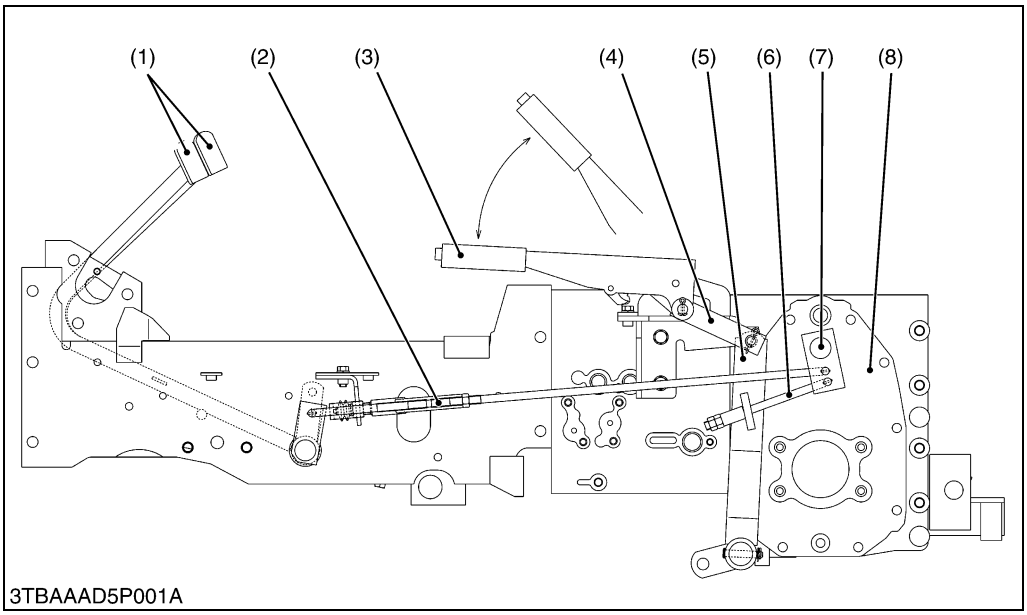

(1) Brake Pedal
(2) Brake Rod
(3) Parking Brake Lever
(4) Parking Brake Lever Plate
(5) Parking Brake Arm
(6) Parking Brake Rod
(7) Brake Cam Lever
(8) Rear Axle Case

W10131880

Independent mechanical wet disc brakes are used for the right and left travelling brakes. They are operated by the brake pedals through the mechanical linkages and provide stable braking and require little adjustment.

The parking brake is a mechanism type which is designed to actuate the travelling brakes through the parking brake linkages. Pulling the parking brake lever (3) results in the same state as the obtained when the brake pedals are pressed.

■ **Features of Wet Disc Brakes**

1. Reduced disc wear

Although wet discs are worn by approx. several tens of microns depending on the accuracy of parts during the initial contact in initial period of 50 hours or so, almost no wear occurs afterward. This means that very little brake adjustments are required.

2. Stable braking

Since the brake discs are immersed in transmission oil, **Fade*** is rarely caused even after repeated braking and a stable braking force is obtained.

3. Pedal stroke does not change under influence of heat

Unlike internal expanding type brakes, the drum-to-shoe clearance of the wet disc brake does not increase due to thermal expansion and the increased pedal stroke does not result. Thus, the wet disc brake provides a constant pedal stroke.

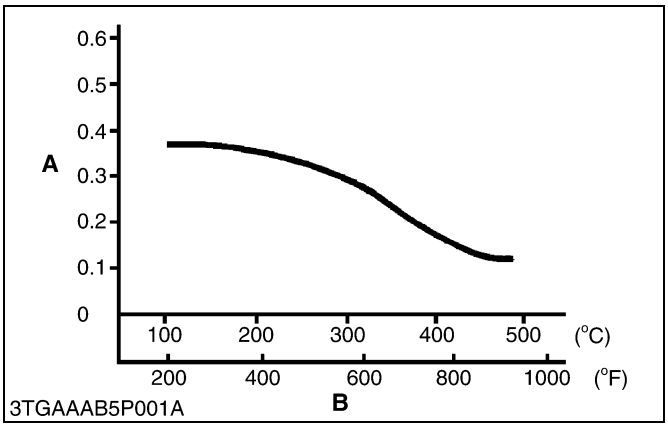

*** Fade**

Fade is a phenomenon of braking force loss caused by the heat generated in repeated braking. Generally, the friction coefficient of brake disc tends to lower and the braking force reduces with the rise of the temperature of the brake disc.

(Reference)

- Relationship between temperature and friction coefficient of brake disc.

A : Friction Coefficient (μ) **B : Temperature**

W10128310

2. OPERATION

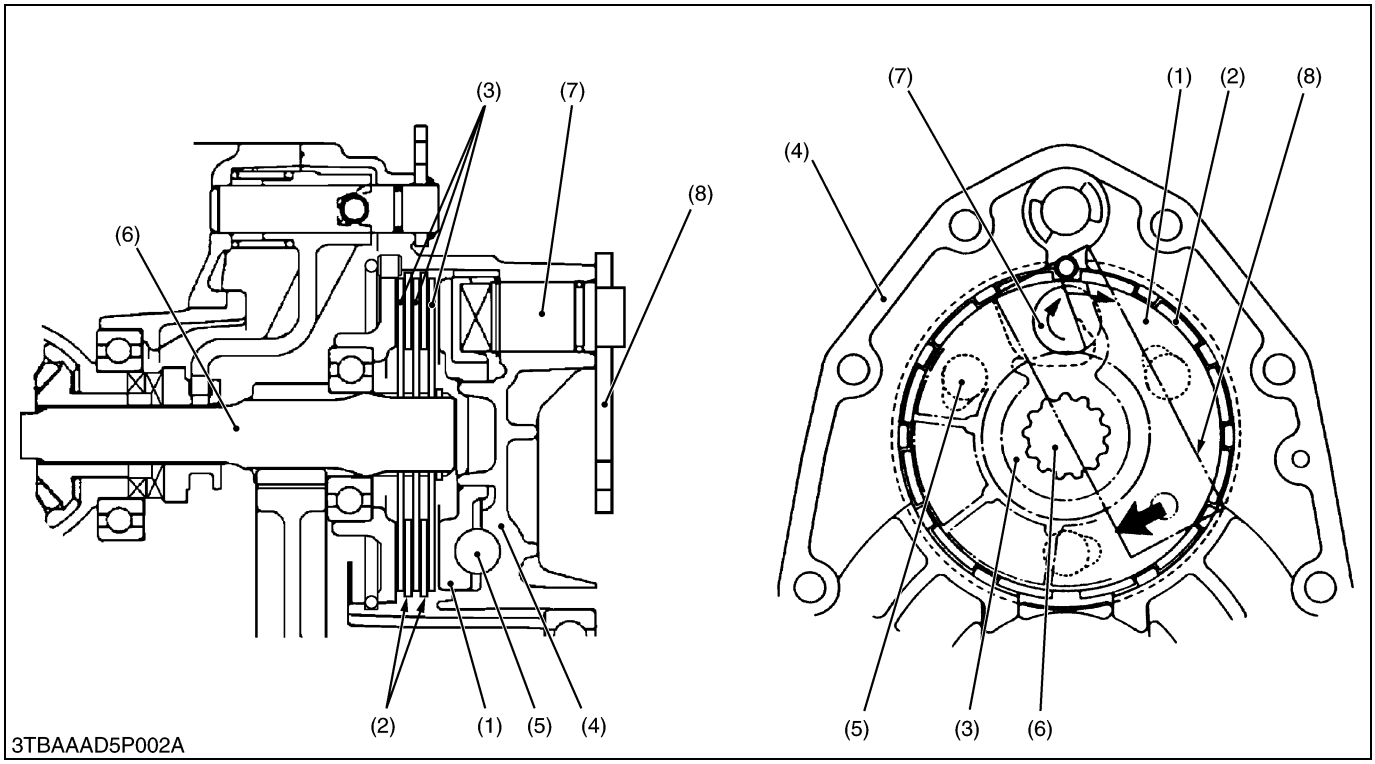

(1) Cam Plate
(2) Friction Plate
(3) Brake Disc
(4) Rear Axle Case
(5) Steel Ball
(6) Brake Shaft (Differential Gear Shaft)
(7) Brake Cam
(8) Brake Cam Lever

The brake body incorporated in the rear axle case (4) filled with transmission oil and is designed to brake when the brake disc (3) splined with the differential gear shaft (6) is pressed against the cam plate (1) by means of the cam mechanism incorporating steel balls (5).

For greater braking force, three brake discs are provided at the right and left sides respectively, and the friction plate (2) fixed to the rear axle case is arranged between the brake discs.

■ **During Braking**

When the brake pedal is pressed, the linkage causes the brake cam lever (8) and brake cam (7) to turn into the direction of arrow shown in the above figure.

Therefore, the cam plate (1) also moves the direction of arrow. At this time, since the cam plate (1) rides on the steel balls (5) set in the grooves of the rare axle case to press the brake disc (3), the differential gear shaft (6) is braked by the frictional force generated by the cam plate (1) and brake disc (3).

SERVICING

CONTENTS

1. TROUBLESHOOTING 5-S1
2. SERVICING SPECIFICATIONS 5-S2
3. CHECKING, DISASSEMBLING AND SERVICING.....5-S3
   [1] BRAKE PEDAL AND PARKING BRAKE 5-S3
      (1) Checking and Adjusting 5-S3
      (2) Disassembling and Assembling 5-S5
      (3) Servicing 5-S6
   [2] BRAKE ASSEMBLY.....5-S6
      (1) Disassembling and Assembling 5-S6
      (2) Servicing 5-S7

1. TROUBLESHOOTING

Symptom	Probable Cause	Solution	Reference Page
Uneven Braking Force	• Brake pedal free travel unevenly adjusted • Brake disc worn • Cam plate warped	Adjust Replace Replace	5-S3 5-S7 5-S7
Brake Drags	• Brake pedal free travel too small • Ball holes of cam plate for uneven wear • Brake pedal return spring weaken or broken • Brake cam rusted	Adjust Replace Replace Repair	5-S3 5-S7 5-S5 5-S7
Poor Braking Force	• Brake pedal free travel excessive • Brake disc worn • Cam plate warped • Brake cam or lever damaged • Transmission fluid improper	Adjust Replace Replace Replace Change	5-S3 5-S7 5-S7 5-S7 G-8

W10143220

2. SERVICING SPECIFICATIONS

Item		Factory Specification	Allowable Limit
Brake Pedal	Free Travel	30 to 40 mm 1.18 to 1.57 in.	–
Parking Brake Lever	Travel	3 to 5 notches	–
Pedal Shaft to Pedal Shaft Bushing	Clearance	0 to 0.165 mm 0 to 0.00649 in.	1.0 mm 0.039 in.
Pedal Shaft	O.D.	24.916 to 25.030 mm 0.98094 to 0.98543 in.	–
Bushing	I.D.	25.030 to 25.081 mm 0.98543 to 0.98744 in.	–
Cam Plate and Bearing Holder	Flatness	–	0.3 mm 0.012 in.
Cam Plate and Ball	Height	22.89 to 22.99 mm 0.9012 to 0.9051 in.	22.40 mm 0.8819 in.
Brake Disc	Thickness	3.3 to 3.5 mm 0.130 to 0.138 in.	3.0 mm 0.118 in.
Friction Plate	Thickness	1.92 to 2.08 mm 0.0756 to 0.0819 in.	1.52 mm 0.0598 in.

W10138740

3. CHECKING, DISASSEMBLING AND SERVICING

[1] BRAKE PEDAL AND PARKING BRAKE

(1) Checking and Adjusting

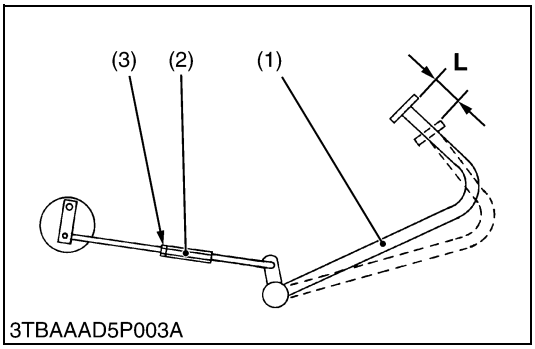

Adjusting Brake Pedal Free Travel

CAUTION

- **Stop the engine and chock the wheels before checking brake pedal.**

1. Release the parking brake.
2. Slightly depress the brake pedals and measure free travel at top of pedal stroke.
3. If the measurement is not within the factory specifications, loosen the lock nut and turn the turnbuckle to adjust the brake rod length.
4. Retighten the lock ut securely.
   Keep the free travel in the right and left brake pedals equal.

Brake pedal free travel (**L**)	Factory spec.	30 to 40 mm 1.18 to 1.57 in.

■ **NOTE**

- **After checking brake pedal free play, be sure to engage the parking brake lever fully and check to see that the brake pedals are securely locked.**

(1) Brake Pedal
(2) Turnbuckle
(3) Lock Nut

W10114120

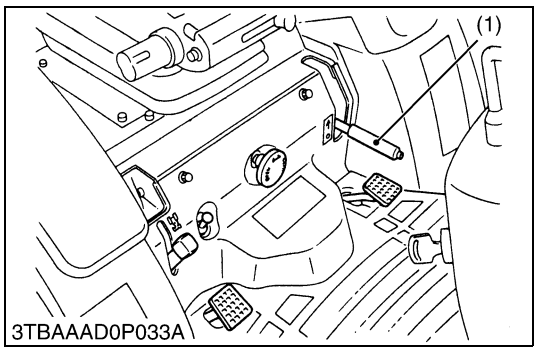

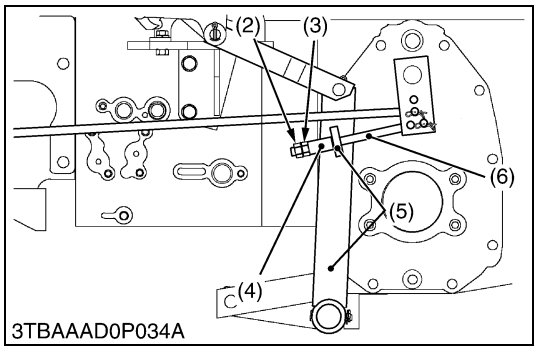

Checking Parking Brake Lever Travel

1. Pull the parking brake lever (1) to the parking position while counting the ratchet sound made by the parking brake lever (1).
2. If the counted ratchet sound is not within the factory specification, adjust the parking brake lever travel.

CAUTION

- **Stop the engine and remove the key, and the chock wheels before checking parking brake.**

Parking brake lever travel	Factory spec.	3 to 5 notches

(When adjusting)

1. Release the parking brake lever.
2. Be sure to adjust the free travel of the right and left brake pedals.
3. Place the jack under the transmission case, then remove the rear tires and set the rigid rack under the rear axles.
4. Loosen the lock nuts (2) of the right and left rods (6).
5. Tighten the adjusting nut (3) of the right rod (6) by hand until the collar (4) comes into contact with the arm (5). Make half and one more turn of the nut.
6. Tighten the adjusting nut (3) of the left rod (6) by hand until the collar (4) comes into contact with the arm (5).
7. Tighten up the lock nuts (2) of right and left rods.
8. Make sure the parking brake lever gets locked at the its 3rd, 4th or 5th notch.
9. Install the right and left tires.

■ NOTE

- **After adjusting the parking brake lever free travel :**
  - **Right and left parking brake for even braking.**
  - **With the parking brake released, make sure that the right and left tires do not drag on.**

(1) Parking Brake Lever
(2) Lock Nut
(3) Adjusting Nut
(4) Collar
(5) Parking Brake Arm
(6) Parking Brake Rod

W10116100

(2) Disassembling and Assembling

Disassembling Brake Pedal and Parking Brake Lever

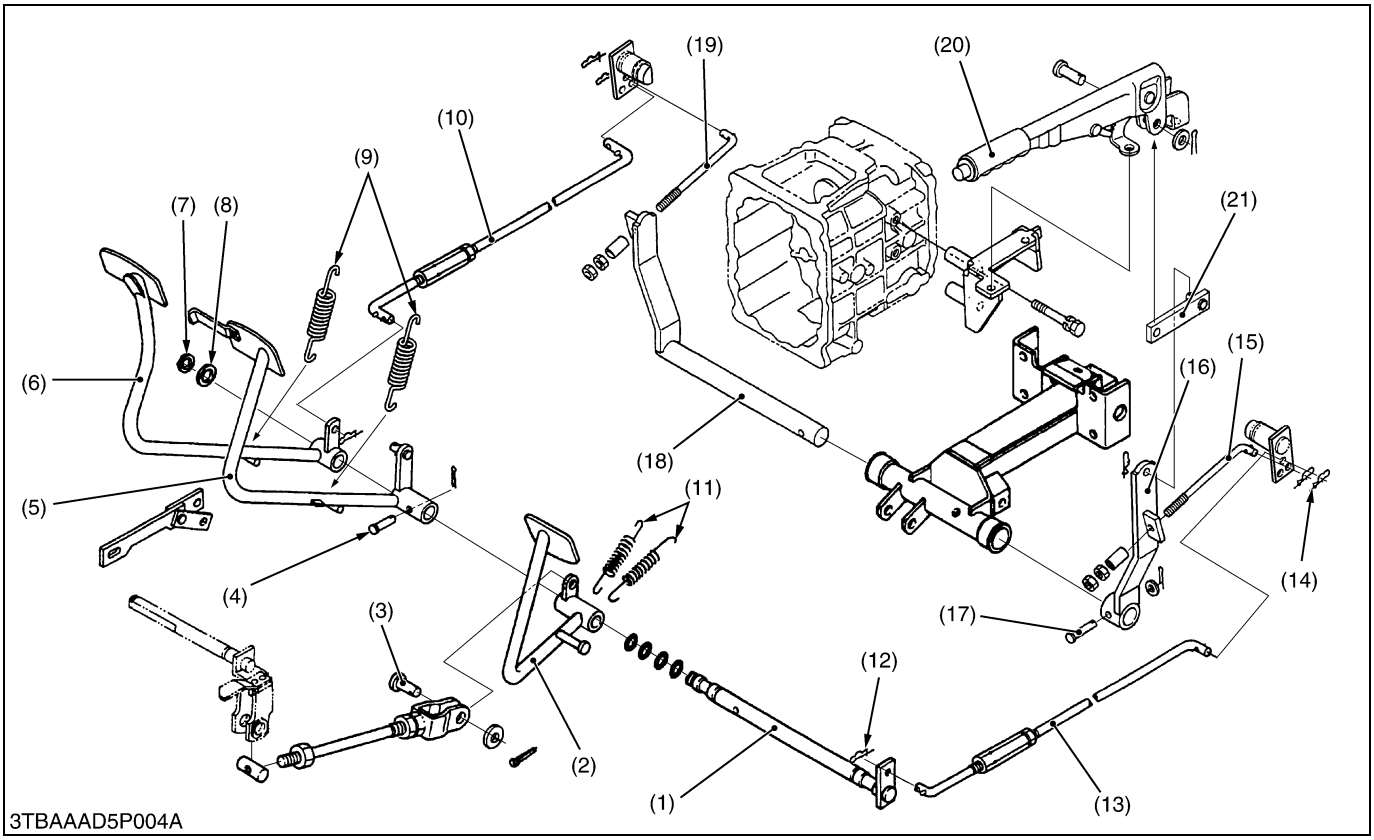

(1) Brake Pedal Shaft
(2) Clutch Pedal
(3) Clevis Pin
(4) Clevis Pin
(5) Brake Pedal LH
(6) Brake Pedal RH
(7) External Snap Ring
(8) Collar
(9) Return Spring (Brake Pedal)
(10) Brake Rod RH
(11) Return Spring (Clutch Pedal)
(12) Spring Lock Pin
(13) Brake Rod LH
(14) Spring Lock Pin
(15) Parking Brake Rod LH
(16) Parking Brake Arm
(17) Clevis Pin
(18) Parking Brake Arm Shaft
(19) Parking Brake Rod RH
(20) Parking Brake Lever
(21) Parking Brake Lever Plate

(Brake Pedal)

1. Remove the right hand side step.
2. Remove the HST pedal. (HST Model)
3. Remove the spring lock pins (12) and disconnect the brake rods (10), (13).
4. Remove the return springs (9), (11).
5. Remove the external snap ring (7) at the end of the brake pedal shaft (1).
6. Remove the clevis pin (4) of the brake pedal LH (5) and remove the clevis pin (3) of the clutch pedal (2).
7. Pull the right and left brake pedals from the brake pedal shaft (1).
8. Tap out the brake pedal shaft (1) to the left, and remove it with the clutch pedal (8).

(Parking Brake)

1. Remove the lock nuts and remove the parking brake rods (15), (19).
2. Remove the spring lock pins (12), (14) and disconnect the brake rods (10), (13).
3. Disconnect the parking brake arm (16) from parking brake lever plate (21).
4. Remove the clevis pin (17) and remove the parking brake arm (16) and arm shaft (18).
5. Remove the parking brake lever (20) and parking brake lever plate (21) as a unit.

(When reassembling)

- Apply grease to the brake pedal shaft.
- Be sure to adjust the brake pedal free travel and parking brake lever travel (See page 5-S3, S4).

(3) Servicing

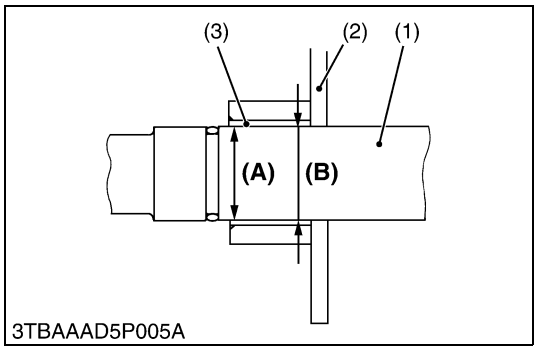

Clearance between Brake Pedal Shaft and Center Frame Bushing

1. Measure the brake pedal shaft O.D. with an outside micrometer.
2. Measure the bushing (3) I.D. with a cylinder gauge.
3. If the clearance exceeds the allowable limit, replace it.

Clearance between brake pedal shaft and center frame bushing	Factory spec.	0 to 0.165 mm 0 to 0.00649 in.
	Allowable limit	1.0 mm 0.039 in.

Brake pedal shaft O.D.	Factory spec.	24.916 to 25.030 mm 0.98094 to 0.98543 in.
Center frame bushing I.D.	Factory spec.	25.030 to 25.081 mm 0.98543 to 0.98744 in.

(1) Brake Pedal Shaft
(2) Center Frame
(3) Bushing

(A) Bushing I.D.
(B) Brake Pedal Shaft O.D.

W10126340

[2] BRAKE ASSEMBLY

(1) Disassembling and Assembling

(A) Separating Rear Axle Case with Brake Assembly

Refer to **"SEPARATING REAR AXLE CASE"** of Section 4. (See page 4-S3 to 4-S8.)

(B) Disassembling Brake Assembly

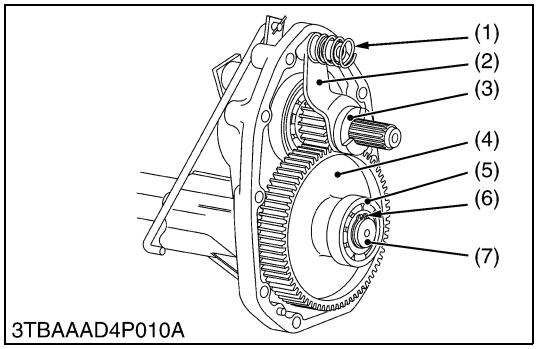

Differential Lock Shift Fork, Differential Lock Clutch (Right Side Only), 57T Gear and Rear Axle

1. Remove the spring (1).
2. Draw out the differential lock shift fork (2) and differential lock clutch (3).
3. Remove the external snap ring (6) and remove the bearing (5).
4. Draw out the 57T gear (4) from the rear axle (7).
5. Tap out the rear axle (7) to the outside of the rear axle case.

(1) Spring
(2) Differential Lock Shift Fork
(3) Differential Lock Clutch
(4) 57T Gear
(5) Bearing
(6) External Snap Ring
(7) Rear Axle

W10129700

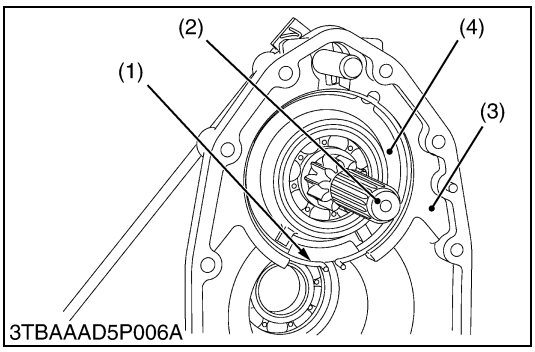

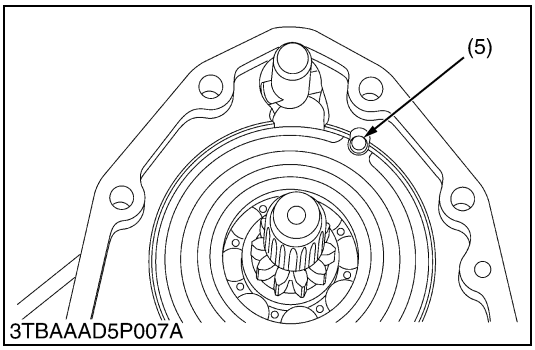

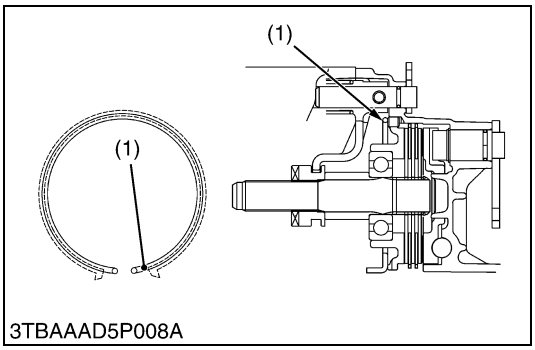

Brake Assembly

1. Remove the internal snap ring (1).
2. Remove the brake shaft (2) with brake discs.

(When reassembling)

- When installing the internal snap ring (1) to rear axle case (3) as shown in the figure.
- When installing the bearing holder (4) to the rear axle case (3), do not forget to install the straight pin (5).

(1) Internal Snap Ring
(2) Brake Shaft
(3) Rear Axle Case
(4) Bearing Holder
(5) Straight Pin

W10131250

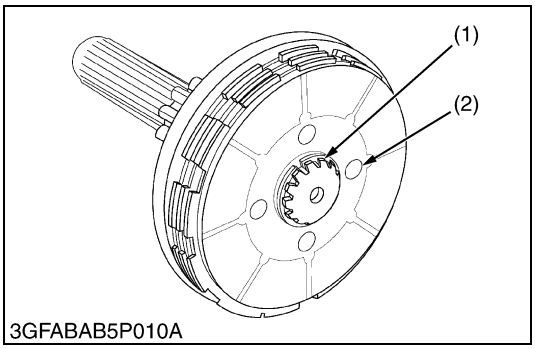

Brake Discs and Friction Plate

1. Remove the external snap ring (1), and remove the brake discs and friction plate.
2. Remove the cam plate and balls.
3. Remove the external snap ring and pull out the brake cam lever.

(When reassembling)

- Install the brake discs with their holes (2) deviation at less than 1/3 of the total hole area.

(1) External Snap Ring
(2) Hole

W10133740

(2) Servicing

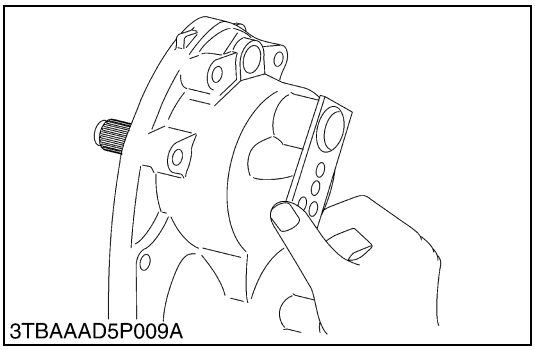

Brake Cam Lever Movement

1. Move the brake cam lever by hand to check the movement.
2. If the movement is heavy, refine the brake cam with emery paper.

W10135120

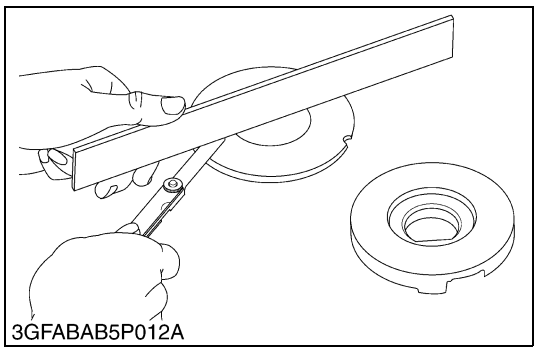
3GFABAB5P012A

Cam Plate Flatness and Bearing Holder Wear

1. Place a straightedge of 150 mm (5.91 in.) or more in length on the contacting surface of the cam plate and the bearing holder.
2. Inspect the friction surface of the cam plate and the bearing holder with the straightedge, and determine if a 0.30 mm (0.0118 in.) feeler gauge will fit on the part of wear.
3. If it will fit, resurface.

W10135750

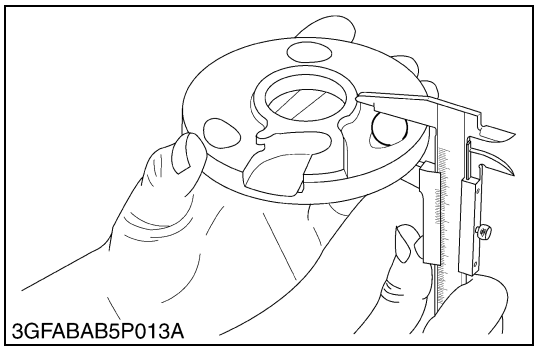
3GFABAB5P013A

Height of Cam Plate and Ball

1. Measure the height of the cam plate with the ball installed.
2. If the measurement is less than the allowable limit, replace the cam plate and balls.
3. Inspect the ball holes of cam plate for uneven wear.
4. If the uneven wear is found, replace it.

Height of cam plate and ball	Factory spec.	22.89 to 22.99 mm 0.9012 to 0.9051 in.
	Allowable limit	22.40 mm 0.8819 in.

W10137160

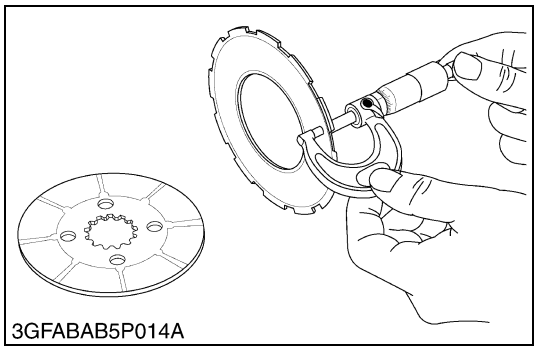
3GFABAB5P014A

Brake Disc and Friction Plate Wear

1. Measure the brake disc thickness and the friction plate thickness with an outside micrometer.
2. If the thickness is less than the allowable limit, replace it.

Brake disc thickness	Factory spec.	3.3 to 3.5 mm 0.130 to 0.138 in.
	Allowable limit	3.0 mm 0.118 in.

Friction plate thickness	Factory spec.	1.92 to 2.08 mm 0.0756 to 0.0819 in.
	Allowable limit	1.52 mm 0.0598 in.

W10138450

6 FRONT AXLE

MECHANISM

CONTENTS

1. STRUCTURE 6-M1
2. BI-SPEED TURN SYSTEM 6-M2
   [1] STRUCTURE 6-M2
   [2] OPERATION 6-M3
      (1) Power Train 6-M3
      (2) Bi-speed Cam Operation 6-M4
3. FRONT WHEEL ALIGNMENT 6-M5

1. STRUCTURE

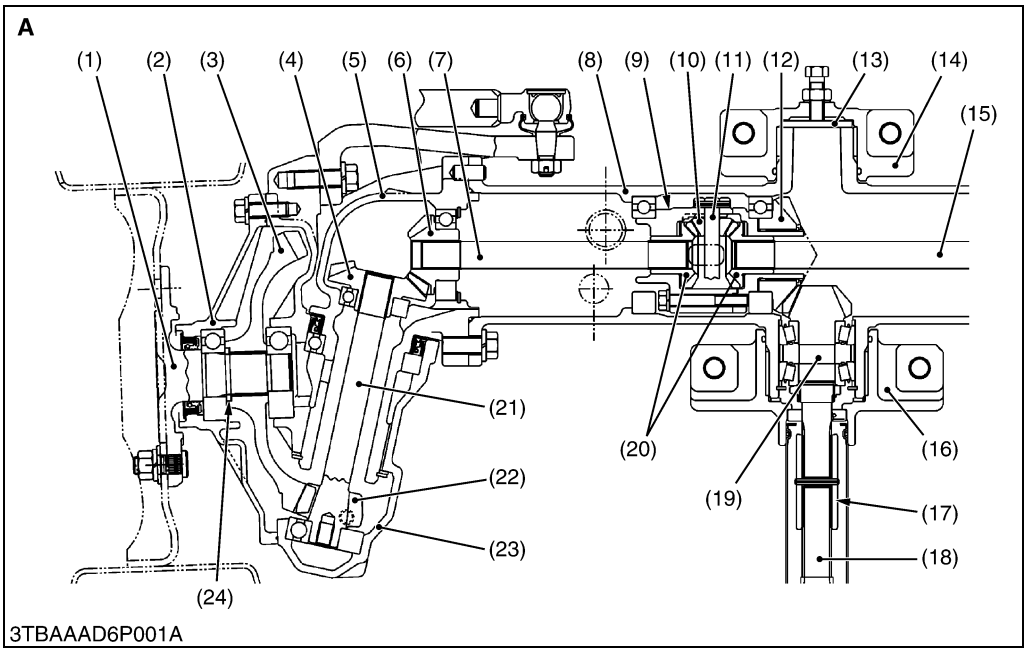

(1) Axle
(2) Axle Flange
(3) Bevel Gear
(4) Bevel Gear
(5) Bevel Gear Case
(6) Bevel Gear
(7) Differential Yoke Shaft, LH
(8) Front Axle Case
(9) Differential Gear Assembly
(10) Differential Pinion Gear
(11) Pinion Shaft
(12) Spiral Bevel Gear
(13) Collar
(14) Front Axle Bracket, Front
(15) Differential Yoke Shaft, RH
(16) Front Axle Bracket, Rear
(17) Coupling
(18) Propeller Shaft
(19) Spiral Bevel Pinion Shaft
(20) Differential Side Gear
(21) Bevel Gear Shaft
(22) Bevel Gear
(23) Front Gear Case
(24) Collar

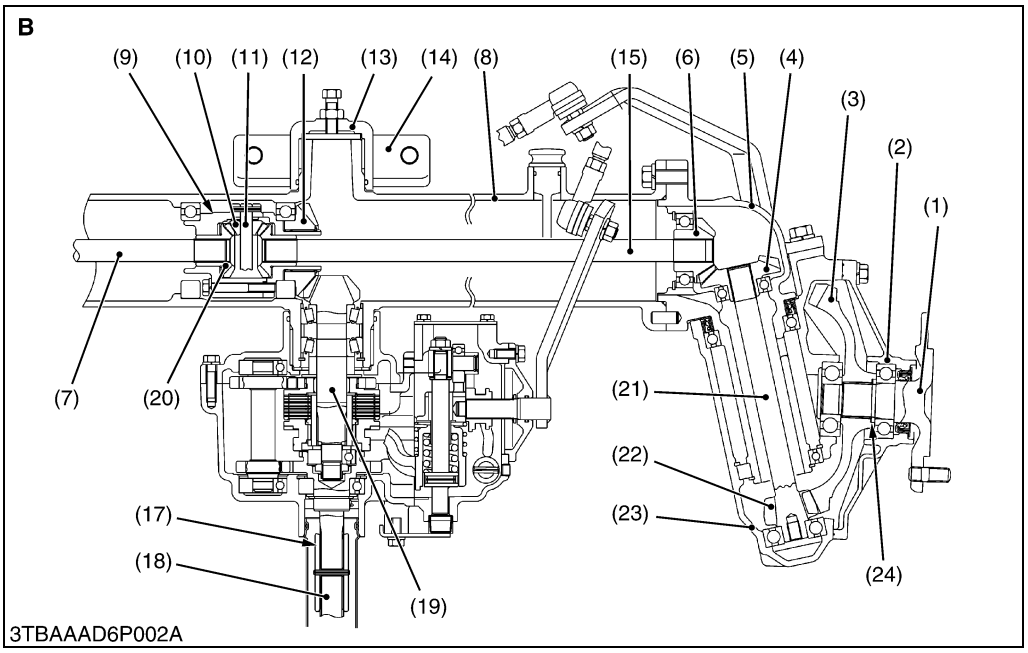

A : 4 Wheel Drive without Bi-speed Turn System (B1710D, B2110D, B2410D)
B : 4 Wheel Drive with Bi-speed Turn System (B2110DB, B2110HDB, B2410DB, B2410HDB, B2710HDB)
*** The illustration of B shows front axle of B2710HDB.**

W10126560

The front axle is constructed as shown above. Power is transmitted from the transmission through the propeller shaft (18) to the spiral bevel pinion shaft (19), then to the spiral bevel gear (12) and to the differential side gear (20).

The power through the differential side gear is transmitted to the differential yoke shaft (7), (15), and to the bevel gear shaft (21) through the bevel gears (4), (6) in the bevel gear case (5).

The revolution is greatly reduced by the bevel gears (22), (3), then the power is transmitted to the axle (1).

The differential system allows each wheel to rotate at a different speed to make turning easier.

2. BI-SPEED TURN SYSTEM

[1] STRUCTURE

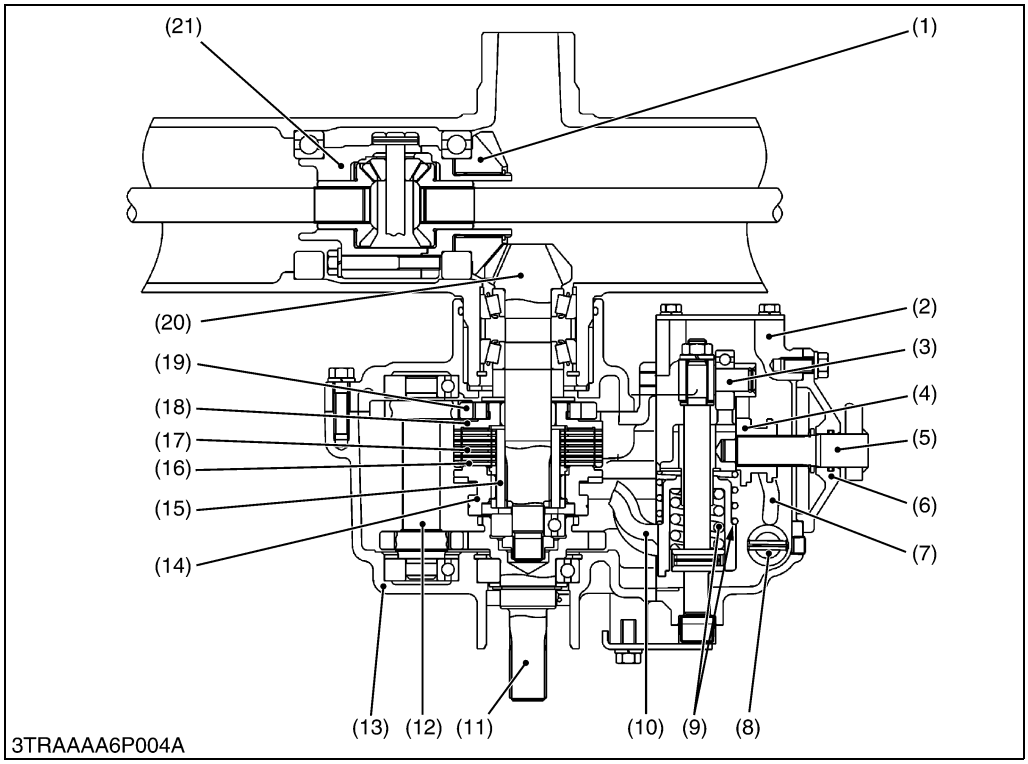

(1) Bevel Gear
(2) Bi-speed Turn Case
(3) Shift Roller Shaft
(4) Shift Cam
(5) Shift Lever
(6) Shift Lever Fulcrum
(7) Change Fork
(8) Change Lever
(9) Spring
(10) Bi-speed Turn Shift Fork
(11) Gear Shaft
(12) Gear Shaft
(13) Bi-speed Turn Gear Case
(14) Shifter
(15) Coupling
(16) Clutch Disc
(17) Friction Plate
(18) Clutch Drum
(19) 18T Gear
(20) Spiral Bevel Pinion Shaft
(21) Front Differential Assembly
(22) Shift Rod
(23) Bi-speed Turn Rod
(24) Bi-speed Turn Change Cable
(25) Bi-speed Turn Lever

W10131560

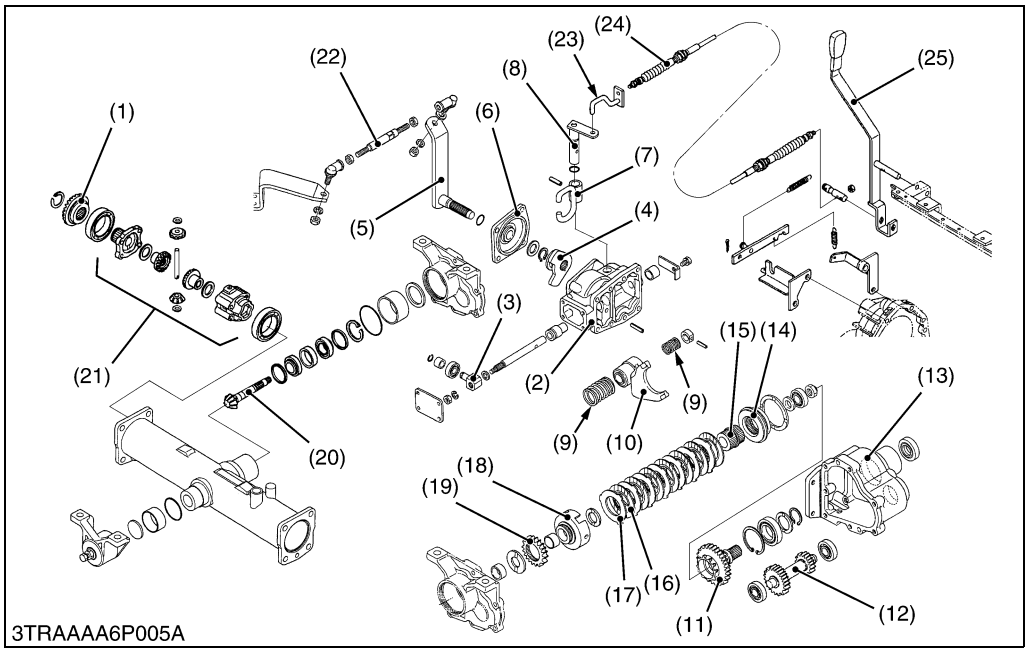

The front axle with bi-speed turn is constructed as shown above. Front wheel speed change mechanism, which is located in the bi-speed turn gear case (13) and bi-speed turn case (2), consists of the bi-speed turn lever (25), shift rod (22), shift cam (4), shift fork (10), bi-speed turn clutch assembly (14 to 18), gears (11), (12), (19) and so on.

[2] OPERATION

(1) Power Train

Bi-speed clutch is mechanically engaged when front wheel reaches specified turning angle.
This bi-speed turn front wheel speed is 1.53 times higher than the standard front wheel speed.

(Reference)

- Bi-speed turn operating angle :
  B2110, B2410 : More than 0.40 to 0.45 rad. (23 to 26 °)
  B2710 : More than 0.45 to 0.49 rad. (26 to 28 °)

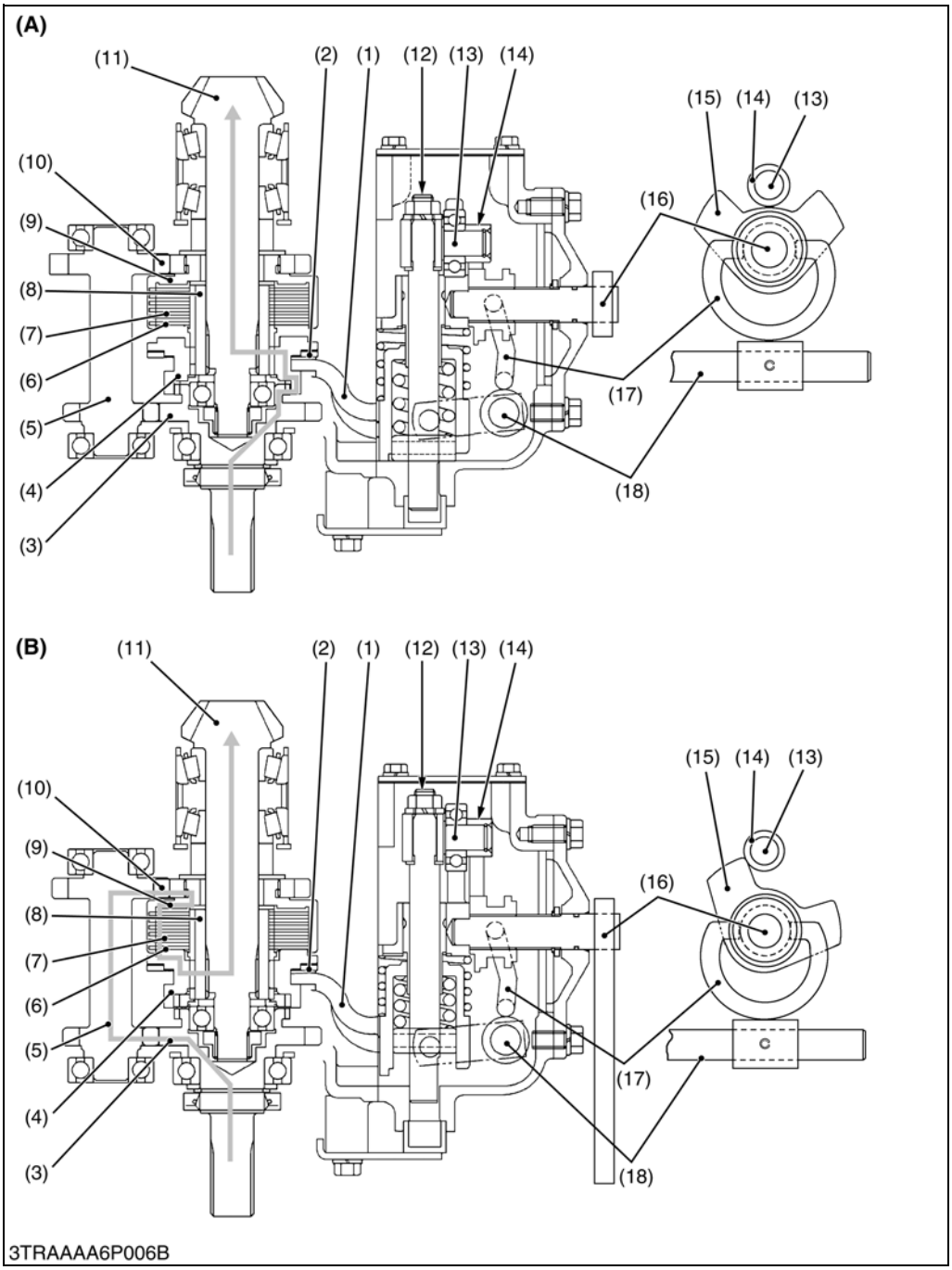

(1) Shift Fork
(2) Shift Collar
(3) 21T Gear Shaft
(4) Shifter
(5) 13T-10T Gear Shaft
(6) Clutch Disk
(7) Friction Plate
(8) Bi-speed Turn Coupling
(9) Bi-speed Turn Clutch Drum
(10) 18T Gear
(11) Spiral Bevel Pinion Shaft
(12) Shift Rod
(13) Shift Roller Shaft
(14) Shift Roller
(15) Shift Cam
(16) Shift Lever
(17) Change fork
(18) Change Lever

W10135260

(A) Standard 4WD

21T Gear Shaft (3) → Shifter (4) → Bi-speed Turn Coupling (8) → Spiral Bevel Pinion Shaft (11) → Front Axle.

(B) Bi-speed Turn 4WD

21T Gear Shaft (3) → 13T-10T Gear Shaft (5) → 18T Gear (10) → Bi-speed Turn Clutch Drum (9) → Friction Plate (7) → Clutch Disc (6) → Bi-speed Turn Coupling (8) → Spiral Bevel Pinion Shaft (11) → Front Axle.

(2) Bi-speed Cam Operation

Bi-speed turn 4WD and standard 4WD positions are selected by change lever (6) to move the position of shift cam (1). This lever is operated by the bi-speed turn change lever located on the right side of the clutch housing.

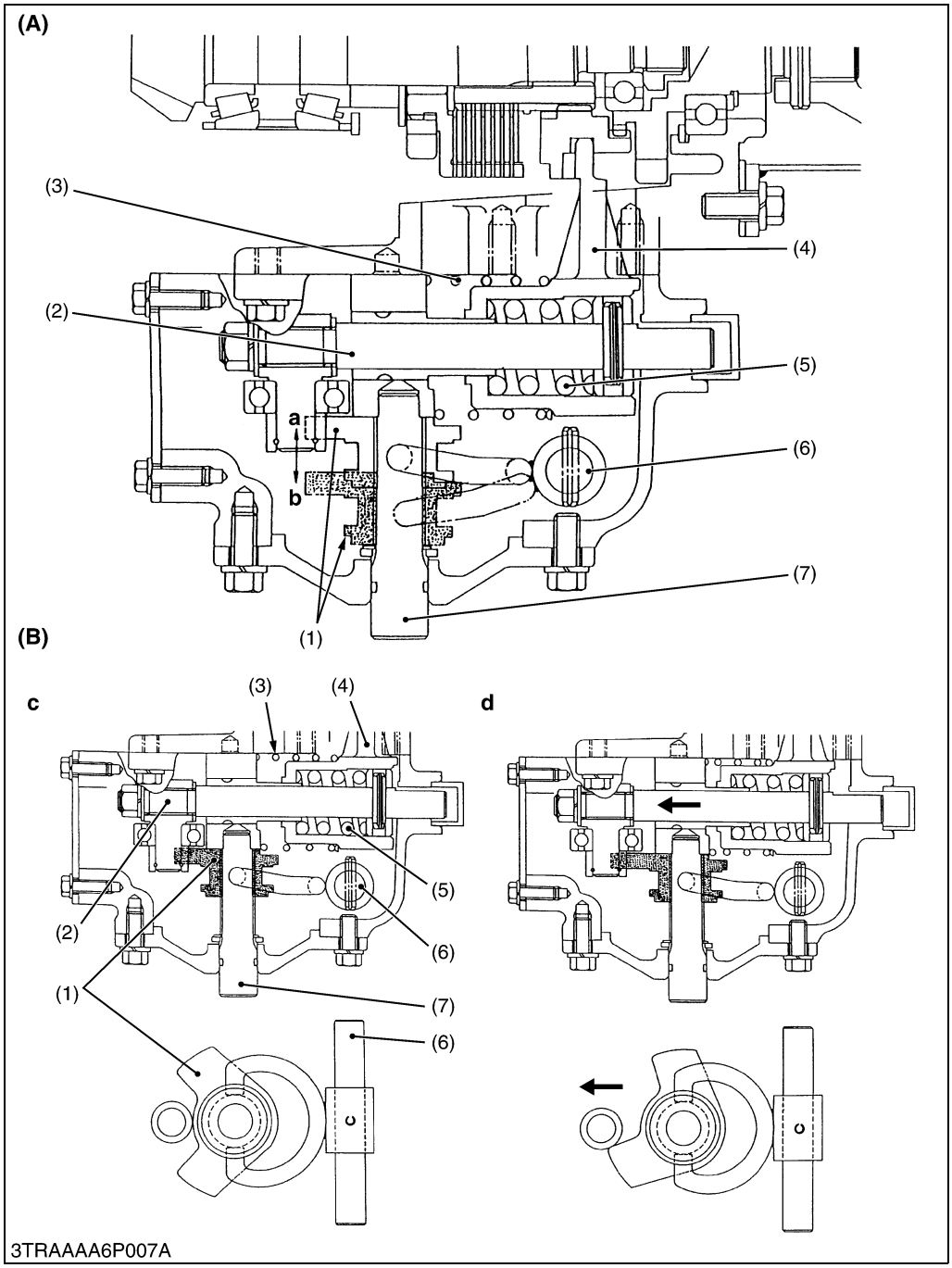

(1) Shift Cam
(2) Shift Rod
(3) Spring
(4) Shift Fork
(5) Spring
(6) Change Lever
(7) Shift Lever

(a) Bi-speed turn "ON"
(b) Bi-speed turn "OFF"
(c) Less than 0.40 rad. (23 °) turning angle (B2110, B2410) Less than 0.45 rad. (26 °) turning angle (B2710)
(d) More than 0.45 rad. (26 °) turning angle (B2110, B2410) More than 0,49 rad. (28 °) turning angle (B2710)

W10139070

(A) Standard 4WD

The bi-speed turn change lever is shifted to the **"OFF"** position.

The shift cam (1) is free to turn, so that the shift rod (2) and shift fork (4) are remained in standard 4WD position by springs (3), (5).

(B) Bi-speed Turn 4WD

The bi-speed turn change lever is shifted to the **"ON"** position.

When the steering wheel is turned more than approx. 0.45 rad. (26 °) or 0.49 rad. (28 °) turning angle, the shift lever (7) and shift cam (1) are turned together. This cam make the shift rod (2) move the arrow direction so that the shifter is engaged with the bi-speed turn clutch.

When the steering wheel is turned less than approx. 0.40 rad. (23 °) or 0.45 rad. (26 °) turning angle, the shift rod doesn't move in spite of the cam rotation.

3. FRONT WHEEL ALIGNMENT

Front wheel alignment is a term given to mean four angle settings in three dimensions camber, kingpin inclination, toe-in and caster angle. These angle settings are made for the following purposes.

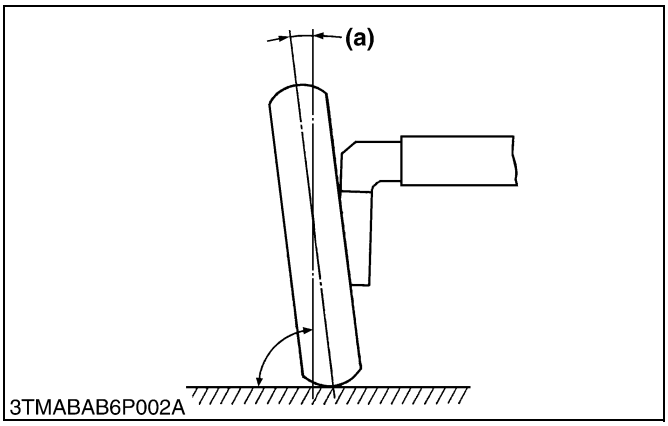

■ Camber

The front wheels are tilted from the vertical as viewed from the front, the wheels are farther apart at the top than at the bottom. This inclination is called camber **(a)**. Camber reduces rolling resistance of the wheels, and also minimizes bending or twisting of the front axle.

Camber (a)	0.035 rad. 2 °

W10128110

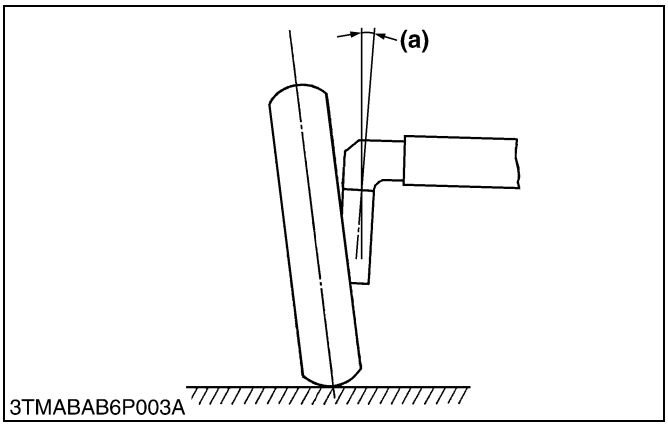

■ Kingpin Angle

The kingpin is tilted from the vertical as viewed from the front. This angle is called kingpin angle **(a)**. As with the camber, kingpin inclination reduces rolling resistance of the wheels, and prevents any shimmy motion of the steering wheel. It also reduces steering effort.

Kingpin angle (a)	0.21 rad. 12 °

W10131960

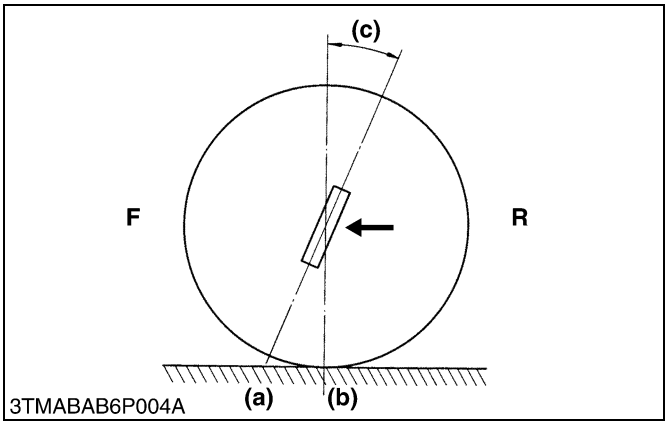

■ Caster

The kingpin is tilted forward as viewed from the side. That is, the intersection **(a)** made by the center line of the kingpin shaft and the ground is ahead of the intersection **(b)** made by the center line of the wheel and ground. This inclination is called caster **(c)**. Caster helps provide steering stability. As with the kingpin inclination, caster reduces steering effort.

Caster angle (c)	0 rad. 0 °

F : Front **R : Rear**

W10133220

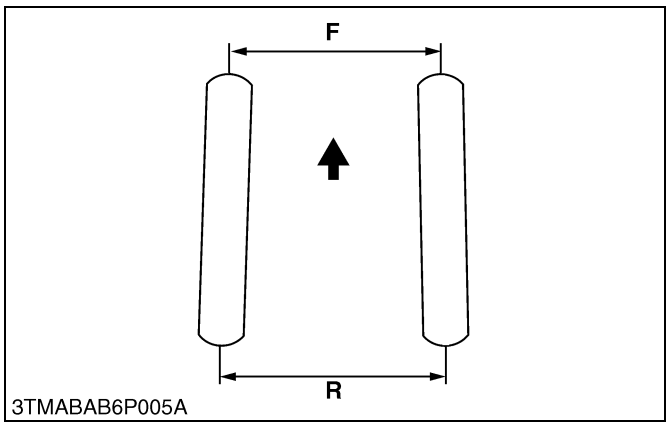

■ Toe-in

Viewing the front wheels from above reveals that the distance between the front wheels is less at the front than at the rear. This turning in of the front wheels is called toe-in. The front wheels tend to roll outward due to the camber, but toe-in offsets this and ensures parallel rolling of the front wheel. Another purpose of toe-in is to prevent excessive and uneven wear of tires.

Toe-in	B1710 B2110 B2410	0 to 10 mm 0 to 0.39 in.
	B2710	0 to 7 mm 0 to 0.28 in.

F : Front **R : Rear**

W10132590

SERVICING

CONTENTS

1. TROUBLESHOOTING 6-S1
2. SERVICING SPECIFICATIONS 6-S2
3. TIGHTENING TORQUES 6-S4
4. CHECKING, DISASSEMBLING AND SERVICING.....6-S5
   [1] CHECKING AND ADJUSTING 6-S5
   [2] DISASSEMBLING AND ASSEMBLING.....6-S8
      (1) Separating Front Axle Assembly.....6-S8
      (2) Disassembling Front Axle Assembly.....6-S13
      (3) Disassembling Bi-speed Turn Case.....6-S17
   [3] SERVICING 6-S20
      (1) Differential Gears, Spiral Bevel Pinion, Bevel Gear Case and Bracket.....6-S20
      (2) Bi-speed Turn System 6-S24

1. TROUBLESHOOTING

Symptom	Probable Cause	Solution	Reference Page
Front Wheels Wander to Right to Left	• Tire pressure uneven • Improper toe-in adjustment (improper alignment) • Clearance between front axle case boss and front axle bracket bushing (front, rear) excessive • Front axle rocking force too small • Tie-rod end loose • Air sucked in power steering circuit	Adjust Adjust Replace Adjust Tighten Bleed	G-40 6-S5 6-S23 6-S5 6-S13 –
Front Wheels Can Not Be Driven	• Front wheel driving gears in front axle gear case broken • Universal joint broken • Front wheel drive gears in transmission broken • Front differential gear broken • Coupling displaced	Replace Replace Replace Replace Reassembling	6-S13 – – 6-S16 6-S8, S11
Noise	• Gear backlash excessive • Oil insufficient • Bearings damaged or broken • Gears damaged or broken • Spiral bevel pinion shaft turning force improper	Adjust or replace Replenish Replace Replace Adjust	6-S21, S22 6-S8 – – 6-S21

W10143220

[Bi-speed Turn Model]

Bi-speed Turn System Does Not Operate or Slipping	• Bi-speed turn clutch friction torque too low • Shift fork spring weaken or damaged • Shift fork deformed, worn or broken • Change fork deformed or broken • Shift cam rusted • Shift roller worn • Clutch disc worn • Friction plate worn or deformed • Gear broken • Shifter collar worn • Wrong assembly of shift cam • Wrong linkage adjustment	Adjust Replace Replace Replace Repair or replace Replace Replace Replace Replace Replace Reinstall Readjust	6-S24 6-S18 6-S18 6-S18 6-S18 6-S18 6-S20 6-S20 6-S19 6-S20 6-S18 6-S7
Bi-speed Turn Does Not Return to Standard 4WD Position	• Shift fork deformed • Shift cam deformed • Wrong linkage adjustment	Replace Replace Readjust	6-S18 6-S18 6-S7
Different Bi-speed Turn Starting Angle Between Right and Left Turning	• Shift rod improperly adjusted • Shift lever and shift cam improperly assembled • Shift cam worn	Adjust Reassemble Replace	6-S6 6-S18 6-S18

W10137180

2. SERVICING SPECIFICATIONS

Item			Factory Specification	Allowable Limit
Front Wheel Alignment	Toe-in	B1710 B2110 B2410	0 to 10 mm 0 to 0.39 in.	–
		B2710	0 to 7 mm 0 to 0.28 in.	–
Front Axle	Rocking Force		49.0 to 98.1 N 5.0 to 11.0 kgf 11.0 to 22.1 lbs	–
Differential Case, Differential Case Cover to Differential Side Gear	Clearance		0.040 to 0.082 mm 0.00157 to 0.00323 in.	0.17 mm 0.0067 in.
Differential Case	I.D.		26.000 to 26.021 mm 1.02362 to 1.02445 in.	–
Differential Case Cover	I.D.		26.000 to 26.021 mm 1.02362 to 1.02445 in.	–
Differential Side Gear	O.D.		25.939 to 25.960 mm 1.02122 to 1.02205 in.	–
Pinion Shaft to Differential Pinion	Clearance		0.038 to 0.068 mm 0.00150 to 0.00268 in.	0.17 mm 0.0067 in.
Pinion Shaft	O.D.		9.972 to 9.987 mm 0.39260 to 0.39312 in.	–
Differential Pinion	I.D.		10.025 to 10.040 mm 0.39469 to 0.39528 in.	–
Differential Pinion to Differential Side Gear	Backlash		0.1 to 0.3 mm 0.004 to 0.012 in.	–
Spiral Bevel Pinion Shaft	Turning Torque		0.8 to 1.0 N·m 0.08 to 0.10 kgf·m 0.59 to 0.73 ft-lbs	–
Spiral Bevel Pinion Shaft to Spiral Bevel Gear	Backlash		0.10 to 0.30 mm 0.0039 to 0.0118 in.	–
11T Bevel Gear to 16T Bevel Gear	Backlash		0.10 to 0.30 mm 0.0039 to 0.0118 in.	–
Front Axle Case Boss to Bracket Bushing (Front)	Clearance		0.125 to 0.280 mm 0.00492 to 0.01102 in.	0.45 mm 0.0177 in.
Front Axle Case Boss	O.D.		49.950 to 49.975 mm 1.96653 to 1.96751 in.	–
Bracket Bushing	I.D.		50.100 to 50.230 mm 1.97243 to 1.97755 in.	–

W10138740

Item		Factory Specification	Allowable Limit
Front Axle Case Boss to Bracket Bushing (Front)	Clearance	0.090 to 0.250 mm 0.00354 to 0.00984 in.	0.45 mm 0.0177 in.
Front Axle Case Boss	O.D.	64.940 to 64.970 mm 2.55669 to 2.55787 in.	–
Bracket Bushing	I.D.	65.060 to 65.190 mm 2.56141 to 2.56653 in.	–

W10138740

[Bi-speed Turn Model]

Bi-speed Turn Clutch	Dynamic Friction Torque of Bi-speed Turn Clutch on the Front Axle Wheel Hub	441.3 to 490.4 N·m 45 to 50 kgf·m 325.5 to 361.7 ft-lbs	–
Shift Fork to Shifter Groove (with Shifter Collar)	Clearance	0.1 to 0.7 mm 0.004 to 0.028 in.	1.0 mm 0.04 in.
Bi-speed Turn Spring (Short)	Free Length	32.5 to 32.6 mm 1.280 to 1.283 in.	28.5 mm 1.220 in.
	Maximum Setting Length	Load 1613 N / 25.5 mm 164.5 kgf / 25.5 mm 362.7 lbs / 1.00 in.	Load 1411 N / 25.5 mm 143.9 kgf / 25.5 mm 317.4 lbs / 1.00 in.
Bi-speed Turn Spring (Long)	Free Length	52.0 mm 2.047 in.	45.5 mm 1.791 in.
	Maximum Setting Length	Load 86.3 N / 35.0 mm 8.8 kgf / 35.0 mm 19.4 lbs / 1.378 in.	Load 75.5 N / 35.0 mm 7.7 kgf / 35.0 mm 17.0 lbs / 1.378 in.
Bi-speed Turn Clutch Disc	Thickness	1.7 to 1.9 mm 0.067 to 0.075 in.	1.4 mm 0.055 in.
Bi-speed Turn Friction Plate	Thickness	0.95 to 1.05 mm 0.037 to 0.041 in.	0.8 mm 0.032 in.
Bi-speed Turn Cable Outer (Clutch Housing Side)	Distance **A** [B2110, B2410]	18 mm 0.71 in.	–
	[B2710]	16 mm 0.63 in.	–
Bi-speed Turn Cable Inner (Front Axle Case Side)	Distance **B** [B2110, B2410]	10 mm 0.39 in.	–
	[B2710]	8 mm 0.31 in.	–

W10139730

3. TIGHTENING TORQUES

Tightening torques of screws, bolts and nuts on the table below are especially specified.
(For general use screws, bolts and nuts : See page G-9.)

Item	N·m	kgf·m	ft-lbs
Slotted nut for drag link	17.7 to 34.3	1.8 to 3.5	13.0 to 25.3
Front wheel mounting nut	77.5 to 90.1	7.9 to 9.2	57.1 to 66.5
Front hitch stay mounting nut (B1710, B2110, B2410)	124 to 147	12.6 to 15.0	91.1 to 108.5
(B2710)	200 to 230	20.4 to 23.5	147.5 to 169.6
Front axle bracket mounting screw			
(B1710, B2110, B2410)	124 to 147	12.6 to 15.0	91.1 to 108.5
(B2710)	200 to 230	20.4 to 23.5	147.5 to 169.6
Bevel gear case mounting screw	77.5 to 90.1	7.9 to 9.2	57.1 to 66.5
Knuckle arm mounting screw	103.0 to 117.7	10.5 to 12.0	76.0 to 86.8
Axle flange mounting screw	48.1 to 55.9	4.9 to 5.7	35.5 to 41.2
Differential case cover mounting screw	29.4 to 34.3	3.0 to 3.5	21.7 to 25.3
(Bi-speed Turn System)			
Bi-speed turn case mounting screws	23.6 to 27.4	2.4 to 2.8	17.4 to 20.2
Bi-speed turn gear case mounting screws	23.6 to 27.4	2.4 to 2.8	17.4 to 20.2
Bearing holder mounting screws	48.1 to 55.8	4.9 to 5.7	35.5 to 41.2
Case cover mounting screw	17.7 to 20.5	1.8 to 2.1	13.0 to 15.2
Spiral bevel pinion shaft staking nut	29.4 to 34.3	3.0 to 3.5	21.7 to 25.3

W10127360

4. CHECKING, DISASSEMBLING AND SERVICING

[1] CHECKING AND ADJUSTING

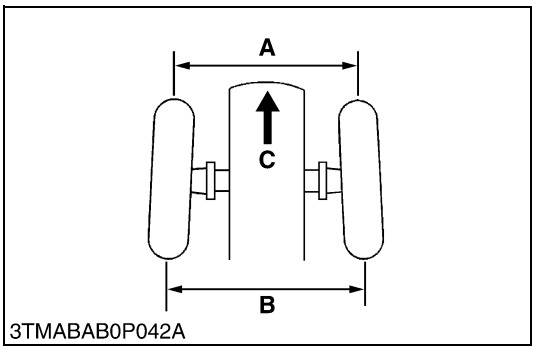

3TMABAB0P042A

Toe-in

1. Inflate the tires to the specified pressure.
2. Turn the front wheels straight ahead.
3. Measure the toe-in (**B**-**A**).
4. If the measurement is not within the factory specifications, adjust the tie-rod length.

Toe-in (**B**-**A**)	Factory spec.	B1710 B2110 B2410	0 to 10 mm 0 to 0.39 in.
		B2710	0 to 7 mm 0 to 0.28 in.

(A) Wheel to Wheel Distance at front **(C) Front**
(B) Wheel to Wheel Distance at rear

W10123810

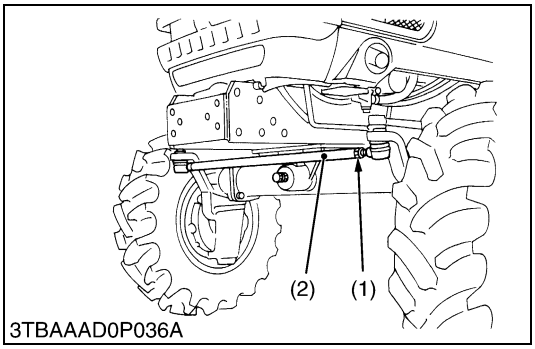

3TBAAAD0P036A

Toe-in Adjusting

1. Loosen the lock nuts (1).
2. Turn the tie-rod (2) until to be factory specification.
3. Tighten the lock nuts (1).

(1) Lock Nut (2) Tie-rod

W10126180

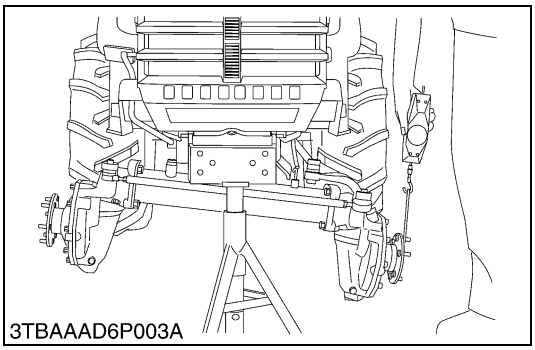
3TBAAAD6P003A

Front Axle Rocking Force

1. Jack up the front side of tractor.
2. Set a spring balance to the front axle flange.
3. Measure the front axle rocking force.
4. If the measurement is not within the factory specifications, adjust with the adjusting screw (1).
5. Tighten the lock nut (2) firmly.

Front axle rocking force	Factory spec.	49.0 to 98.1 N 5.0 to 10.0 kgf 11.0 to 22.1 lbs

(1) Adjusting Screw (2) Lock Nut

W10127220

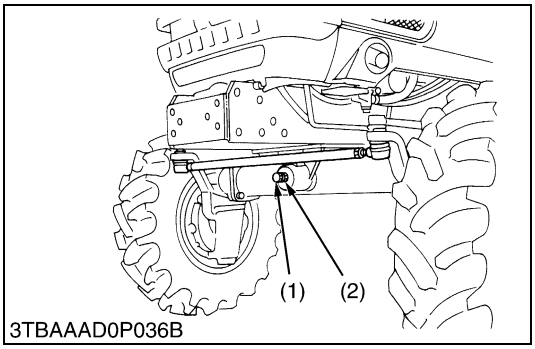

3TBAAAD0P036B

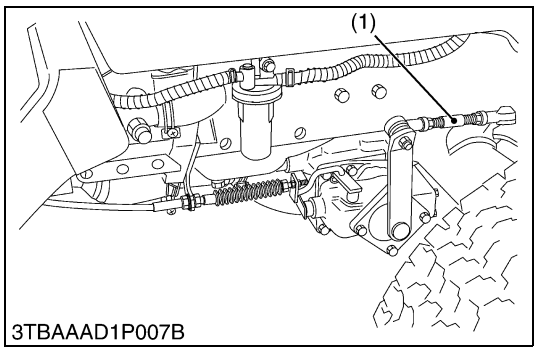

3TBAAAD1P007B

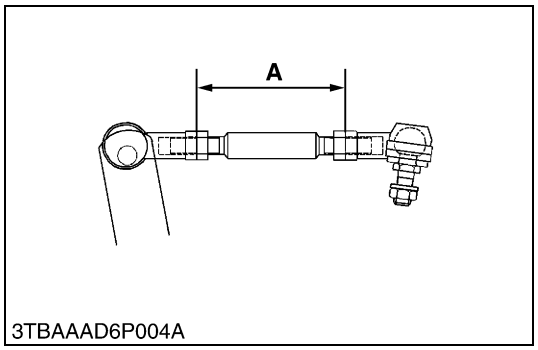

3TBAAAD6P004A

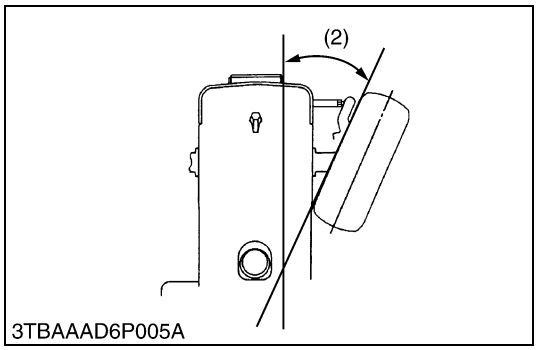

3TBAAAD6P005A

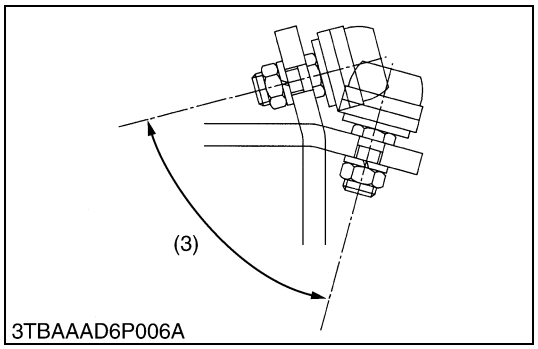

3TBAAAD6P006A

Bi-speed Turn Shift Rod (Bi-speed Turn Model)

1. Set the front wheel drive lever to the 4WD position and bi-speed turn lever to the **ON** position.
2. Hoist the front of the tractor to a position where you can turn the front wheels with your hands.
3. Turn the steering wheel and set the steering angle of the inside tire to as below.
   B2110, B2410 : 0.42 rad. (24 °)
   B2710 : 0.45 rad. (26 °)
   At this time, make sure both the left and right tires turn simultaneously in the same direction.
4. If both tires do not turn in the same direction, adjust length **A** of the bi-speed turn shift rod while being careful not to change the steering angle.
   (Set the neutral position when 4WD and bi-speed changes at 0.42 rad. (24 °).for B2110, B2410 or 0.45 rad. (26 °) for B2710.)
5. Make sure that when the wheels are steered to more than 0.45 rad. (26 °) for B2110, B2410 or 0.49 rad. (28 °) for B2710, the bi-speed turn starts to work.

Steering inner angle (2) (When bi-speed turn neutral)	Factory spec.	B2110 B2410	0.40 to 0.45 rad. 23 ° to 26 °
		B2710	0.45 to 0.49 rad. 26 ° to 28 °

(Reference)

- Length **A** of the bi-speed turn shift rod
  B2110, B2410 : 84 mm (3.31 in.)
  B2710 : 88 mm (3.46 in.)

■ **NOTE**

- **When you adjust the bi-speed turn shift rod, be sure the angle of the shift rod end is the same as the angle in the figure left.**

(1) Bi-speed Turn Shift Rod
(2) Steering Inner Angle
(3) 0.90 rad. (52 °)

W10128860

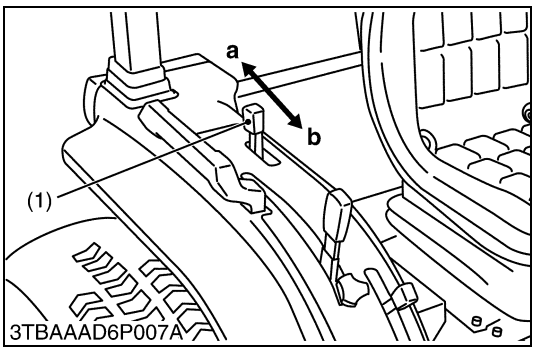

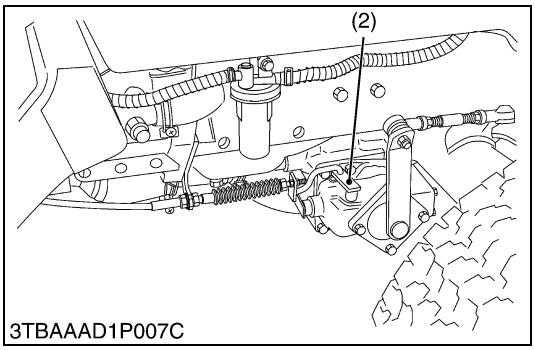

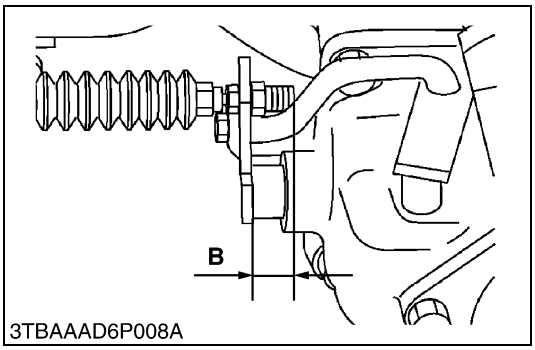

Bi-speed Turn Change Cable (Bi-speed Turn Model)

1. Set the bi-speed turn lever (1) to the bi-speed **ON** position.
2. Push the bi-speed case change lever (2) to the rear (bi-speed **ON** direction), and make sure there is no play in the lever.
3. If there is play in the lever, adjust the bi-speed turn cable inner length **B**.

(Reference)

Distance **B**	Factory spec.	B2110 B2410	10 mm 0.39 in.
		B2710	8 mm 0.31 in.

(1) Bi-speed Turn Lever
(2) Bi-speed Case Change Lever

a : ON
b : OFF

W10133460

[2] DISASSEMBLING AND ASSEMBLING

(1) Separating Front Axle Assembly

(A) 4 Wheel Drive without Bi-speed Turn Model (B1710D, B2110D, B2410D)

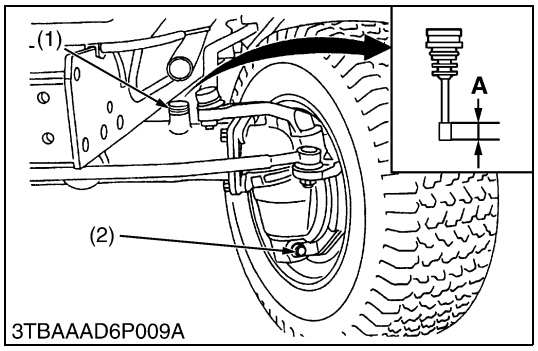

Draining Front Axle Case Oil

1. Place the oil pans underneath the front axle case.
2. Remove the both right and left hand side drain plugs (1) and filling plug (2) to drain the oil.
3. After draining, reinstall the drain plugs (1).

■ **IMPORTANT**

- **Use KUBOTA SUPER UDT fluid or SAE 80, 90 gear oil. Refer to "LUBRICANTS, FUEL AND COOLANT". (See page G-8.)**

Front axle case oil capacity	3.7 L 3.9 U.S.qts. 3.3 Imp.qts.

(1) Drain Plug
(2) Filling Plug with Dipstick

A : Oil level is acceptable within this range.

W10136500

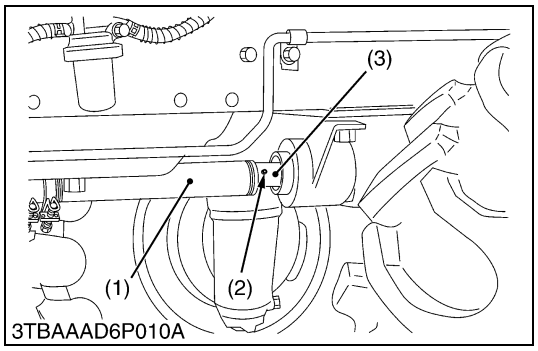

Disconnecting Propeller Shaft

1. Loosen the clamps and slide the propeller shaft cover (1) to the rear.
2. Tap out the spring pin (2) and slide the coupling (3) to the rear.

(When reassembling)

- Apply grease to the splines of the propeller shaft.

(1) Propeller Shaft Cover
(2) Spring Pin
(3) Coupling

W10138370

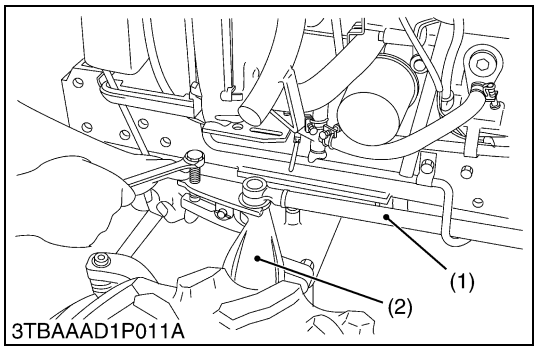

Drag Link

1. Remove the cotter pin and loosen the slotted nut.
2. Disconnect the drag link (1) with a tie-rod end lifter from the knuckle arm (2).

(When reassembling)

■ **IMPORTANT**

- **Do not loosen the slotted nut to align the hole.**
- **Install the cotter pin as shown in the figure.**

(Reference)

Tightening torque	Slotted nut	17.7 to 34.3 N·m 1.8 to 3.5 kgf·m 13.0 to 25.3 ft-lbs

(1) Drag Link
(2) Knuckle Arm

W10139500

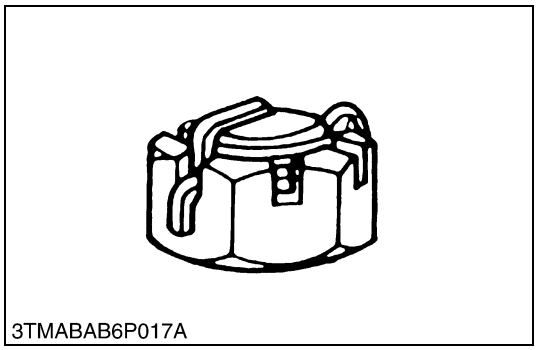

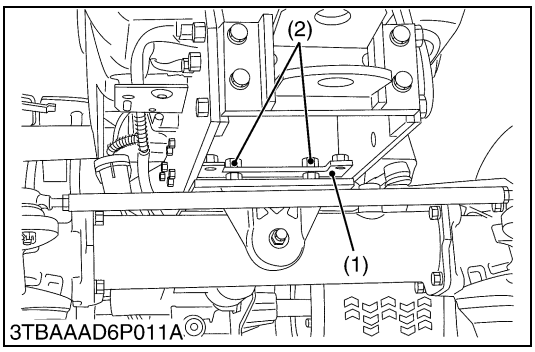

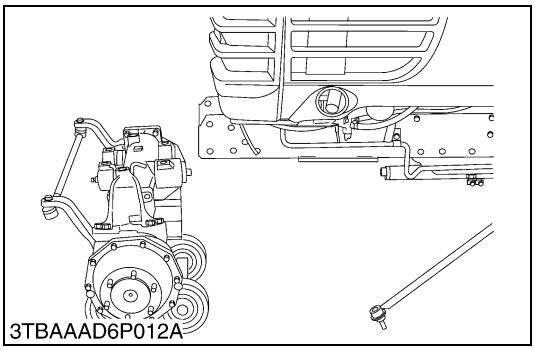

Front Axle Assembly

1. Lift up the front side of tractor and place the disassembling stand under the front axle frame.
2. Remove the front wheels.
3. Place the disassembling stand under the front axle.
4. Remove the front hitch stay mounting nuts (2) and remove the front hitch stay (1).
5. Remove the front axle brackets (Front and Rear) mounting screws.
6. Separate the front axle from the front axle frame.

(When reassembling)

- After mounting the front axle assembly to the front axle frame, be sure to adjust the front axle rocking force. (See page 6-S5.)

Tightening torque	Front wheel mounting nut	77.5 to 90.1 N·m 7.9 to 9.2 kgf·m 57.1 to 66.5 ft-lbs
	Front hitch stay mounting nut	124 to 147 N·m 12.6 to 15.0 kgf·m 91.1 to 108.5 ft-lbs
	Front axle bracket mounting screw	124 to 147 N·m 12.6 to 15.0 kgf·m 91.1 to 108.5 ft-lbs

(1) Front Hitch Stay (2) Nut

W10140910

(B) 4 Wheel Drive with Bi-speed Turn Model (B2110 DB, B2110HDB, B2410DB, B2410HDB, B2710HDB)

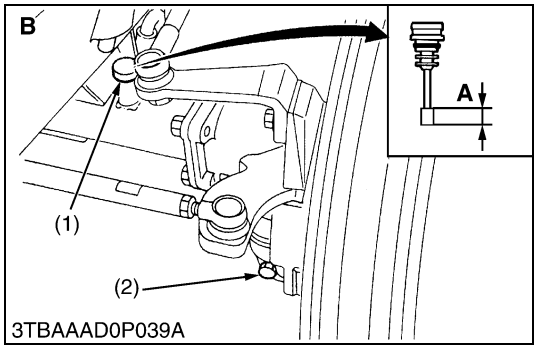

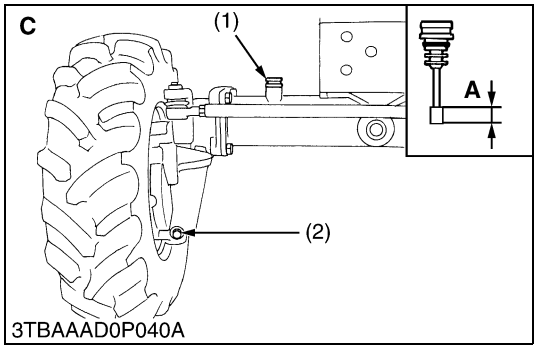

Draining Front Axle Case Oil

1. Place oil pans underneath the front axle case.
2. Remove both right and left drain plugs (2) and filling plug (1) to drain the oil.
3. Remove the right and left breather plugs.
4. After draining, reinstall the drain plugs (2), filling plug (1) and breather plugs.

■ **IMPORTANT**

- **Use KUBOTA SUPER UDT fluid or SAE80, 90 gear oil. Refer to "LUBRICANTS, FUEL AND COOLANT". (See page G-8.)**

Front axle case oil capacity	B2110 B2410	4.5 L 4.8 U.S.qts. 4.0 Imp.qts.
	B2710	5.3 L 5.6 U.S.qts. 4.7 Imp.qts.

(1) Filling Plug with Dipstick
(2) Drain Plug

A : Oil level is acceptable within this range.
B : B2110, B2410
C : B2710

W10144420

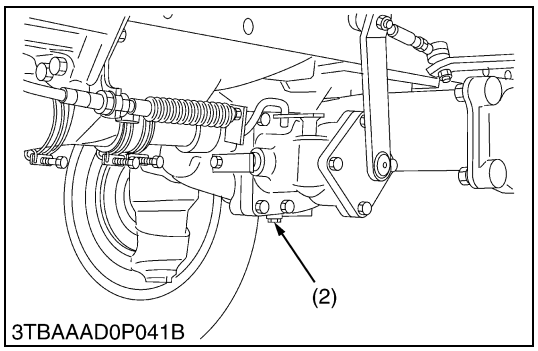

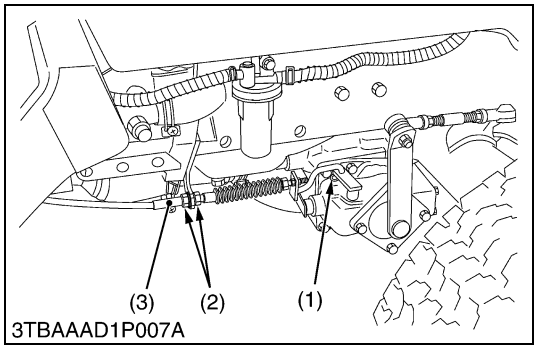

Bi-speed Turn Cable

1. Remove the spring lock pin (1) and loosen the lock nuts (2) and then remove the bi-speed turn cable (3).

(When reassembling)

- When reassembling the bi-speed turn cable (3), make sure the distance **A**.

Distance **A**	Factory spec.	B2110 B2410	18 mm 0.71 in.
		B2710	16 mm 0.63 in.

(Reference)

Distance **B**	Factory spec.	B2110 B2410	10 mm 0.39 in.
		B2710	8 mm 0.31 in.

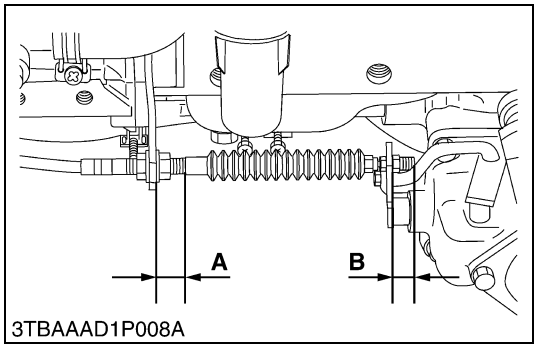

(1) Spring Lock Pin
(2) Lock Nut
(3) Bi-speed Turn Cable

W10382830

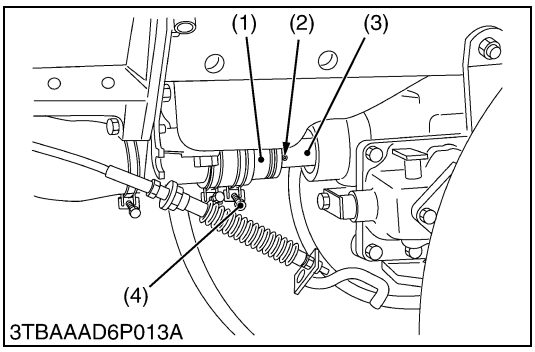

3TBAAAD6P013A

Propeller Shaft

1. Loosen the clamp (4) and slide the propeller shaft cover (1) to the rear.
2. Tap out the spring pin (2) and then slide the coupling (3) to the rear.

(When reassembling)

- Apply grease to the splines of the propeller shaft.

(1) Propeller Shaft Cover
(2) Spring Pin
(3) Coupling
(4) Clamp

0

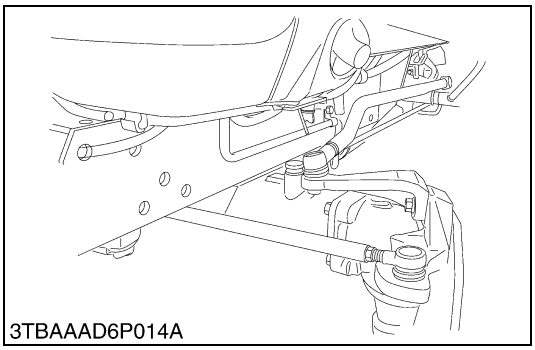
3TBAAAD6P014A

Drag Link

1. Steer the front wheels to the left.
2. Remove the slotted nut and disconnect the drag link from the knuckle arm.

■ **IMPORTANT**

- **After tightening the slotted nut to the specified torque, install the cotter pin as shown in the figure left.**

Tightening torque	Slotted nut	17.7 to 34.3 N·m 1.8 to 3.5 kgf·m 13.0 to 25.3 ft-lbs

W10152700

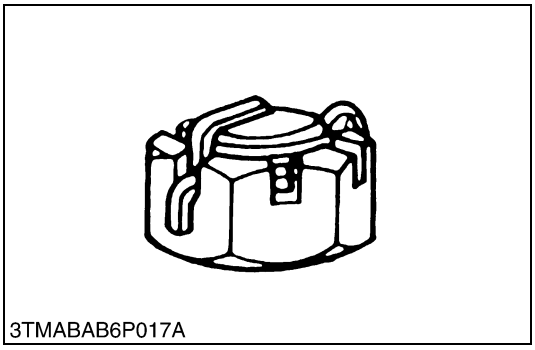
3TMABAB6P017A

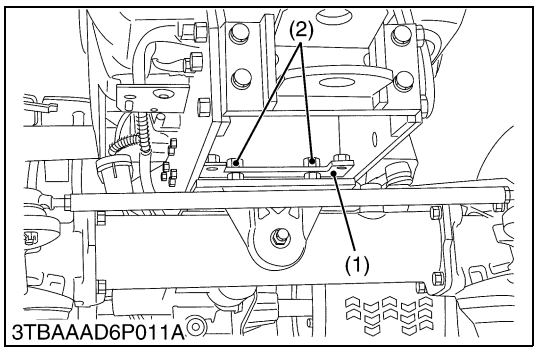

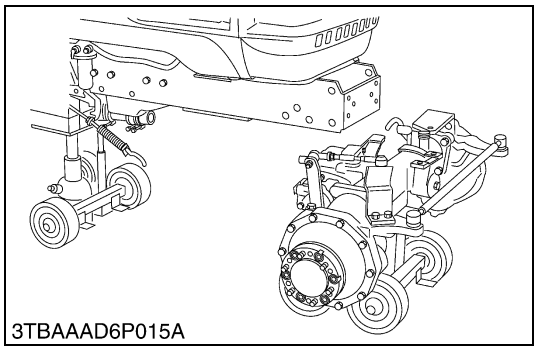

Front Axle

1. Place the jack under the clutch housing.
2. Place the jack under the front axle.
3. Remove the front wheels.
4. Remove the front hitch stay mounting nuts (2) and remove the front hitch stay (1).
5. Remove the front axle brackets (Front and Rear) mounting screws.
6. Separate the front axle from the front axle frame.

(When reassembling)

- After mounting the front axle assembly to the front axle frame, be sure to adjust the front axle rocking force. (See page 6-S5.)

Tightening torque	Front wheel mounting nut		77.5 to 90.1 N·m 7.9 to 9.2 kgf·m 57.1 to 66.5 ft-lbs
	Front axle bracket mounting screw	B2110 B2410	124 to 147 N·m 12.6 to 15.0 kgf·m 91.1 to 108.5 ft-lbs
		B2710	200 to 230 N·m 20.4 to 23.5 kgf·m 148 to 169 ft-lbs
	Front hitch stay mounting nut	B2110 B2410	124 to 147 N·m 12.6 to 15.0 kgf·m 91.1 to 108.5 ft-lbs
		B2710	200 to 230 N·m 20.4 to 23.5 kgf·m 148 to 169 ft-lbs

(1) Front Hitch Stay (2) Nut

W10154650

(2) Disassembling Front Axle Assembly

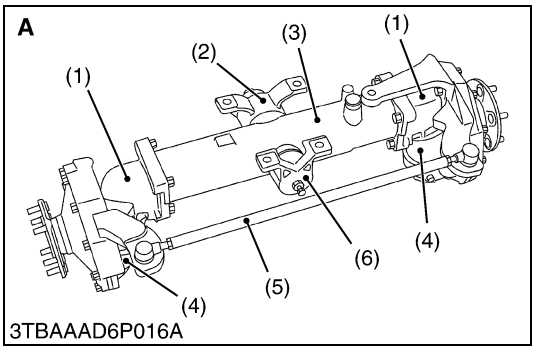

3TBAAAD6P016A

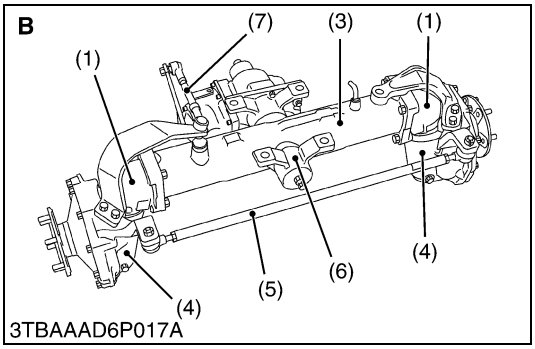

3TBAAAD6P017A

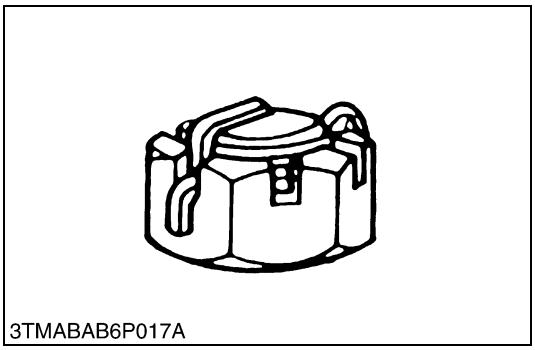
3TMABAB6P017A

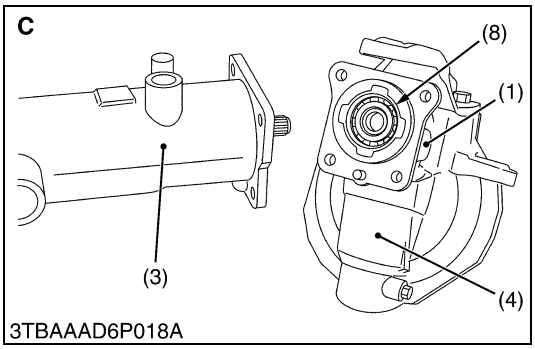

3TBAAAD6P018A

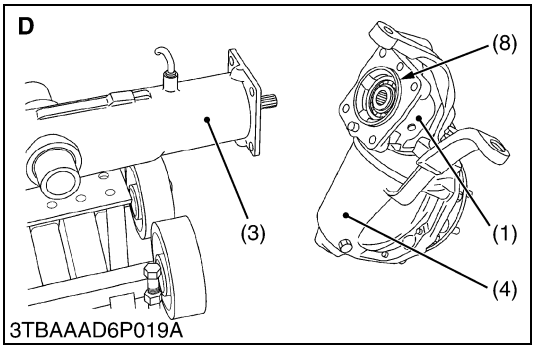

3TBAAAD6P019A

Tie-rod and Bevel Gear Case Assembly

1. Remove the bi-speed turn rod (7). (Bi-speed Model)
2. Remove the slotted nut and disconnect the tie-rod (5) from the front gear case (4).
3. Remove the front axle bracket rear (2) (without bi-speed turn model) and front axle bracket front (6).
4. Remove the bevel gear case mounting screws.
5. Remove the bevel gear case (1) and front gear case (4) as a unit from the front axle case (3).

(When reassembling)

- Apply grease to the thrust collar of front axle bracket.
- Apply grease to the O-ring (8) and take care not to damage it.
- Do not interchange right and left bevel gear case assemblies.
- After tightening the slotted nut to the specified torque, install the cotter pin as shown in the figure.

Tightening torque	Bevel gear case mounting screw	77.5 to 90.1 N·m 7.9 to 9.2 kgf·m 57.1 to 66.5 ft-lbs

(1) Bevel Gear Case
(2) Front Axle Bracket Rear
(3) Front Axle Case
(4) Front Gear Case
(5) Tie-rod
(6) Front Axle Bracket Front
(7) Bi-speed Turn Rod
(8) O-ring

A : Without Bi-speed Model
B : Bi-speed Model
C : B1710, B2110, B2410
D : B2710

W10157690

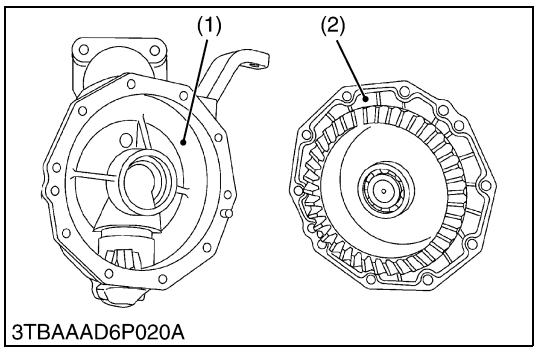

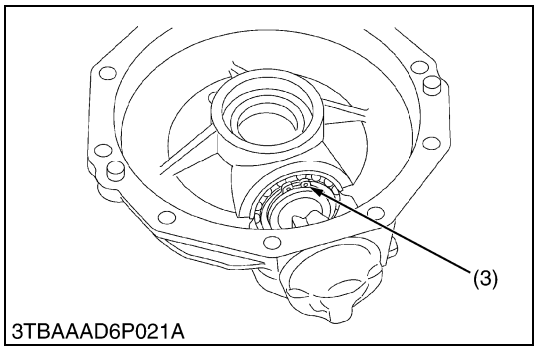

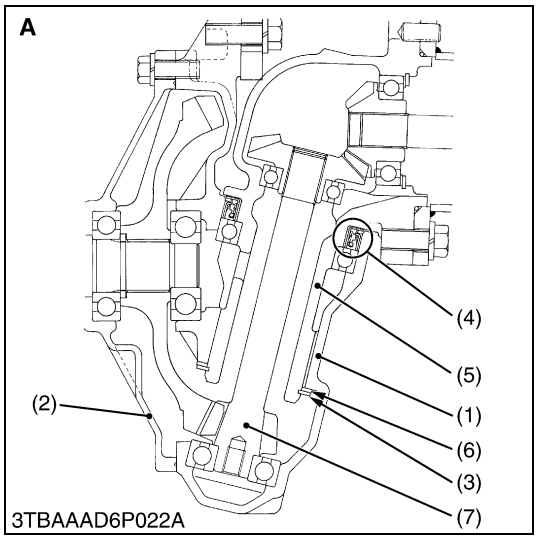

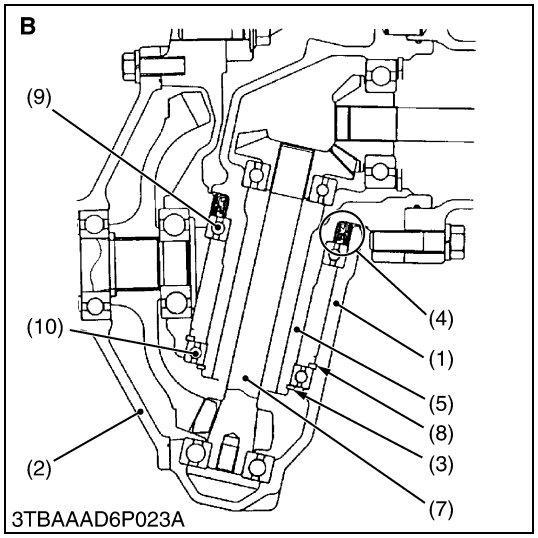

Front Gear Case

1. Remove the knuckle arm (Left side only).
2. Remove the axle flange (2).
3. Remove the external snap ring (3).
4. Remove the bevel gear case (5) from front gear case (1).
5. Remove the oil seal (4). (B2710)
6. Remove the ball bearing 1 (9). (B2710)
7. Remove the internal snap ring (8) and remove the ball bearing 2 (10). (B2710)
8. Remove the bevel gear shaft (7) with ball bearing.

(When reassembling)

- Apply liquid gasket (Three Bond 1208D or equivalent) to joint face of the axle flange (2) and front gear case (1) after eliminate the water, oil and stuck liquid gasket.
- Tighten the axle flange mounting screws and nuts diagonally in several steps.
- Install the oil seal (4) of bevel gear case, noting its direction as shown in the figure.

Tightening torque	Knuckle arm mounting screw	103.0 to 117.7 N·m 10.5 to 12.0 kgf·m 76.0 to 86.8 ft-lbs
	Axle flange mounting screw	48.1 to 55.9 N·m 4.9 to 5.7 kgf·m 35.5 to 41.2 ft-lbs

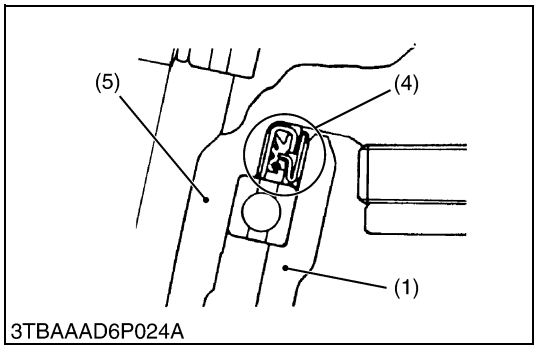

(1) Front Gear Case
(2) Axle Flange
(3) External Snap Ring
(4) Oil Seal
(5) Bevel Gear Case
(6) Thrust Collar
(7) Bevel Gear Shaft
(8) Internal Snap Ring
(9) Ball Bearing 1
(10) Ball Bearing 2

A : B1710, B2110, B2410
B : B2710

W10164150

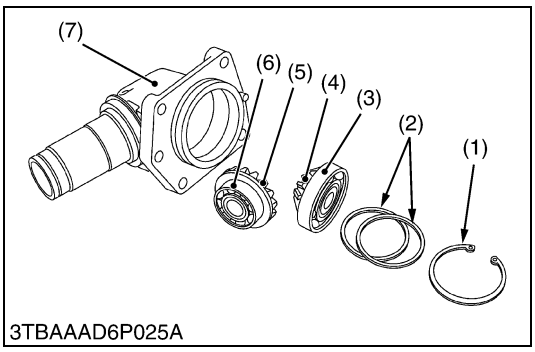

3TBAAAD6P025A

Bevel Gear Case Gears

1. Remove the internal snap ring (1).
2. Take out the bevel gears (4), (5) with ball bearings (3), (6) and shims (2).

(When reassembling)

- Install the shims (2) to their original position.

(Reference)

- Thickness of adjusting shims :
  0.8 mm (0.031 in.), 1.0 mm (0.039 in.), 1.2 mm (0.047 in.)

(1) Internal Snap Ring
(2) Shim
(3) Ball Bearing
(4) Bevel Gear
(5) Bevel Gear
(6) Ball Bearing
(7) Bevel Gear Case

W10170240

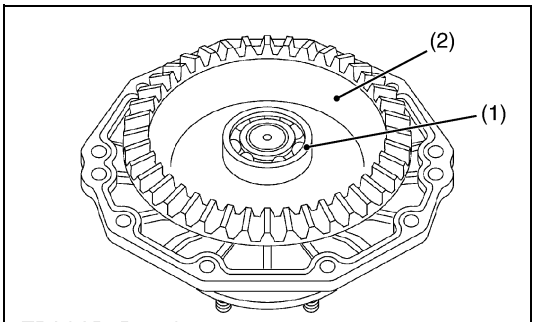

3TBAAAD6P026A

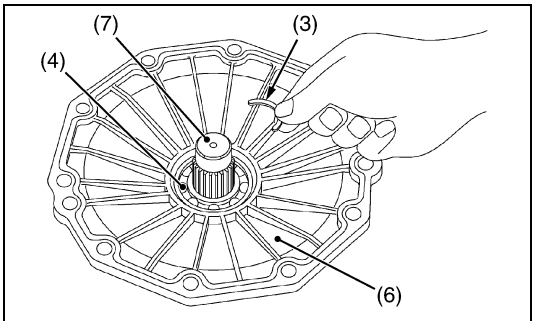

3TBAAAD6P027A

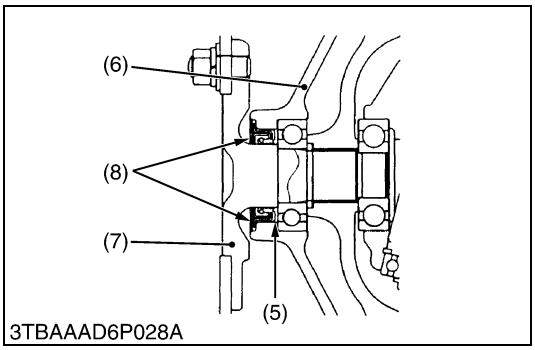

3TBAAAD6P028A

Axle

1. Remove the bearing (1).
2. Take out the bevel gear (2).
3. Take out the collar (3).
4. Tap out the axle (7).

(When reassembling)

- Install the oil seal (8) of axle flange (6), noting its direction as shown in the figure.
- Install the shims (5) to their original position. (B2710)

(Reference)

- Thickness of adjusting shims :
  0.2 mm (0.008 in.), 0.3 mm (0.012 in.)

(1) Ball Bearing
(2) Bevel Gear
(3) Collar
(4) Ball Bearing
(5) Shim
(6) Axle Flange
(7) Axle
(8) Oil Seal

W10173030

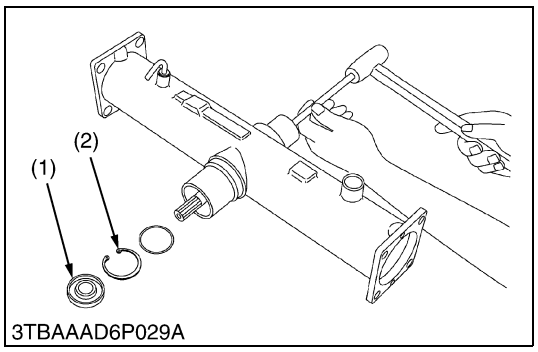

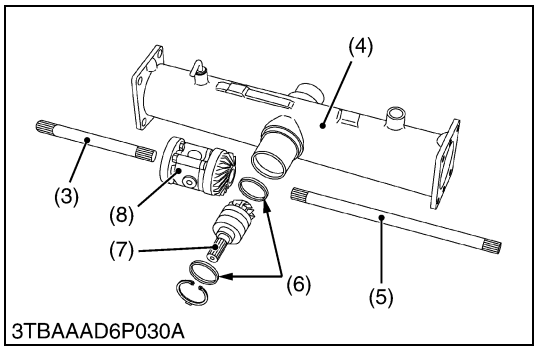

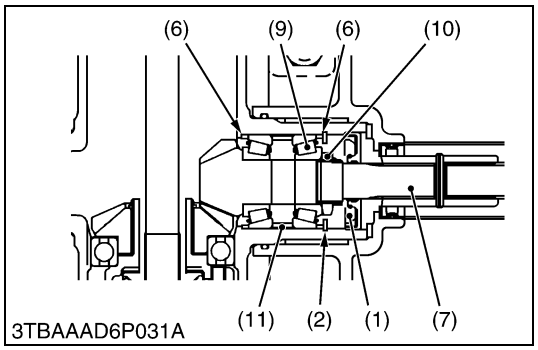

Spiral Bevel Pinion Shaft and Differential Gear Assembly

1. Take out the differential yoke shaft (3), (5).
2. Remove the oil seal (1).
3. Remove the internal snap ring (2).
4. Tap out the spiral bevel pinon shaft (7) by the brass rod and hammer.
5. Take out the differential gear assembly (8), from right side of front axle case (4).
6. Remove the stake of lock nut (10), and then remove the lock nut (10).
7. Remove the taper roller bearings (9).

(When reassembling)

- Apply gear oil to the taper roller bearings (9) and install them correctly, noting their direction.
- Replace the lock nut (10) and oil seal (1) with new ones.
- After tighten the lock nut (10) to the specified torque, stake it firmly.
- Install the adjusting collars (6) to their original position.

(Reference)

- Thickness of adjusting collars :

3.4 mm (0.134 in.)	4.1 mm (0.161 in.)
3.6 mm (0.142 in.)	4.2 mm (0.165 in.)
3.8 mm (0.150 in.)	4.4 mm (0.173 in.)
4.0 mm (0.157 in.)	4.6 mm (0.181 in.)

(1) Oil Seal
(2) Internal Snap Ring
(3) Differential Yoke Shaft LH
(4) Front Axle Case
(5) Differential Yoke Shaft RH
(6) Adjusting Collar
(7) Spiral Bevel Pinion Shaft
(8) Differential Gear Assembly
(9) Taper Roller Bearing
(10) Lock Nut
(11) Collar

W10175500

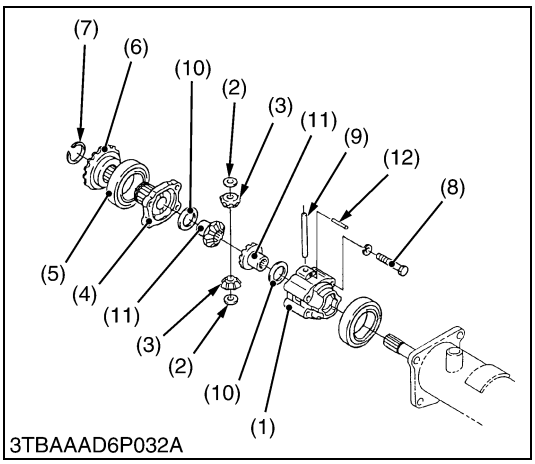

Differential Gear

1. Remove the differential case cover mounting screws (8) and then take out the differential case cover (4), ball bearing (5) and spiral bevel gear (6) as a unit.
2. Remove the external snap ring (7), and then remove the ball bearing (5) and spiral bevel gear (6) as a unit with a puller.
3. Remove the straight pin (12).
4. Pull out the pinion shaft (9) and take out the differential pinions (3) and differential side gears (11).

■ **NOTE**

- **Arrange the parts to know their original position.**

(When reassembling)

- Apply molybdenum disulfide (Three Bond 1901 or equivalent) to the inner circumferential surface of the differential side gears (11) and differential pinions (3).
- Install the pinion shaft (9) so that the hole on it may align with the hole on differential case (1), and install the straight pin (12).

Tightening torque	Differential case cover mounting screw	29.4 to 34.3 N·m 3.0 to 3.5 kgf·m 21.7 to 25.3 ft-lbs

(1) Differential Case
(2) Thrust Collar
(3) Differential Pinion
(4) Differential Case Cover
(5) Ball Bearing
(6) Spiral Bevel Gear
(7) External Snap Ring
(8) Screws
(9) Pinion Shaft
(10) Shim
(11) Differential Side Gear
(12) Straight Pin

W10180440

(3) Disassembling Bi-speed Turn Case

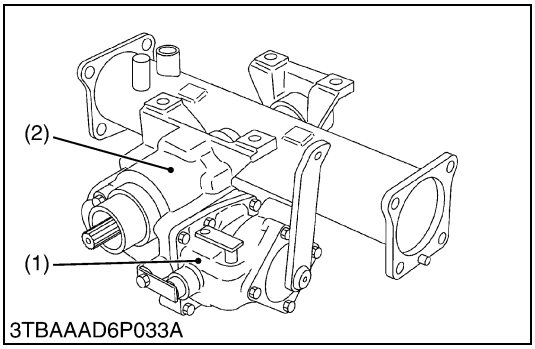

Separation of Bi-speed Turn Case

1. Remove the bi-speed turn case mounting screws and separate the bi-speed turn case (1) from the bi-speed turn gear case (2).

(When reassembling)

- Apply liquid gasket (Three Bond 1208D or equivalent) to joint face of the bi-speed turn case (1) and bi-speed turn gear case.
- Install the bi-speed turn case to the bi-speed turn gear case, noting the position of shifter collar. (Place the shifter collar between shift fork and shifter)
- After shifting the bi-speed turn shifter to the spiral bevel pinion shaft side, mount the shift fork on the shifter and install the case to the gear case.

Tightening torque	Bi-speed turn case mounting screw	23.6 to 27.4 N·m 2.4 to 2.8 kgf·m 17.4 to 20.2 ft-lbs

(1) Bi-speed Turn Case
(2) Bi-speed Turn Gear Case

W10183530

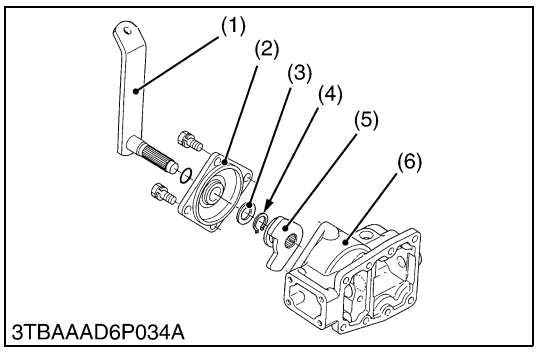

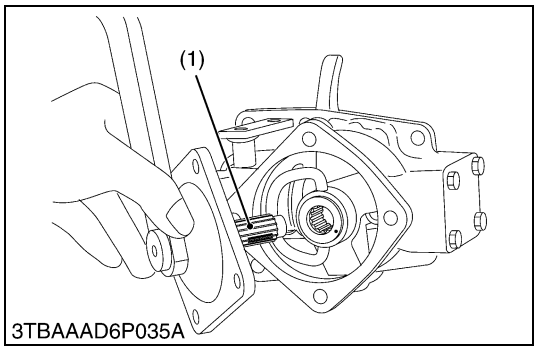

Shift Cam

1. Remove the case cover (2) with the shift lever and shift cam (5).
2. Remove the external snap ring (4) and collar (3).
3. Remove the shifter lever (1).

■ **NOTE**

- **The white marks is painted on the shift lever (1) for aligning the shift cam.**

(When reassembling)

- Apply liquid gasket (Three Bond 1208D or equivalent) to joint face of the bi-speed turn case (6) and case cover (2).
- When installing the shift cam, be sure to align the marks on the shift cam and shift lever.

Tightening torque	Case cover mounting screw	17.7 to 20.5 N·m 1.8 to 2.1 kgf·m 13.0 to 15.2 ft-lbs

(1) Shift Lever
(2) Case Cover
(3) Collar
(4) External Snap Ring
(5) Shift Cam
(6) Bi-speed Turn Case

W10185060

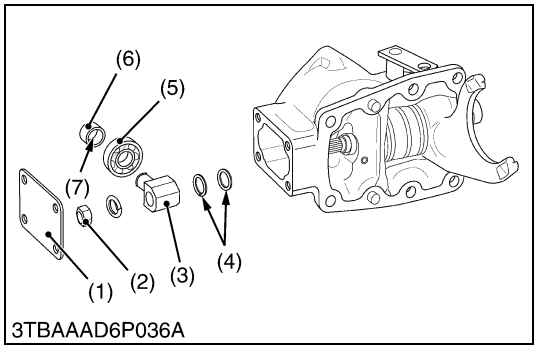

Shift Roller Shaft

1. Remove the cover (1).
2. Remove the nut (2) and the shift roller shaft assembly.
3. Tap out the shift roller shaft (3), while holding the bearing (5) to remove the shift roller (6). The retainer ring (7) is mounted inside of the roller.

(When reassembling)

- Apply liquid gasket (Three Bond 1208D or equivalent) to joint face of the cover (1) and bi-speed turn case.

(1) Cover
(2) Nut
(3) Shift Roller Shaft
(4) Adjusting Shim
(5) Ball Bearing
(6) Shift Roller
(7) Retainer Ring

W10188220

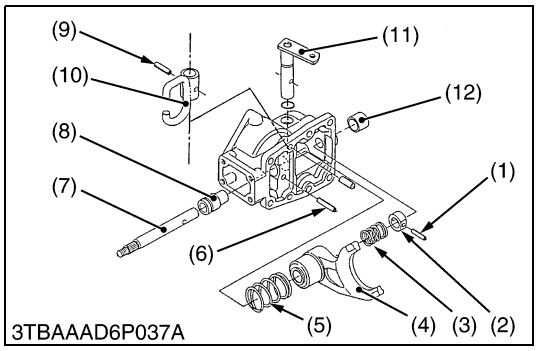

Shift Fork, Shift Rod and Change Lever

1. Push the shift fork to the front till the spring pin (2) can be seen and tap out the spring pin (1).
2. Remove the cap (12) and tap out the shift rod (7) to the front.
3. Tap out the spring pin (6).
4. Tap out the shift rod collar (8) by the rod to the front.
5. Take out the shift fork (4), springs (3), (5) and pressure collar (2) together.
6. Tap out the spring pin (9), using the screw hole for the fulcrum mounting screw on the case. Remove the change lever (11) and change fork (10)

(When reassembling)

- Apply adhesive to the cap.

(1) Spring Pin
(2) Pressure Collar
(3) Spring
(4) Shift Fork
(5) Spring
(6) Spring Pin
(7) Shift Rod
(8) Shift Rod Collar
(9) Spring Pin
(10) Change Fork
(11) Change Lever
(12) Cap

W10189930

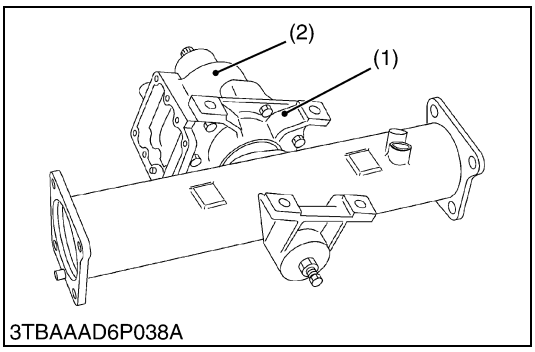

3TBAAAD6P038A

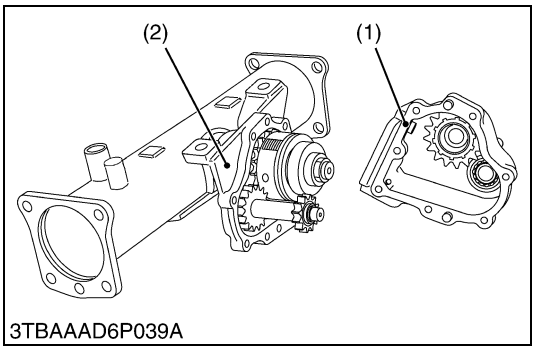

3TBAAAD6P039A

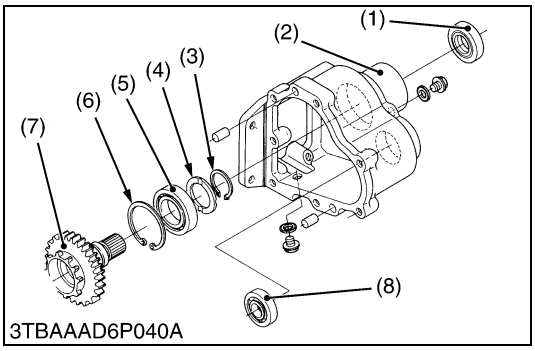

3TBAAAD6P040A

Separation of Bi-speed Turn Gear Case

1. Remove the bi-speed turn gear case mounting screws (1).
2. Separate the bi-speed turn gear case (2) from the bearing holder (3).

(When reassembling)

- Apply liquid gasket (Three Bond 1208D or equivalent) to the bi-speed turn gear case.

Tightening torque	Bi-speed turn gear case mounting screw	23.6 to 27.4 N·m 2.4 to 2.8 kgf·m 17.4 to 20.2 ft-lbs

(1) Bi-speed Turn Gear Case
(2) Bearing Holder

W10192330

Ball Bearing and Oil Seal

1. Remove the oil seal (1) and remove the external snap ring (3) and thrust collar (4).
2. Tap out the gear shaft (7).
3. Remove the internal snap ring (6) and remove the ball bearing (5) from the bi-speed turn gear case (2).
4. Remove the ball bearing (8) from the bi-speed turn gear case (2).

(When reassembling)

- Apply grease to the oil seal.

(1) Oil Seal
(2) Bi-speed Turn Gear Case
(3) External Snap Ring
(4) Thrust Collar
(5) Ball Bearing
(6) Internal Snap Ring
(7) Gear Shaft
(8) Ball Bearing

W10194640

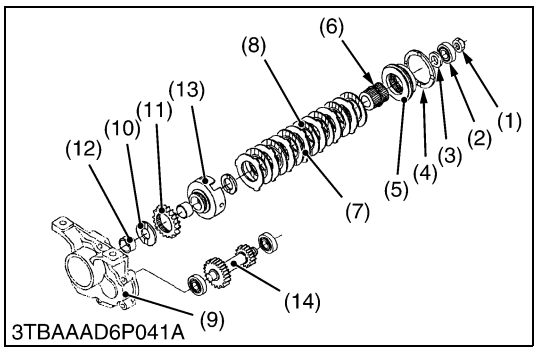

Bi-speed Turn Clutch Assembly

1. Put back the stakes of the nut (1) and remove it.
2. Pull out the ball bearing (2) with a puller and remove the plain washer (3) shifter collar (4) and shifter (5).
3. Remove the bi-speed turn coupling (6), clutch discs (7), friction plates (8), and bi-speed turn clutch drum (13).
4. Remove the thrust collar (10), bi-speed turn gear (11) and inner ring (12) from the bi-speed turn clutch drum (13).
5. Remove the gear shaft (14).

(When reassembling)

- Apply molybdenum desulphid (Three Bond 1901 or equivalent) to the inner ring.
- Replace the staking nut with a new one and after checking the turning torque of staking nut (1), be sure to stake it.
- After installing the gear shaft (14) with the bearing, reinstall the bi-speed turn clutch assembly.

Tightening torque	Staking nut	29.4 to 34.3 N·m 3.0 to 3.5 kgf·m 21.7 to 25.3 ft-lbs

■ **IMPORTANT**

- **After tightening the staking nut (1) to the specified torque, be sure to check the turning torque (0.8 to 1.0 N·m, 0.08 to 0.10 kgf·m, 0.59 to 0.73 ft-lbs) of spiral bevel pinion shaft assembly.**

(1) Nut
(2) Ball Bearing
(3) Plain Washer
(4) Shifter Collar
(5) Shifter
(6) Bi-speed Turn Coupling
(7) Clutch Disc
(8) Friction Plate
(9) Bearing Holder
(10) Thrust Collar
(11) Bi-speed Turn Gear
(12) Inner Ring
(13) Bi-speed Turn Clutch Drum
(14) Gear Shaft

W10196410

[3] SERVICING

(1) Differential Gears, Spiral Bevel Pinion, Bevel Gear Case and Bracket

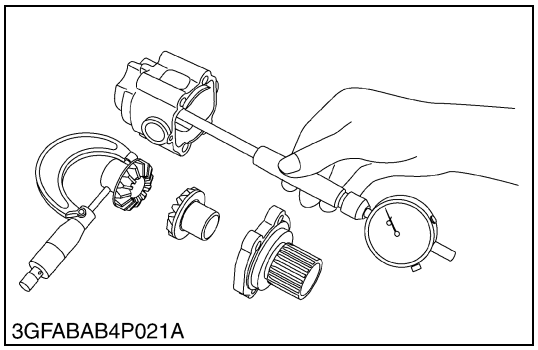

Clearance between Differential Case (Differential Case Cover) and Differential Side Gear

1. Measure the differential side gear boss O.D..
2. Measure the differential case bore I.D., and calculate the clearance.
3. Measure the differential case cover bore I.D., and calculate the clearance.
4. If the clearance exceeds the allowable limit, replace faulty parts.

Clearance between differential case (differential case cover) and differential side gear	Factory spec.	0.040 to 0.082 mm 0.00157 to 0.00323 in.
	Allowable limit	0.17 mm 0.0067 in.

Differential case bore I.D.	Factory spec.	26.000 to 26.021 mm 1.02362 to 1.02445 in.
Differential case cover bore I.D.	Factory spec.	26.000 to 26.021 mm 1.02362 to 1.02445 in.
Differential side gear O.D.	Factory spec.	25.939 to 25.960 mm 1.02122 to 1.02205 in.

W10200270

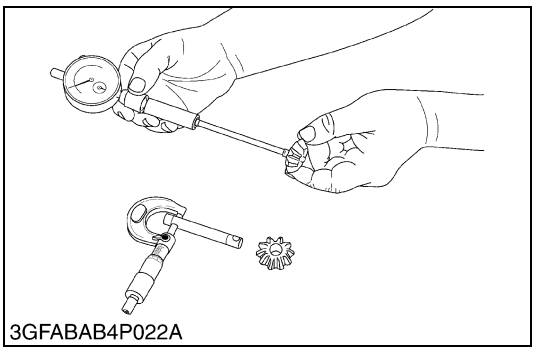
3GFABAB4P022A

Clearance between Differential Pinion Shaft and Differential Pinion

1. Measure the differential pinon shaft O.D..
2. Measure the differential pinion I.D., and calculate the clearance.
3. If the clearance exceeds the allowable limit, replace faulty parts.

Clearance between differential pinion shaft and differential pinion	Factory spec.	0.038 to 0.068 mm 0.00150 to 0.00268 in.
	Allowable limit	0.17 mm 0.0067 in.

Differential pinion shaft O.D.	Factory spec.	9.972 to 9.987 mm 0.39260 to 0.39312 in.
Differential side gear I.D.	Factory spec.	10.025 to 10.040 mm 0.39469 to 0.39528 in.

W10202180

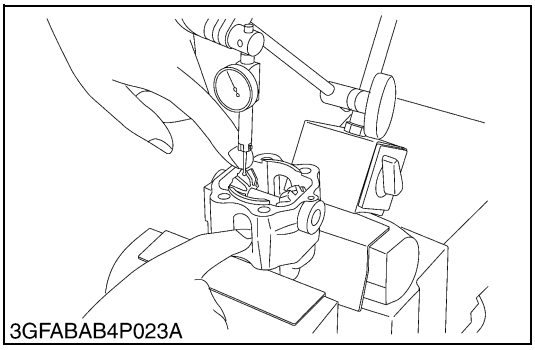
3GFABAB4P023A

Backlash between Differential Pinion and Differential Side Gear

1. Set a dial gauge (lever type) on a tooth of the differential pinion.
2. Fix the differential side gear, and move the differential pinion to measure the backlash.
3. If the measurement exceeds the factory specifications, adjust with the differential side gears shims.

Backlash between differential pinion and differential side gear	Factory spec.	0.1 to 0.3 mm 0.004 to 0.012 in.

(Reference)

- Thickness of adjusting shims :
  0.8 mm (0.031 in.), 1.0 mm (0.039 in.), 1.2 mm (0.047 in.)

W10205210

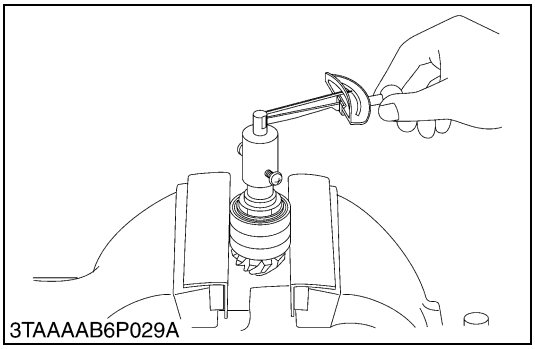
3TAAAAB6P029A

Turning Torque of Spiral Bevel Pinion Shaft

1. Cramp the spiral bevel pinion shaft assembly to the vise and tighten the staking nut.
2. measure the turning torque of bevel pinion shaft.
3. If the turning torque is not within the factory specifications, adjust with the lock nut.

Turning torque	Factory spec.	0.8 to 1.0 N·m 0.08 to 0.10 kgf·m 0.59 to 0.73 ft-lbs

■ **NOTE**

- **After turning force adjustment, be sure to stake the lock nut.**

W10206520

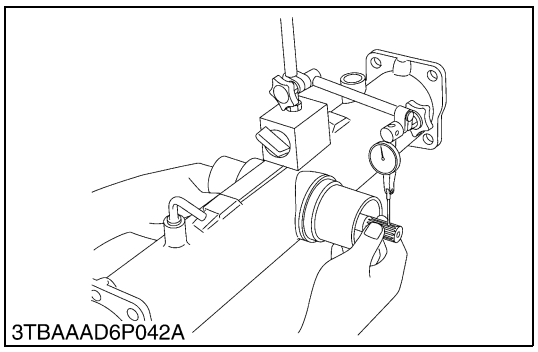
3TBAAAD6P042A

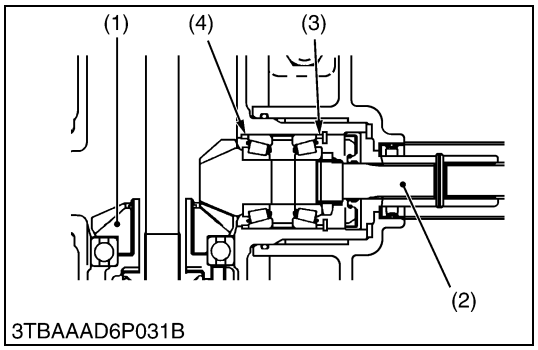

3TBAAAD6P031B

Backlash between Spiral Bevel Pinion Shaft and Spiral Bevel Gear

1. Set a dial gauge (lever type) with its finger on the spline of spiral bevel pinion shaft.
2. Measure the backlash be moving the spiral bevel pinon shaft by hand lightly.
3. If the backlash is not within the factory specifications, change the adjusting collars (3), (4). For example change the adjusting collar (4) to 0.1 mm (0.004 in.) smaller size, and change the adjusting collar (3) to 0.1 mm (0.004 in.) larger size.
4. Adjust the backlash properly by repeating the above procedures.

Backlash between spiral bevel pinoin shaft and spiral bevel gear	Factory spec.	0.10 to 0.30 mm 0.0039 to 0.0118 in.

(Reference)

- Above factory specification should be measured on the tooth of spiral bevel pinion. When measuring the backlash on the spline of its shaft, factory specification will be 0.0571 to 0.1714 mm (0.00225 to 0.00675 in.).
- Thickness of adjusting collars (3), (4) :
  3.4 mm (0.134 in.) 4.1 mm (0.161 in.)
  3.6 mm (0.142 in.) 4.2 mm (0.165 in.)
  3.8 mm (0.150 in.) 4.4 mm (0.173 in.)
  4.0 mm (0.157 in.) 4.6 mm (0.181 in.)

(1) Spiral Bevel Gear
(2) Spiral Bevel Pinion Shaft
(3) Adjusting Collar
(4) Adjusting Collar

W10207820

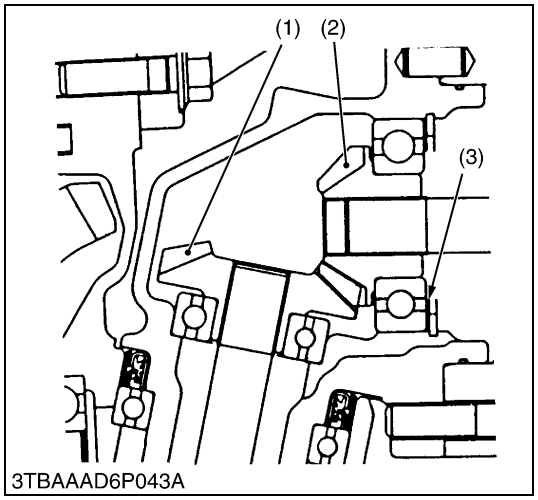

3TBAAAD6P043A

Backlash between 11T Bevel Gear and 16T Bevel Gear

1. Stick a strip of fuse to three spots on the 16T bevel gear (1) with grease.
2. Fix the front axle case, bevel gear case and front gear case.
3. Turn the axle.
4. Remove the bevel gear case from front axle case and measure the thickness of the fuses with an outside micrometer.
5. If the backlash is not within the factory specifications, adjust with shim (3).

Backlash between 11T bevel gear and 16T bevel gear	Factory spec.	0.10 to 0.30 mm 0.0039 to 0.0118 in.

(Reference)

- Thickness of adjusting shims (3) :
  0.8 mm (0.031 in.) 1.2 mm (0.047 in.)
  1.0 mm (0.039 in.) 1.4 mm (0.055 in.)
- Tooth contact : More than 35 %

(1) 16T Bevel Gear
(2) 11T Bevel Gear
(3) Shim

W10211780

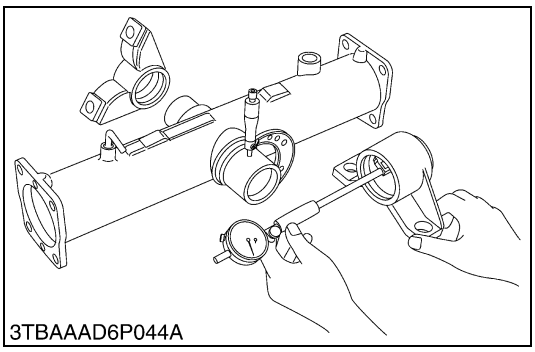
3TBAAAD6P044A

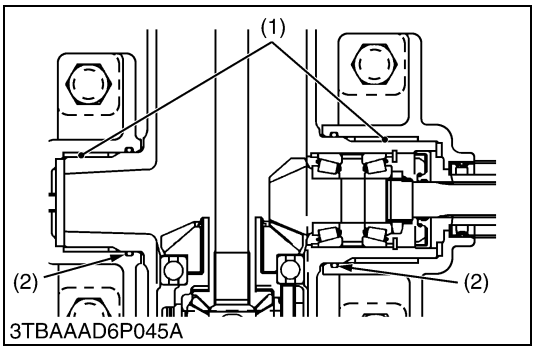

3TBAAAD6P045A

Clearance between Front Axle Case Bosses and Bracket Bushing

1. Measure the front axle case bosses O.D. with an outside micrometer.
2. Measure the bracket Bushing I.D. with a cylinder gauge, and calculate the clearance.
3. If the clearance exceeds the allowable limit, replace the bracket bushing.
4. If the clearance still exceeds the allowable limit, replace the front axle case.

Clearance between front axle case boss (front) and bracket bushing (front)	Factory spec.	0.125 to 0.280 mm 0.00492 to 0.01102 in.
	Allowable limit	0.45 mm 0.0177 in.

Front axle case boss (front) O.D.	Factory spec.	49.950 to 49.975 mm 1.96653 to 1.96751 in.
Bracket bushing (front) I.D.	Factory spec.	50.100 to 50.230 mm 1.97243 to 1.97755 in.

Clearance between front axle case boss (rear) and bracket bushing (rear)	Factory spec.	0.090 to 0.250 mm 0.00354 to 0.00984 in.
	Allowable limit	0.45 mm 0.0177 in.

Front axle case boss (rear) O.D.	Factory spec.	64.940 to 64.970 mm 2.55669 to 2.55787 in.
Bracket bushing (rear) I.D.	Factory spec.	65.060 to 65.190 mm 2.56141 to 2.56653 in.

■ **Press-fitting Bushing**

- When replacing the bushings (1), press-fit it until bushing contact to inside of front axle case.
- Apply grease to the O-rings (2) and take care not to damage it.

■ **NOTE**

- **After replacing the bushing, be sure to adjust the front axle rocking force. (See page 6-S5.)**

(1) Bushing (2) O-ring

W10215790

(2) Bi-speed Turn System

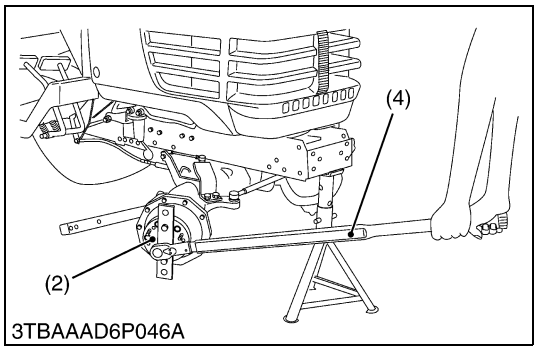

3TBAAAD6P046A

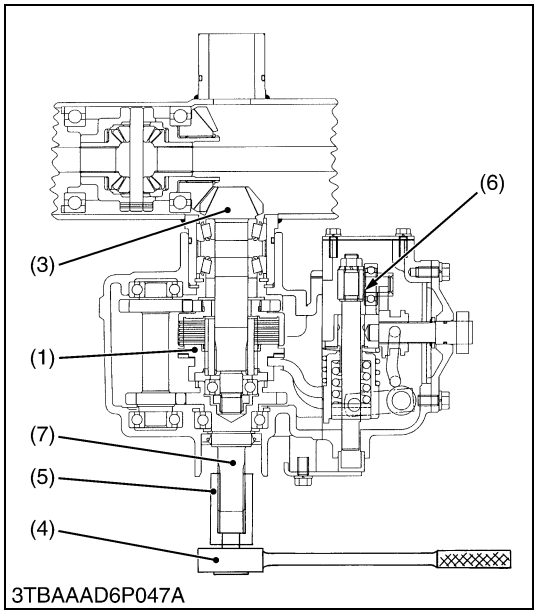

3TBAAAD6P047A

Bi-speed Turn Clutch Friction Torque

1. Lift up the front of tractor and set the stand.
2. Remove the front tires.
3. Shift the front wheel drive lever to **"ON"** position.
4. Shift the bi-speed turn lever to **"ON"** position.
5. Set the parking brake.
6. Fully turn the steering wheel to the left or right to set the bi-speed turn **"ON"** position.
7. Set the torque wrench (4) with the special jig on the front wheel hub (2) and set the special jig (locking bar) on the other side of front wheel hub.
8. Measure the torque, when the bi-speed turn clutch is slipped.
9. If the torque is not within the factory specifications, adjust it with the shims (6).

Dynamic friction torque of bi-speed turn clutch on the front wheel hub	Factory spec.	441.3 to 490.4 N·m 45 to 50 kgf·m 325.5 to 361.7 ft-lbs

(Reference)

- Thickness of shims :
  1.0 mm (0.039 in.), 1.5 mm (0.059 in.)
- When the dynamic friction torque of bi-speed turn clutch is measured on the gear shaft (7), its factory specifications as follows.

Dynamic friction torque of bi-speed turn clutch on the gear shaft	Factory spec.	79.4 to 96.01 N·m 8.10 to 9.79 kgf·m 58.6 to 70.81 ft-lbs

■ **NOTE**

- **Check the springs, clutch discs and friction plates if the correct torque can't be adjusted.**

(1) Bi-speed Turn Clutch
(2) Front Wheel Hub
(3) Spiral Bevel Pinion Shaft
(4) Torque Wrench
(5) Jig
(6) Shim
(7) Gear Shaft

W10220770

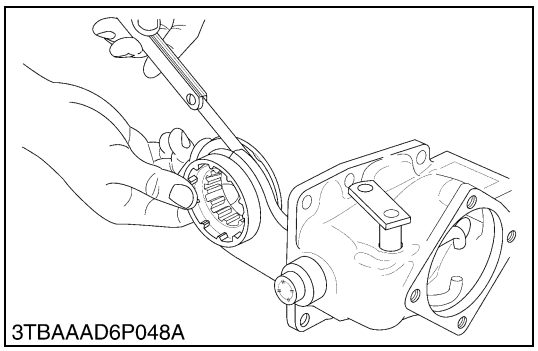
3TBAAAD6P048A

Clearance between Shift Fork and Shifter Groove

1. Place the shift fork in the shifter groove and measure the clearance with a feeler gauge.
2. If the clearance exceeds the allowable limit, replace.

■ **NOTE**

- **When measuring the clearance, be sure to place the shifter collar between the shift fork and shifter.**

Clearance between shift fork and shifter groove	Factory spec.	0.1 to 0.7 mm 0.004 to 0.028 in.
	Allowable limit	1.0 mm 0.04 in.

W10226940

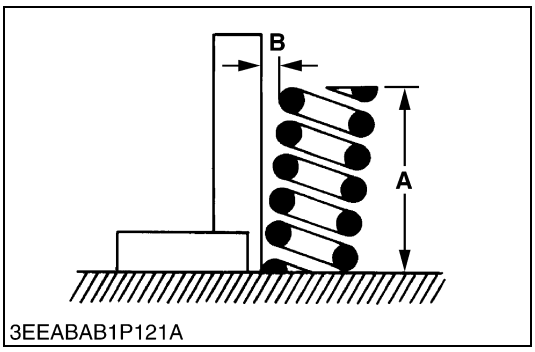

3EEABAB1P121A

Free Length of Bi-speed Turn Spring

1. Measure the free length of the spring with vernier calipers.
2. If the measurement is less than the allowable limit, replace it.

Free length (**A**) of bi-speed turn spring (short)	Factory spec.	32.5 to 32.6 mm 1.280 to 1.283 in.
	Allowable limit	28.5 mm 1.220 in.

Free length (**A**) of bi-speed turn spring (long)	Factory spec.	52.0 mm 2.047 in.
	Allowable limit	45.5 mm 1.791 in.

W10228360

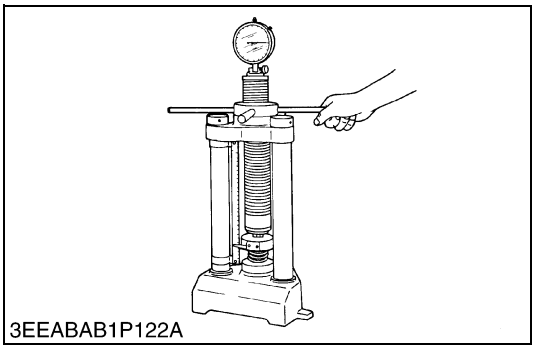
3EEABAB1P122A

Working Load of Bi-speed Turn Spring

1. Put the spring on the spring tester and compress it to the specified length.
2. Read the compression load on the gauge.
3. If the measurement is less than the allowable limit, replace it.

Working load of bi-speed turn spring (short)	Factory spec.	Load 1613 N / 25.5 mm 164.5 kgf / 25.5 mm 362.7 lbs / 1.00 in.
	Allowable limit	Load 1411 N / 25.5 mm 143.9 kgf / 25.5 mm 317.4 lbs / 1.00 in.

Working load of bi-speed turn spring (long)	Factory spec.	Load 86.3 N / 35.0 mm 8.8 kgf / 35.0 mm 19.4 lbs / 1.378 in.
	Allowable limit	Load 75.5 N / 35.0 mm 7.7 kgf / 35.0 mm 17.0 lbs / 1.378 in.

W10230560

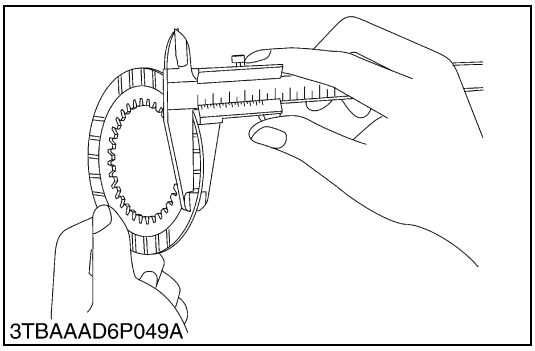
3TBAAAD6P049A

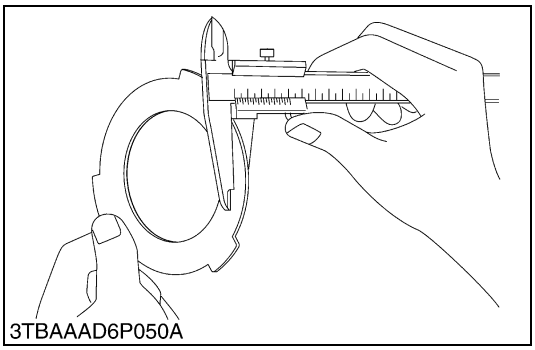
3TBAAAD6P050A

Clutch Disc Wear and Friction Plate Wear

1. Measure the thickness of the clutch disc and friction plate (steel plate) with vernier calipers.
2. If the thickness is less than the allowable limit, replace it.

(When reassembling)

- After keeping clutch discs in transmission oil for several seconds and apply transmission oil to friction plate, reassembling them in order.

Thickness of clutch disc	Factory spec.	1.7 to 1.9 mm 0.067 to 0.075 in.
	Allowable limit	1.4 mm 0.055 in.

Thickness of friction plate	Factory spec.	0.95 to 1.05 mm 0.037 to 0.075 in.
	Allowable limit	0.8 mm 0.0315 in.

W10232330

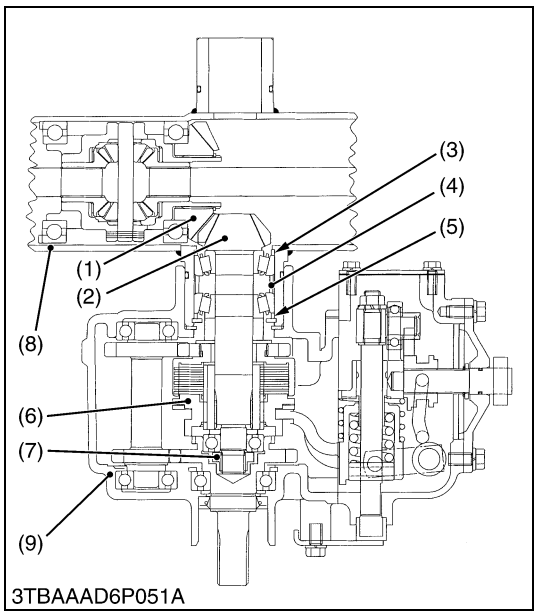

Turning Force of Spiral Bevel Pinion Shaft and Backlash between Spiral Bevel Pinion Shaft and Spiral Bevel Gear

1. Reassemble the spiral bevel pinion shaft (2) and bi-speed turn clutch assembly (6) and tighten and staking nut (7) to the minimum specified torque.

■ **IMPORTANT**

- **Before assemble the front axle case (8) and bi-speed turn case (9), noting the combination of the adjusting collars (3), (5) as shown below.**

	Thickness of collar	
	Collar (3)	Collar (5)
Combination 1	4.4 mm 0.173 in.	2.9 mm 0.112 in.
Combination 2	4.2 mm 0.165 in.	2.7 mm 0.106 in.
Combination 3	4.6 mm 0.181 in.	3.1 mm 0.122 in.

2. Measure the turning torque of spiral bevel pinion shaft.
3. If the measurement is not within the factory specifications, adjust with retightening the staking nut.
4. Stick the strip of fuse on the spiral bevel gear (1) with grease.
5. Carefully rotate the spiral bevel pinion shaft (2) on full turn.
6. Remove the fuse and measure the thickness of the fuse.
7. If the measurement is not within the factory specifications, change the adjusting collar (3), (4) and (5).
8. Adjust the backlash properly by repeating the above procedures.
9. After adjusting the backlash, stake the staking nut (7).

Turning torque	Factory spec.	0.8 to 1.0 N·m 0.08 to 0.10 kgf·m 0.59 to 0.73 ft-lbs

Tightening torque	Staking nut	27.4 to 34.3 N·m 3.0 to 3.5 kgf·m 21.7 to 25.3 ft-lbs

Backlash between spiral bevel pinion shaft and spiral bevel gear	Factory spec.	0.1 to 0.3 mm 0.004 to 0.012 in.

(1) Spiral Bevel Gear
(2) Spiral Bevel Pinion Shaft
(3) Collar
(4) Collar
(5) Collar
(6) Bi-speed Turn Clutch Assembly
(7) Staking Nut
(8) Front Axle Case
(9) Bi-speed Turn Case

W10233900

7 STEERING

MECHANISM

CONTENTS

1. HYDRAULIC PUMP 7-M1
2. HYDRAULIC CIRCUIT FOR POWER STEERING SYSTEM 7-M2
3. POWER STEERING BODY 7-M3
4. OIL FLOW 7-M4

1. HYDRAULIC PUMP

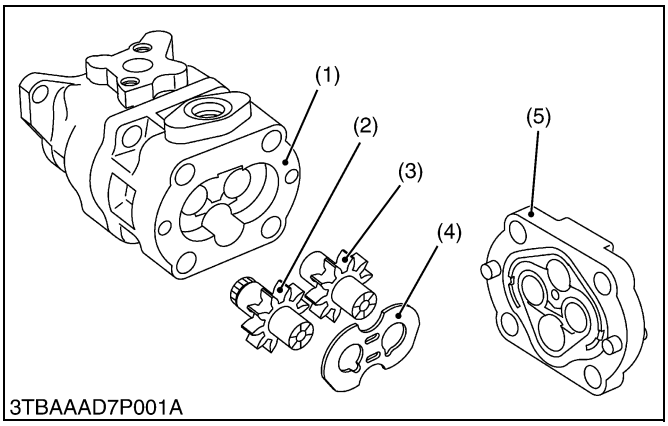

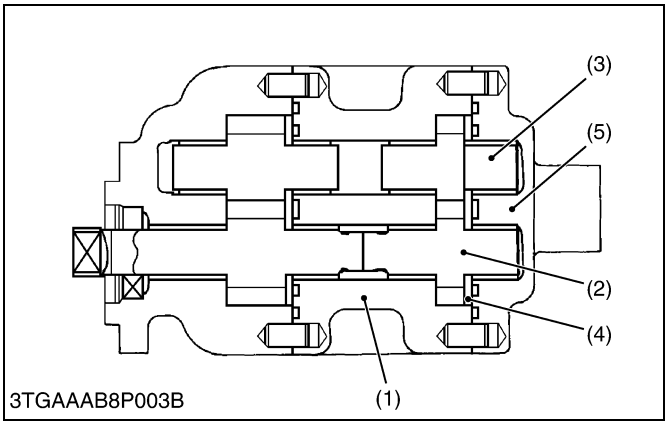

The hydraulic pump is composed of the casing (1), cover (5), side plate (4), and two spur gears (drive gear (2) and driven gear (3)) that are in mesh.

Hydraulic pump is driven by the fuel camshaft.

Maximum displacement is as follows.

	Displacement	Engine speed	Condition
B1710 B2110 B2410	9.8 L/min. 2.6 U.S.gal/min. 2.2 Imp.gal/min.	At 2600 rpm	at no load
B2710	11.7 L/min. 3.1 U.S.gal/min. 2.6 Imp.gal/min.		

(1) Casing
(2) Drive Gear
(3) Driven Gear
(4) Side Plate
(5) Cover

W10126560

2. HYDRAULIC CIRCUIT FOR POWER STEERING SYSTEM

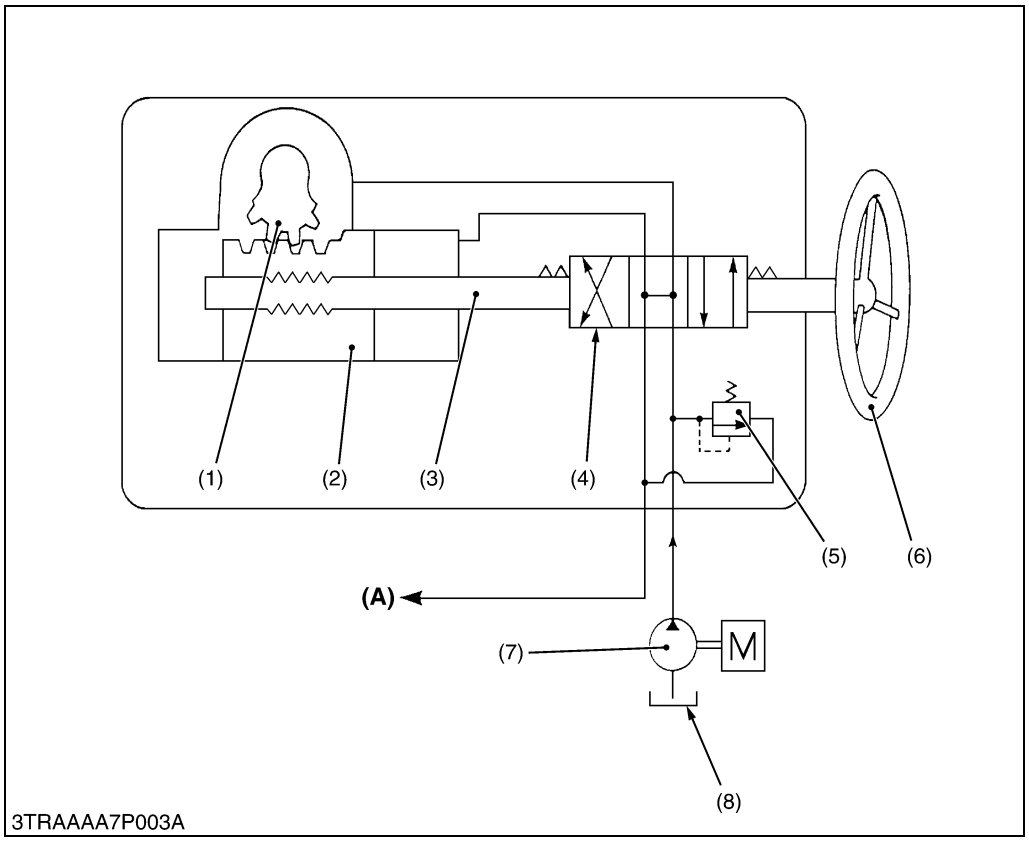

3TRAAAA7P003A

(1) Sector Gear Shaft
(2) Rack (Piston)
(3) Worm Shaft
(4) Control Valve
(5) Relief Valve
(6) Steering Wheel
(7) Pump
(8) Transmission Case
(9) Torsion Bar
(10) Stub Shaft (Spool)
(11) Sleeve

(A) Return to Suction Line and Front Transmission Case

W10128650

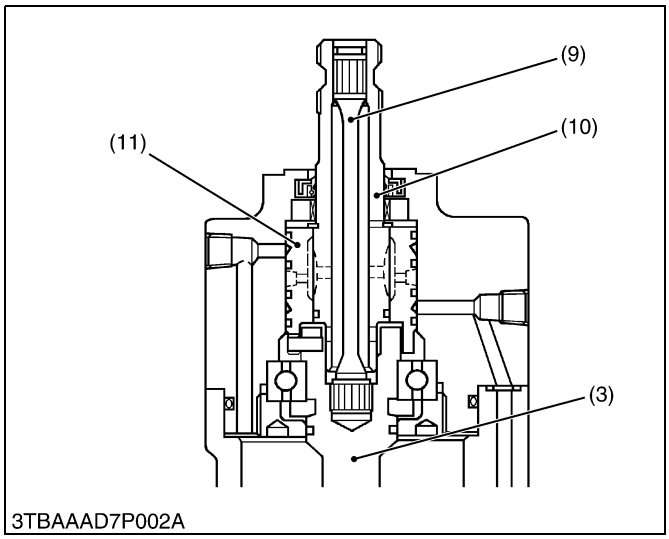

3TBAAAD7P002A

All models are equipped with integral type power steering that of rotary type control valve with torsion bar. (Note that this torsion bar doubles as a centering spring)

The mechanical gear section operates in the same way as ordinary manual steering system.

The input shaft (stub shaft) (10) and the worm shaft (3), which can separate from each other, are jointed together via a torsion bar (9). One end of the torsion bar is fixed by a pin with the stub shaft (10), where as the other end is press fitted to the end of the worm shaft (3).

The control valve (4) consists of a sleeve (11) and a spool (10). The sleeve is coupled by a pin to the worm shaft (3), and the spool is provided on the stub shaft (10).

When a turning torque in either direction is given to the stub shaft (10), the counterforce of the tires is produced from the sector gear shaft (1) through the drag link, pitman arm and other parts. The torsion bar (9) then gets under torsional force. In this way, the positional relation between the sleeve (11) and spool (10) changes, thereby switching the direction of the oil flowing into the right and left cylinders.

W10130730

3. POWER STEERING BODY

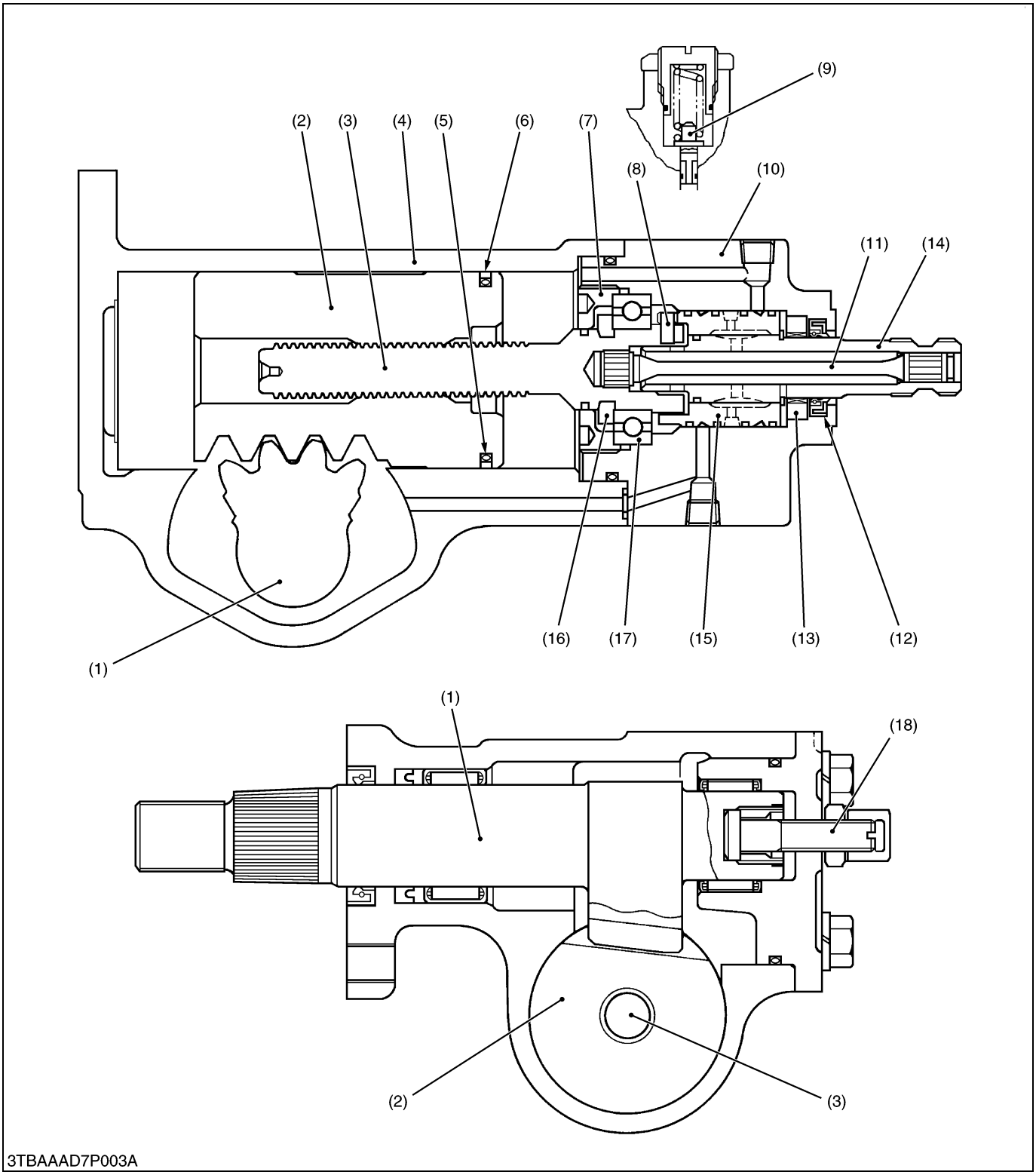

(1) Sector Gear Shaft
(2) Rack (Piston)
(3) Worm Shaft
(4) Gear Case
(5) O-ring
(6) Seal Ring
(7) Plug
(8) Pin
(9) Relief Valve
(10) Valve Housing
(11) Torsion Bar
(12) Oil Seal
(13) Bearing
(14) Stub Shaft
(15) Sleeve
(16) Staking Ring
(17) Ball Bearing
(18) Adjusting Screw for Play

4. OIL FLOW

■ Neutral Position

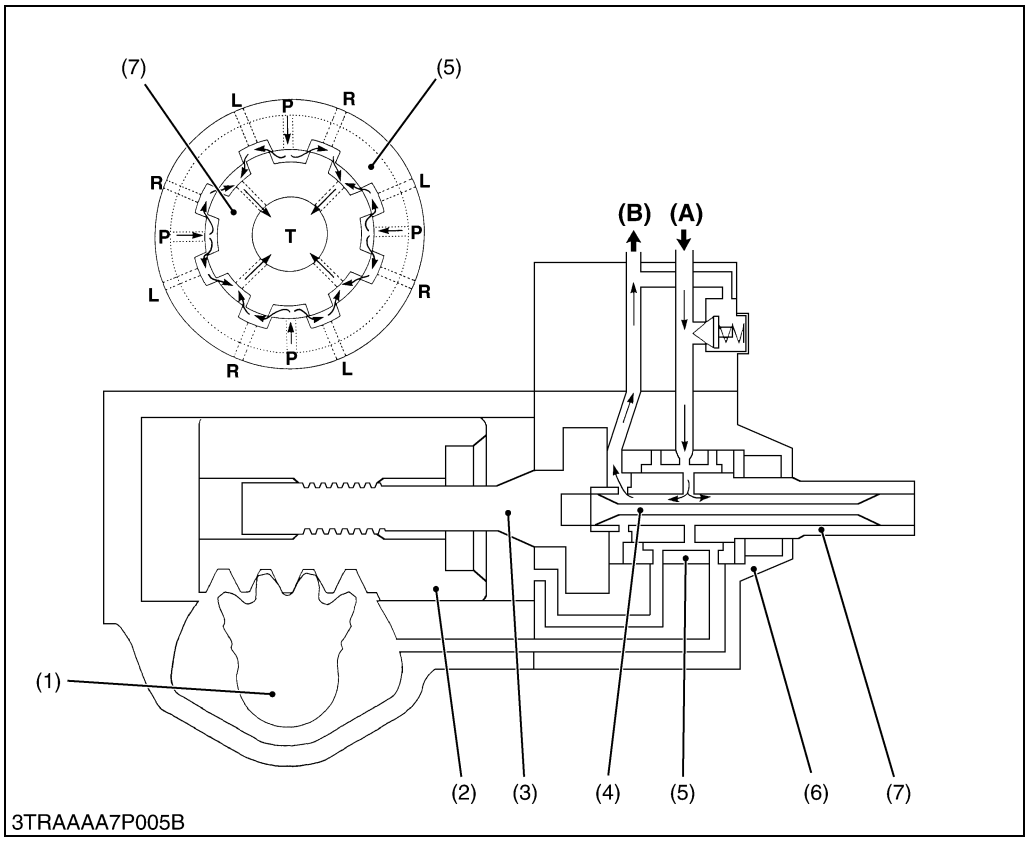

(1) Sector Gear Shaft
(2) Rack (Piston)
(3) Worm Shaft
(4) Torsion Bar
(5) Sleeve
(6) Valve Housing
(7) Stub Shaft

(A) From Pump
(B) Return to Suction Line

P : Pump Port
T : Return Port
L : Cylinder L Port
R : Cylinder R Port

W10134060

When the steering wheel is not turned, there is no relative displacement between stub shaft (7) and worm shaft (3). And spool part of the stub shaft (7) and sleeve (5) are placed in the neutral position.

Therefore, pressure-fed oil from pump flows to return line through the clearance between spool and sleeve. As a result pressure in the cylinder does not rise, so the front wheels keep the direction.

■ Left Turning

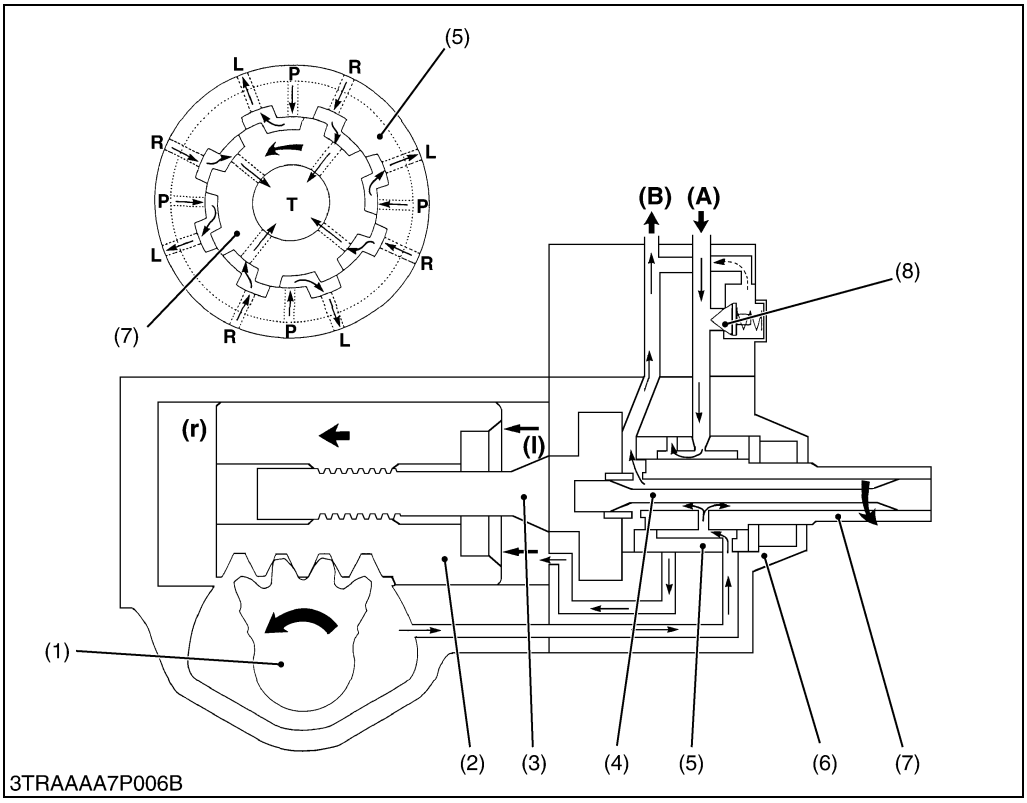

(1) Sector Gear Shaft
(2) Rack (Piston)
(3) Worm Shaft
(4) Torsion Bar
(5) Sleeve
(6) Valve Housing
(7) Stub Shaft (Spool)
(8) Relief Valve

(A) From Pump
(B) Return to Suction Line

(l) Chamber "l"
(r) Chamber "r"

P : Pump Port
T : Return Port
L : Cylinder L Port
R : Cylinder R Port

W10135480

1. When the steering wheel is turned counterclockwise, the stub shaft (7) starts turning, but the sector gear shaft (1), rack (piston) (2) and worm shaft (3) remain motionless under the load of the tires.
   This means that the torsion bar (4) gets under torsional force and that stub shaft (7) and the worm shaft (3) start turning in a relative displacement, the spool part of the stub shaft (7) turns counterclockwise with respect to the sleeve (5).
2. At this time, the oil passage from pump port **P** to cylinder port **R** and return port **T** are closed. At the same time, the oil passage from pump port **P** to cylinder port **L** is opened.
   Therefore, the pressure-fed oil from pump flows to the chamber **"l"** through cylinder port **L**. Thus, the rack (piston) (2) is pushed, and the sector gear shaft (1) is rotated in the direction of the arrow.
3. On the other hand, oil in the chamber **"r"** flows to return line through the cylinder port **R** and return port **T**.

■ Right Turning

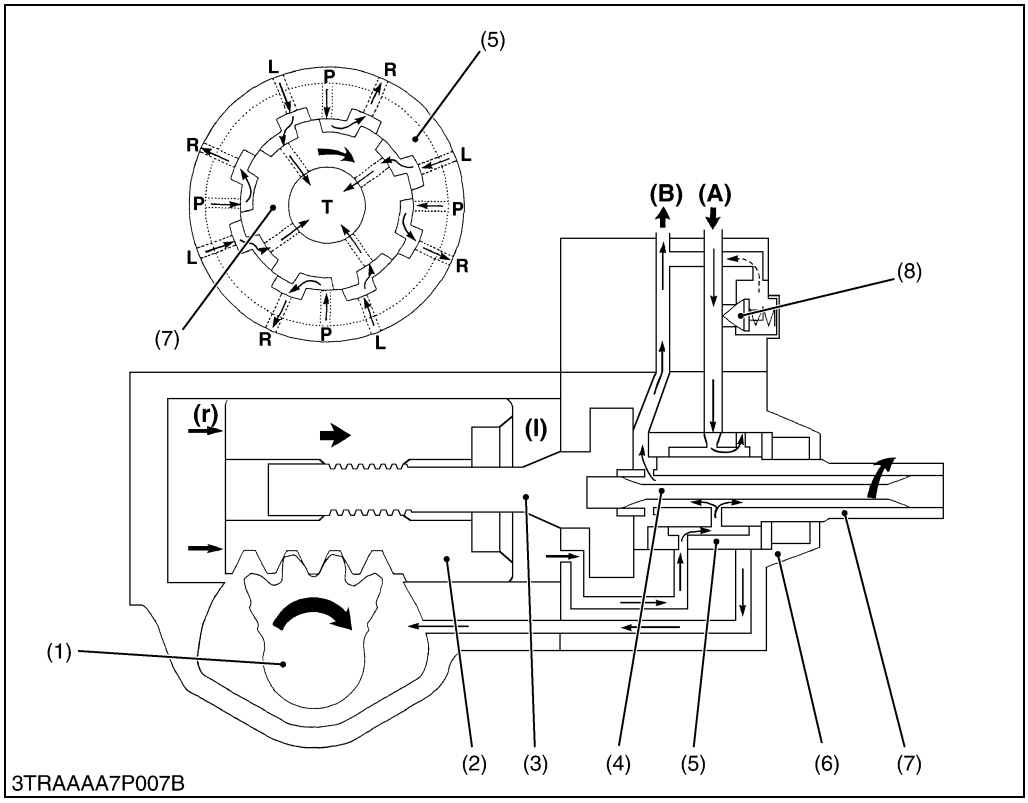

(1) Sector Gear Shaft
(2) Rack (Piston)
(3) Worm Shaft
(4) Torsion Bar
(5) Sleeve
(6) Valve Housing
(7) Stub Shaft (Spool)
(8) Relief Valve

(A) From Pump
(B) Return to Suction Line

(I) Chamber "I"
(r) Chamber "r"

P : Pump Port
T : Return Port
L : Cylinder L Port
R : Cylinder R Port

W10137950

Operation mechanism for left turning is the same as that for right turning, except for directions of oil flow from and to the cylinder ports.

■ Manual Operation

(When Engine Stops or Hydraulic Circuit Troubles)

Even when the engine stops or hydraulic circuit malfunctions thus leading to hydraulic operation stop, manual operation is possible. However, naturally, steering wheel requires a larger operating power.

If the steering wheel is turned when hydraulic circuit ceases to operate, the worm shaft (3) which is connected with stub shaft (7) moves slightly by steering force, then the worm shaft (3) and rack (piston) (2) have same relationship with the manual steering gear.

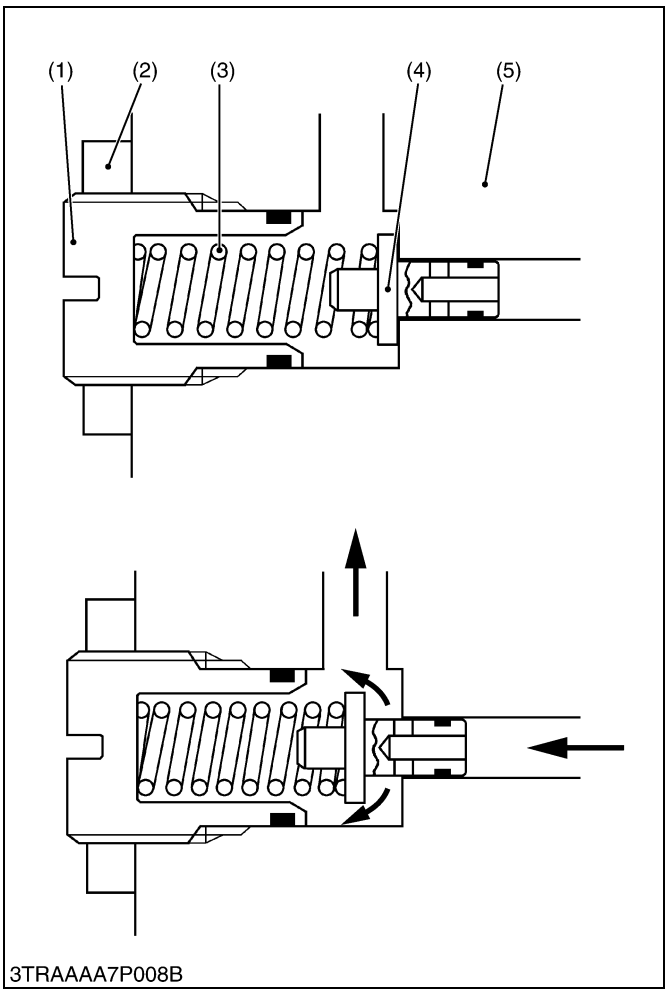

■ Operation of Relief Valve

This power steering is equipped with a direct-acting relief valve to restrict the maximum pressure in the hydraulic circuit and to prevent breakage of the hydraulic equipment.

When the pressure in the hydraulic circuit exceeds the relief valve setting pressure in such a case that the maximum steering angle of the front wheels is reached or road resistance to the front tires is too great, the spring (3) is compressed to generate a gap between the poppet (4) and the valve housing (5). The pressure-fed oil flows to tank port through the gap so that pressure rise is restricted.

The relief valve setting pressure can be adjusted by turning the adjusting screw (1).

(1) Adjusting Screw
(2) Lock Nut
(3) Spring
(4) Poppet
(5) Valve Housing

W10142250

SERVICING

CONTENTS

1. TROUBLESHOOTING 7-S1
2. SERVICING SPECIFICATIONS 7-S2
3. TIGHTENING TORQUES 7-S4
4. CHECKING, DISASSEMBLING AND SERVICING 7-S5
   [1] HYDRAULIC PUMP 7-S5
      (1) Checking and Adjusting 7-S5
      (2) Disassembling and Assembling 7-S6
      (3) Servicing 7-S7
   [2] POWER STEERING 7-S8
      (1) Checking 7-S8
      (2) Disassembling and Assembling 7-S9
      (3) Servicing 7-S12

1. TROUBLESHOOTING

Symptom	Probable Cause	Solution	Reference Page
Excessive Steering Wheel Play	• Backlash between sector gear shaft and rack (piston) too large • Steering linkage worn • Sector gear shaft worn	Adjust Replace Replace	7-S13 – 7-S11
Tractor Pulls to Right or Left	• Tire pressure uneven • Steering wheel play too small • Improper toe-in adjustment	Adjust Adjust Adjust	G-40 7-S13 G-23
Front Wheels Vibration	• Steering linkage worn • Improper toe-in adjustment	Replace Adjust	– G-23
Hard Steering	• Transmission fluid improper or insufficient • Oil leak from pipe joint • Hydraulic pump malfunctioning • Improper relief valve adjustment • Relief valve malfunctioning • Valve housing and sleeve malfunctioning • Seals in the steering gear box damaged • Backlash between sector gear shaft and rack (piston) too small • Air in the hydraulic pipes	Change Retighten Replace Adjust Replace Replace Replace Adjust Air vent	G-8 – 7-S6 7-S8, S12 7-S12 7-S12 – 7-S13 –
Low Operating Pressure	• Hydraulic pump malfunctioning • Improper relief valve adjustment • Relief valve malfunctioning • Seals in the steering gear box damaged • Rack (Piston) malfunctioning • Oil leak from pipe or pipe broken	Replace Adjust Replace Replace Replace rack (piston) assembly Replace	7-S6 7-S8, S12 7-S12 – 7-S12 –
Steering Wheel Does Not Return to Neutral Position	• Valve housing and sleeve jammed • Valve housing oil seal damaged	Repair or replace Replace	7-S12 –
Steering Force Fluctuates	• Insufficient oil • Insufficient bleeding • Control valve malfunctioning	Replenish Bleed Replace	G-8 – 7-S11
Noise	• Insufficient oil • Air sucked in pump from suction circuit • Pipe deformed	Replenish Repair Replace	G-8 – –

W10143220

2. SERVICING SPECIFICATIONS

Item		Factory Specification	Allowable Limit
[Hydraulic Pump] Pump Delivery at Engine 2600 rpm, Oil Temperature 50 °C, 122 °F	at no pressure [B1710, B2110, B2410]	9.8 L/min. 2.6 U.S.gal/min. 2.2 Imp.gal/min.	–
	[B2710]	11.7 L/min. 3.1 U.S.gal/min. 2.6 Imp.gal/min.	–
	at 12.3 MPa 125 kgf/cm^2 1778 psi [B1710, B2110, B2410]	8.3 L/min. 2.2 U.S.gal/min. 1.8 Imp.gal/min.	–
	[B2710]	10.0 L/min. 2.6 U.S.gal/min. 2.2 Imp.gal/min.	–
Gear to Casing	Clearance	–	0.15 mm 0.0059 in.
Gear Shaft to Bushing	Clearance	0.020 to 0.091 mm 0.00078 to 0.00358 in.	0.12 mm 0.0047 in.
Gear Shaft	O.D.	14.970 to 14.980 mm 0.58937 to 0.58976 in.	–
Bushing	I.D.	15.000 to 15.061 mm 0.59055 to 0.59295 in.	–
Side Plate	Thickness	2.48 to 2.50 mm 0.0976 to 0.0984 in.	2.40 mm 0.0945 in.

W10108870

Item		Factory Specification	Allowable Limit
Steering Wheel	Play	5.0 to 30.0 mm 0.2 to 1.2 in.	–
	Operation Force Condition : • Engine Speed : Approx. 2600 rpm	Less than 10 N 1.2 kgf 2.2 lbs	–
Relief Valve	Setting Pressure Condition : • Engine Speed: Approx. 2600 rpm • Oil Temperature : 45 to 55 °C 113 to 131 °F	11.3 to 12.3 MPa 115 to 125 kgf/cm^2 1636 to 1778 psi	–
Steering Gear Box to Rack (Piston)	Clearance	0.030 to 0.079 mm 0.00118 to 0.00310 in.	0.14 mm 0.0055 in.
Gear Box Bore	I.D.	61.000 to 61.030 mm 2.40157 to 2.40275 in.	–
Rack (Piston)	O.D.	60.951 to 60.970 mm 2.39964 to 2.40039 in.	–
Rack (Piston) Assembly	Axial Play	0 to 0.02 mm 0 to 0.0008 in.	0.04 mm 0.0016 in.
Valve Housing to Sleeve	Clearance	0.17 to 0.28 mm 0.0067 to 0.0110 in.	0.40 mm 0.0157 in.
Sleeve	O.D.	35.77 to 35.83 mm 1.4083 to 1.4106 in.	–
Valve Housing	I.D.	36.00 to 36.05 mm 1.4173 to 1.4193 in.	–
Sector Gear Shaft to Rack (Piston)	Backlash Deflection measured at pitman arm end	Less than 0.30 mm 0.0118 in.	–

W10138740

3. TIGHTENING TORQUES

Tightening torques of screws, bolts and nuts on the table below are especially specified.
(For general use screws, bolts and nuts : See page G-9.)

Item	N·m	kgf·m	ft-lbs
Power steering delivery pipe nut	65.0 to 75.0	6.6 to 7.7	47.9 to 55.3
Pump cover mounting screw	34.3 to 39.2	3.5 to 4.0	25.3 to 28.9
Steering wheel mounting nut	29.4 to 49.0	3.0 to 5.0	21.7 to 36.2
Drag link slotted nut	17.7 to 34.5	1.8 to 3.5	13.0 to 25.3
Power steering assembly mounting screw	77.5 to 90.1	7.9 to 9.2	57.2 to 66.5
Steering column mounting screw	17.7 to 20.6	1.8 to 2.1	13.1 to 15.1
Pitman arm mounting nut	117.7 to 147.1	12.0 to 15.0	86.8 to 108
Side cover mounting screw	19.6 to 29.4	2.0 to 3.0	14.5 to 21.7
Valve housing mounting hex head screw	39.2 to 49.0	4.0 to 5.0	28.9 to 36.2
Plug for worm shaft	8.8 to 10.8	0.9 to 1.1	6.5 to 8.0
Relief pressure adjusting screw lock nut	49.1 to 78.5	5.0 to 8.0	36.2 to 57.8

W10127360

4. CHECKING, DISASSEMBLING AND SERVICING

[1] HYDRAULIC PUMP

(1) Checking and Adjusting

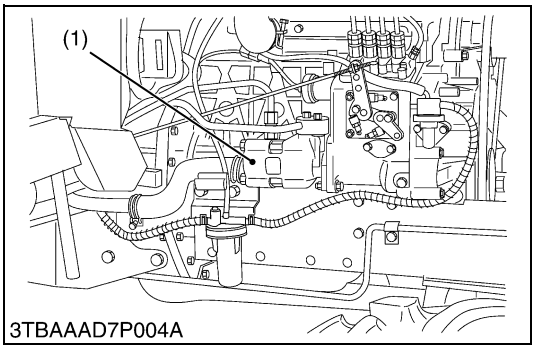

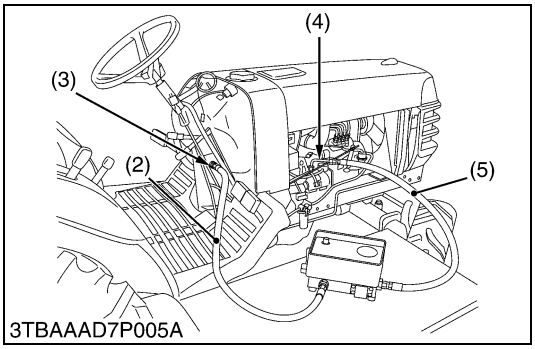

Flowmeter Connecting and Test Preparation

■ **IMPORTANT**

- **When using a flowmeter other than KUBOTA specified flowmeter (Code No.: 07916-52792), be sure to use the instructions with that flowmeter.**
- **In this hook-up, there is no relief valve. Therefore while testing, do not close the flowmeter loading valve completely.**

1. Remove the steering wheel, meter panel and panel under cover.
2. Remove the power steering delivery pipe and pipe joint of **IN** port of power steering body.
3. Set the adaptor **66** (4) to the hydraulic pump (1).
4. Install the adaptor **69** (3) to the **IN** port of power steering body.
5. Connect the hydraulic test hose (5) (Code No.: 07916-52651) to the adaptor **66** and flowmeter (Code No.: 07916-52791) inlet port.
6. Connect the another hydraulic test hose (2) to flowmeter outlet port and **IN** port of power steering body.
7. Open the flowmeter loading valve completely. (Turn counterclockwise)
8. Start the engine and set the engine speed at 2600 rpm.
9. Slowly close the loading valve to generate the pressure approx. 12.3 MPa (125 kgf/cm^2, 1778 psi).
10. Hold in this condition until oil temperature reaches approx. 50 °C (122 °F).

(Reference)

- Adaptor is included in the adaptor set (Code No.: 07916-54031).

(1) Hydraulic Pump
(2) Hydraulic Test Hose
(3) Adaptor 69
(4) Adaptor 66
(5) Hydraulic Test Hose

W10119600

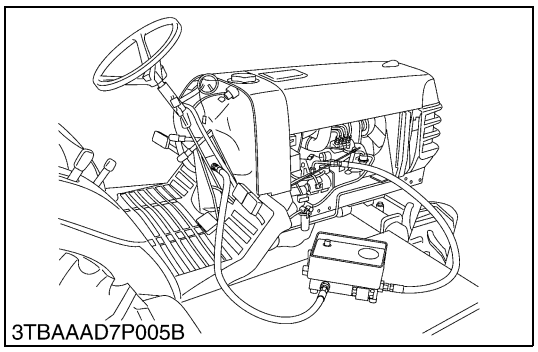

Pump Test

■ **NOTE**
- **Before pump testing, perform the flowmeter connecting and test preparation. (See page 7-S5.)**

1. Open the loading valve completely.
2. Start the engine and set at approx. 2600 rpm.
3. Read and note the pump delivery at no pressure.
4. Slowly close the loading valve to increase pressure approx. 12.3 MPa (125 kgf/cm^2, 1778 psi).
5. Read and note the pump flow at rated pressure.
6. Open the loading valve and stop the engine.

Condition
- Engine speed ..... Approx. 2600 rpm
- Rated pressure .... 12.3 MPa
  125 kgf/cm^2
  1778 psi
- Oil Temperature .... 50 °C
  122 °F

(Reference)

Hydraulic pump delivery at no pressure	Factory spec.	B1710 B2110 B2410	9.8 L/min. 2.6 U.S.gal/min. 2.2 Imp.gal/min.
		B2710	11.7 L/min. 3.1 U.S.gal/min. 2.6 Imp.gal/min.
Hydraulic pump delivery at rated pressure	Factory spec.	B1710 B2110 B2410	8.3 L/min. 2.2 U.S.gal/min. 1.8 Imp.gal/min.
		B2710	10.0 L/min. 2.6 U.S.gal/min. 2.2 Imp.gal/min.

W10122710

(2) Disassembling and Assembling

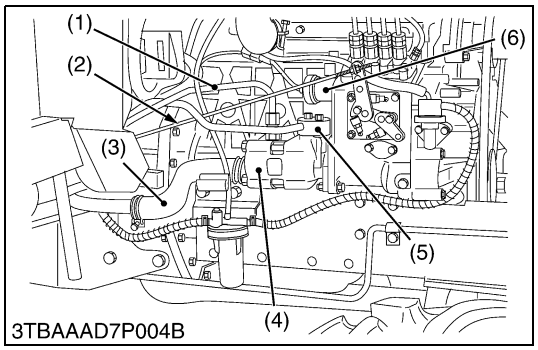

Removing Hydraulic Pump

1. Open the bonnet then remove the grille, side cover (RH) and disconnect the battery grounding cord.
2. Disconnect the connector of the engine stop solenoid (6) and accelerator rod (2).
3. Disconnect the power steering delivery pipe (1) and 3-point hitch delivery pipe (5).
4. Disconnect the suction hose (3) and remove the hydraulic pump (4).

(When reassembling)
- Apply liquid gasket (Three Bond 1208D or equivalent) to engine stop solenoid.

■ **NOTE**
- **For fastening hydraulic pipe nut, use two wrenches. Hold the fitting with a wrench, turn the pipe nut another wrench to avoid damage at fitting installed part.**

Tightening torque	Delivery pipe nut for power steering	65 to 75 N·m 6.6 to 7.7 kgf·m 47.9 to 55.3 ft-lbs

(1) Power Steering Delivery Pipe
(2) Accelerator Rod
(3) Suction Hose
(4) Hydraulic Pump
(5) 3-Point Hitch Delivery Pipe
(6) Engine Stop Solenoid

W10127010

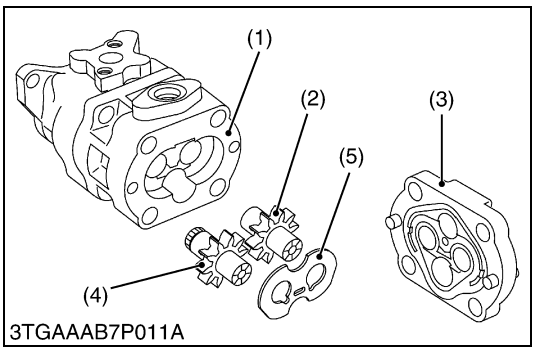

3TGAAAB7P011A

Cover, Side Plate and Gear

1. Secure the hydraulic pump with a vise, and remove the cover (3).
2. Remove the side plate (5).
3. Remove the drive gear (4) and driven gear (2) from the casing (1).

(When reassembling)

- Take care not to damage the O-ring.
- Align the holes of the cover and casing.
- Install the side plate, noting its location and direction.
- Install the gears, noting its direction.

Tightening torque	Cover mounting screw	34.3 to 39.2 N·m 3.5 to 4.0 kgf·m 25.3 to 28.9 ft-lbs

(1) Casing
(2) Driven Gear
(3) Cover
(4) Drive Gear
(5) Side Plate

W10129140

(3) Servicing

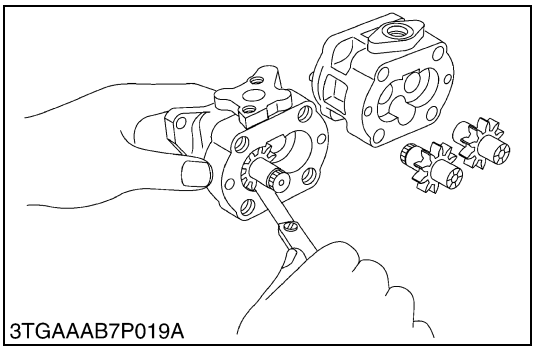
3TGAAAB7P019A

Clearance between Tip of Gear Tooth and Casing

1. Measure the clearance between gears and casing at several points with feeler gauge.
2. If the clearance exceeds the allowable limit, replace the assembly.

Clearance between tip of gear tooth and casing	Allowable limit	0.15 mm 0.0059 in.

W10132590

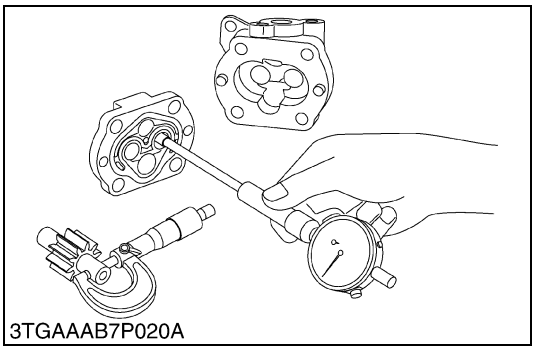
3TGAAAB7P020A

Clearance between Bushing and Shaft

1. Measure the shaft O.D. with an outside micrometer.
2. Measure the bushing I.D. with a cylinder gauge.
3. If the clearance exceeds the allowable limit, replace it.

Clearance between bushing and shaft	Factory spec.	0.020 to 0.091 mm 0.00078 to 0.00358 in.
	Allowable limit	0.12 mm 0.0047 in.

Shaft O.D.	Factory spec.	14.970 to 14.980 mm 0.58937 to 0.58976 in.
Bushing I.D.	Factory spec.	15.000 to 15.061 mm 0.59055 to 0.59295 in.

W10133600

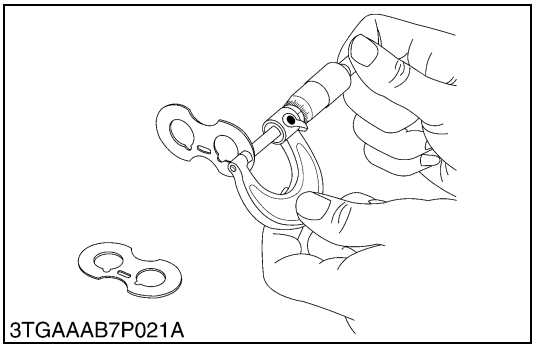
3TGAAAB7P021A

Side Plate Thickness

1. Measure the side plate thickness with an outside micrometer.
2. If the thickness is less than the allowable limit, replace it.

Side plate thickness	Factory spec.	2.48 to 2.50 mm 0.0976 to 0.0984 in.
	Allowable limit	2.40 mm 0.0945 in.

W10134960

[2] POWER STEERING

(1) Checking

■ **IMPORTANT**
- **Use only the transmission fluid (See page G-8), in no case use mixture of oils of different brands.**
- **Do not disassemble the hydraulic pump and steering controller needlessly.**
- **After installing or reassembling the power steering hydraulic components, be sure to bleed air.**

(Bleeding)
- Start the engine, then turn the steering wheel slowly in both directions all the way alternately several times, and stop the engine.

Steering Wheel Play

1. Refer to the backlash between sector gear shaft and rack (piston) on page 7-S13.

Power steering wheel play	Reference value	5.0 to 30.0 mm 0.2 to 1.2 in.

W10136800

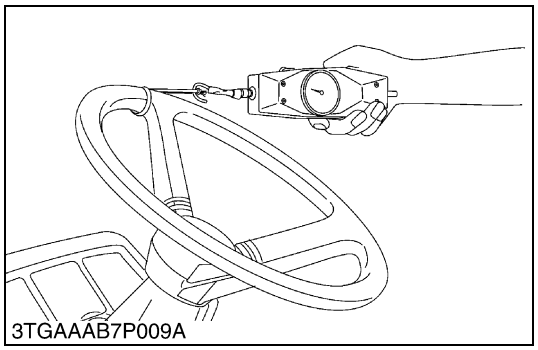
3TGAAAB7P009A

Steering Wheel Operating Force

1. Park the tractor on flat concrete place.
2. Start the engine. After warming up, set the engine speed at approx. 2600 rpm.
3. Set a spring balance to the steering wheel to measure the operating force.
4. If the measurement exceeds the factory specification, check the suction line, delivery line, and the performance of hydraulic pump.
   And then, check the power steering assembly.

Condition
- Engine speed ..... Approx. 2600 rpm
- Oil temperature ..... 45 to 55 °C
  113 to 131 °F
- Tractor by itself (without any implement and weight)

Steering wheel operating force	Factory spec.	Less than 10 N 1.2 kgf 2.2 lbs

W10137530

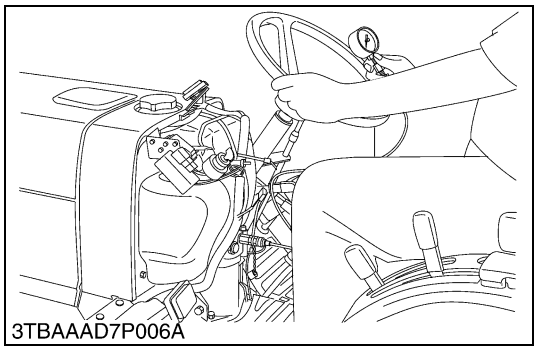
3TBAAAD7P006A

Relief Valve Setting Pressure

1. Open the bonnet and disconnect the battery grounding cord.
2. Remove the meter panel and panel under cover.
3. Remove the plug of power steering body and then set the relief valve pressure tester (use adaptor **D**).
4. Start the engine. After warming up, set the engine speed at approx. 2600 rpm.
5. Fully turn the steering wheel to the left end to read the relief pressure. After reading, stop the engine.
6. If the pressure is not factory specification, check the pump delivery line and adjust the relief valve setting pressure. (Refer to 7-S12.)

Condition
- Engine speed ..... Approx. 2600 rpm
- Oil temperature ..... 45 to 55 °C
  113 to 131 °F

Power steering relief valve setting pressure	Factory spec.	11.3 to 12.3 MPa 115 to 125 kgf/cm^2 1636 to 1778 psi

W10139190

(2) Disassembling and Assembling

(A) Separating Power Steering Assembly

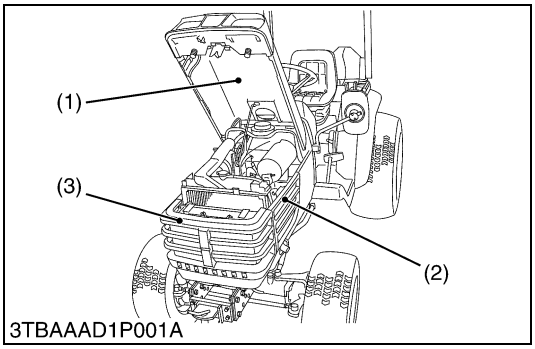

Hood, Side Cover and Front Grille

1. Open the hood (1) and remove the front grille (3).
2. Disconnect the head light connectors and remove the hood and side covers (2).

(1) Hood
(2) Side Cover
(3) Front Grille

W10156940

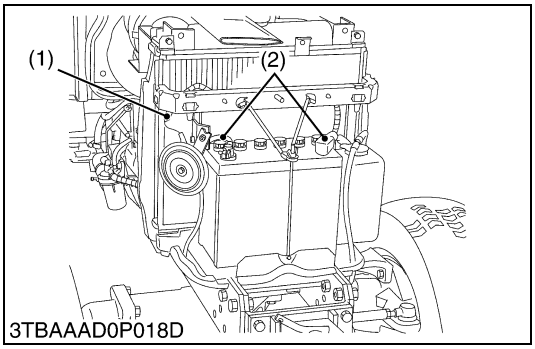

Battery and Horn

1. Disconnect the battery cords (2) and horn connector (1).

■ **NOTE**

- **When disconnecting the battery cords, disconnect the grounding cord first. When connecting, positive cord first.**

(1) Horn Connector
(2) Battery Cord

W10424310

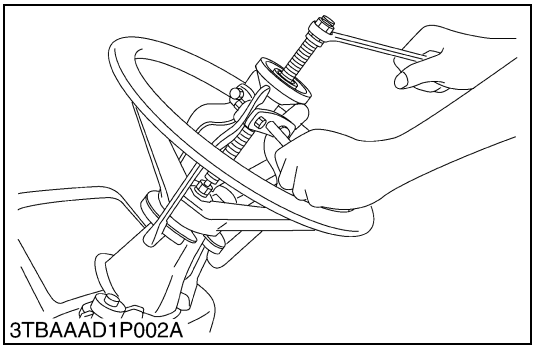

Steering Wheel

1. Remove the steering wheel cap.
2. Remove the steering wheel mounting nut and remove the steering wheel with a steering wheel puller (Code No. 07916-51090).

(When reassembling)

Tightening torque	Steering wheel mounting nut	29.4 to 49.0 N·m 3.0 to 5.0 kgf·m 21.7 to 36.2 ft-lbs

W10158450

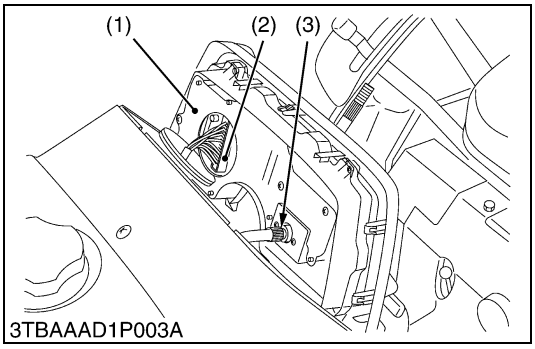

Meter Panel and Panel Under Cover

1. Open the meter panel (1) and disconnect the meter panel connector (2) and hour-meter cable (3). Then remove the meter panel.
2. Disconnect the combination switch connector (8), main switch connector (4), hazard switch connector (6) and position light switch connector (7).
3. Tap out the spring pin and remove the hand accelerator lever (5).
4. Remove the panel under cover (9).

(1) Meter Panel
(2) Meter Panel Connector
(3) Hour-meter Cable
(4) Main Switch Connector
(5) Hand Accelerator Lever
(6) Hazard Switch Connector
(7) Position Light Switch Connector
(8) Combination Switch Connector
(9) Panel Under Cover

W10177730

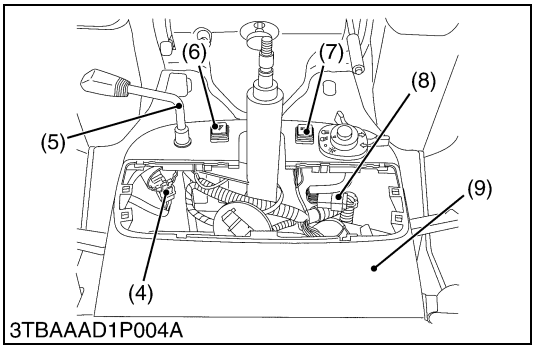

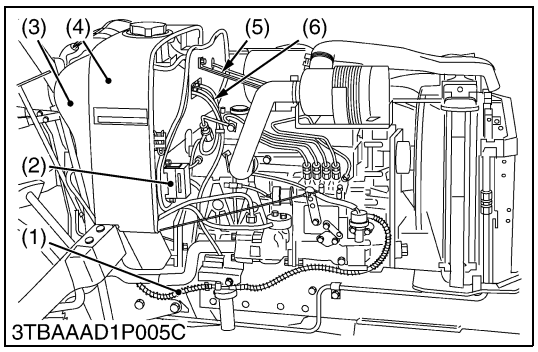

Fuel Tank

1. Disconnect the fuel hose (1) at the fuel filter side, then drain fuel completely.
2. Remove the fuel tank frame stay (5).
3. Disconnect the flasher unit and starter relay connector, and remove the lead wire for fuel gauge.
4. Remove the fuse box (2).
5. Disconnect the overflow hoses (6) of fuel line.
6. Remove the tank frame (4) with fuel tank (3).

(1) Fuel Hose
(2) Fuse Box
(3) Fuel Tank
(4) Fuel Tank Frame
(5) Fuel Tank Frame Stay
(6) Overflow Hose

W10145730

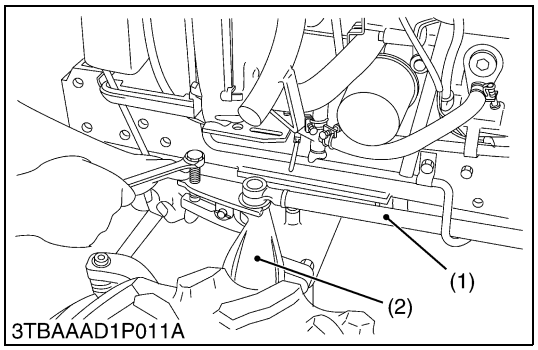

Drag Link

1. Remove the cotter pin and loosen the slotted nut.
2. Disconnect the drag link (1) with a pitman arm puller from the knuckle arm (2).

(When reassembling)

■ **IMPORTANT**
- **Do not loosen the slotted nut to align the hole.**
- **Install the cotter pin as shown in the figure.**

(Reference)

Tightening torque	Slotted nut	17.7 to 34.5 N·m 1.8 to 3.5 kgf·m 13.0 to 25.3 ft-lbs

(1) Drag Link
(2) Knuckle Arm

W10147720

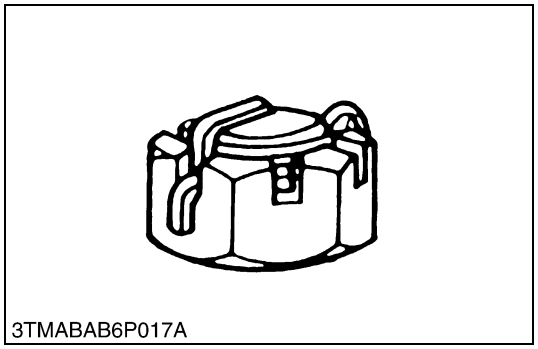

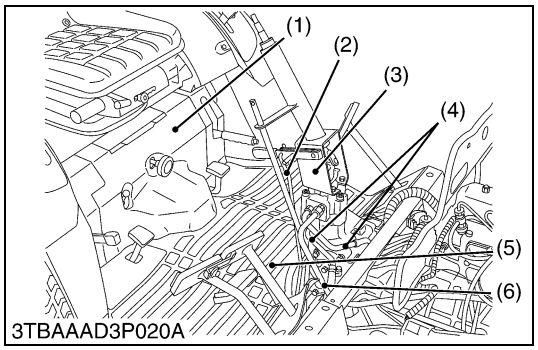

Power Steering Assembly

1. Remove the seat under cover (1) and rubber mat (5).
2. Remove the clutch spring (except B2710) and remove the left hand side step.
3. Remove the power steering delivery pipe (6) and return pipe (4).
4. Disconnect the speed set rod (2). (HST Model)
5. Remove the power steering assembly (3) from the center frame.

(When reassembling)

■ **NOTE**
- **For fastening hydraulic pipe nut, use two wrenches. Hold the fitting with a wrench, turn the pipe nut with another wrench to avoid damage at fitting installed part.**

Tightening torque	Delivery pipe nut for power steering	64.7 to 75.5 N·m 6.6 to 7.7 kgf·m 47.9 to 55.3 ft-lbs
	Power steering assembly mounting screw	77.5 to 90.1 N·m 7.9 to 9.2 kgf·m 57.2 to 66.5 ft-lbs

(1) Seat Under Cover
(2) Speed Set Rod
(3) Power Steering Assembly
(4) Power Steering Return Pipe
(5) Rubber Mat
(6) Power Steering Delivery Pipe

W10180430

(B) Disassembling Power Steering Body

■ **NOTE**
- **Carefully clean up the disassembled parts and sub-assemblies with fresh oil. Blow them dry with compressed air.**
- **Replace all the disassembled sealing parts (O-ring, U-seal, oil seal, slipper seal, etc.) with new ones.**
- **Check all the cleaned-up part for scratches, excessive wear, cracks and other defects. Place them in order on a clean workbench. Be also careful to keep off dust and dirt.**

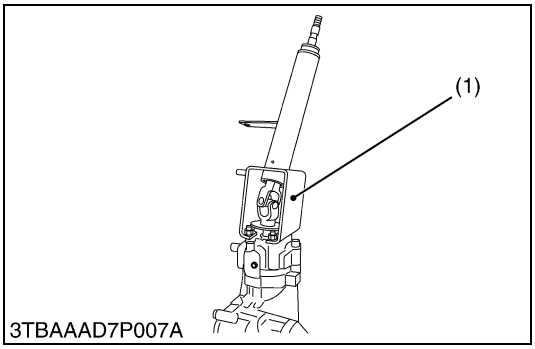

Steering Column

1. Turn the steering shaft several times to drain oil.
2. Loosen the steering column mounting screws, and remove the steering column with steering shaft and universal joint.

(When reassembling)
- Apply liquid lock (Three Bond 1324B or equivalent) to the steering column mounting screw.

Tightening torque	Steering column mounting screw	17.7 to 20.6 N·m 1.8 to 2.1 kgf·m 13.1 to 15.1 ft-lbs

(1) Steering Column

W10152540

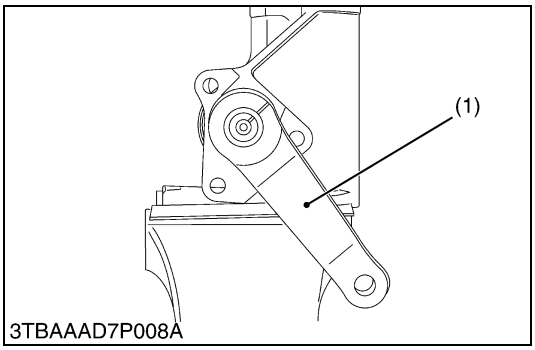

Pitman Arm

1. Remove the pitman arm mounting nut and remove the pitman arm with pitman arm puller (Code No.: 07909-39011).

(When reassembling)

■ **IMPORTANT**
- **Install the pitman arm to the sector gear shaft so that their marks align.**

Tightening torque	Pitman arm mounting nut	117.7 to 147.1 N·m 12.0 to 15.0 kgf·m 86.8 to 108 ft-lbs

(1) Pitman Arm

W10153790

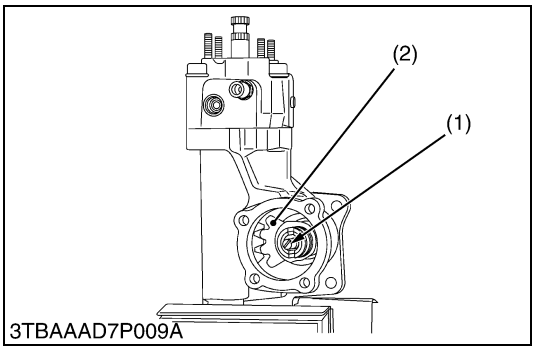

Side Cover and Sector Gear Shaft

1. Loosen the lock nut.
2. Remove the side cover mounting screws.
3. Screw in the adjusting screw (1) to remove the side cover.
4. Tap out the sector gear shaft (2) toward the side cover.

(When reassembling)
- Turn the worm shaft so that the rack (piston) is centered in its travel. Then, install the sector gear shaft so that the center of its teeth engages the center teeth of the rack (piston).
- Be sure to adjust the backlash between sector gear shaft and rack (piston). (See page 7-S13.)

Tightening torque	Side cover mounting screw	19.6 to 29.4 N·m 2.0 to 3.0 kgf·m 14.5 to 21.7 ft-lbs

(1) Adjusting Screw (2) Sector Gear Shaft

W10155290

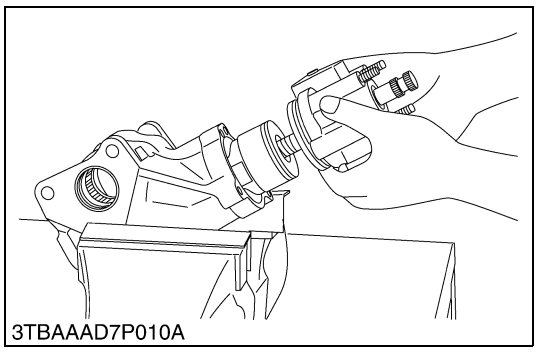
3TBAAAD7P010A

Valve Assembly and Rack (Piston)

1. Remove the valve housing mounting hex. head screws.
2. Draw out the valve assembly and rack (piston) as a unit.

(When reassembling)

Tightening torque	Valve housing mounting hex. head screw	39.2 to 49.0 N·m 4.0 to 5.0 kgf·m 28.9 to 36.2 ft-lbs

W10157020

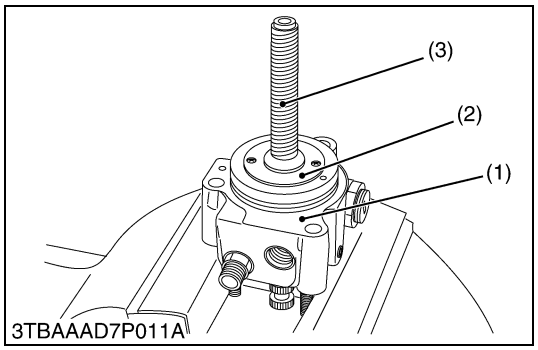

3TBAAAD7P011A

Valve Assembly

1. Remove the plug (2).
2. Pull out the worm shaft (3) with sleeve and stub shaft from valve housing (1).

(When reassembling)

- When tighten the plug, use the PS plug wrench (refer to G-39).
- Be sure to tighten the plug to specified torque and staking the plug (2).
  If the plug is tightened to excessive torque, it may cause damage to the thrust races and thrust bearings.

Tightening torque	Plug	8.8 to 10.8 N·m 0.9 to 1.1 kgf·m 6.5 to 8.0 ft-lbs

(1) Valve Housing
(2) Plug
(3) Worm Shaft

W10158710

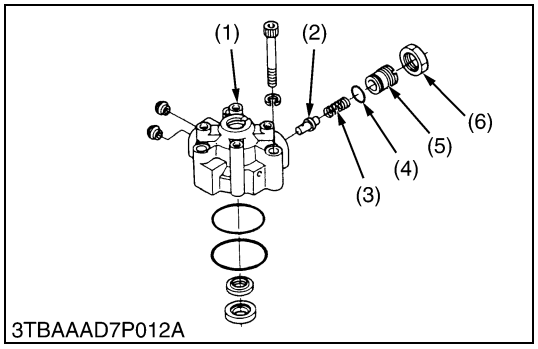

3TBAAAD7P012A

Disassembling Valve Housing

■ **IMPORTANT**

- **Do not disassemble the relief valve needlessly, since it has been factory-adjusted.**
- **If the relief valve is disassembled, replace the adjusting screw with new one, and after reassembly, be sure to adjust the setting pressure, then stake the adjusting screw with a punch.**

Tightening torque	Relief pressure adjusting screw lock nut	49.1 to 78.5 N·m 5.0 to 8.0 kgf·m 36.2 to 57.8 ft-lbs

(1) Valve Housing
(2) Relief Valve Poppet
(3) Relief Spring
(4) O-ring
(5) Adjusting Screw
(6) Lock Nut

W10160270

(3) Servicing

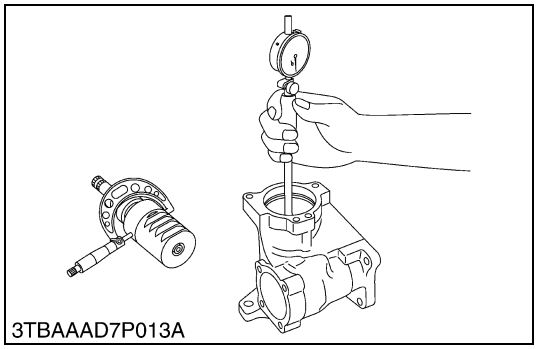
3TBAAAD7P013A

Clearance between Steering Gear Box and Rack (Piston)

1. Measure the steering gear box cylinder I.D. with a cylinder gauge.
2. Measure the rack (piston) O.D. with an outside micrometer, and calculate this clearance.
3. If the clearance exceeds the allowable limit, replace the steering gear box or rack (piston) assembly.

Clearance between steering gear box and rack (piston)	Factory spec.	0.030 to 0.079 mm 0.00118 to 0.00310 in.
	Allowable limit	0.14 mm 0.0055 in.

W10161780

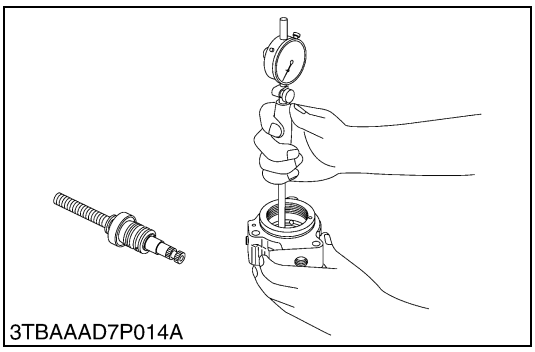
3TBAAAD7P014A

Clearance between Valve Housing and Sleeve

1. Measure the valve housing I.D. with a cylinder gauge and the sleeve O.D. with an outside micrometer, and calculate this clearance.
2. If the clearance exceeds the allowable limit, replace the valve housing or sleeve assembly.

■ **IMPORTANT**

- **Check to see if the slipper seals of sleeve do not have excessive wear.**

Clearance between valve housing and sleeve	Factory spec.	0.17 to 0.28 mm 0.0067 to 0.0110 in.
	Allowable limit	0.40 mm 0.0157 in.

W10163370

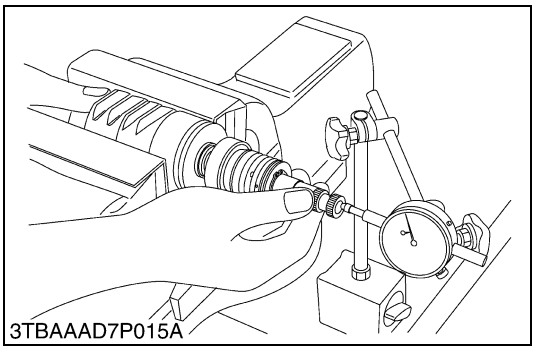
3TBAAAD7P015A

Axial Play of Rack (Piston) Assembly

1. Secure the rack (piston) assembly in a vise.
2. Set a dial indicator with its finger on the worm shaft of the rack (piston) assembly.
3. Move the worm shaft axially and measure the play.
4. If the play exceeds the allowable limit, replace the rack (piston) assembly.

Axial play of rack (piston) assembly	Factory spec.	0 to 0.02 mm 0 to 0.0008 in.
	Allowable limit	0.04 mm 0.0016 in.

W10165340

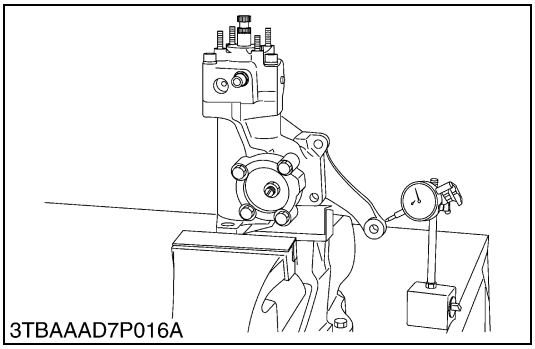
3TBAAAD7P016A

Backlash between Sector Gear Shaft and Rack (Piston)

1. Attach the pitman arm having no play.
2. Set a dial indicator with its finger on the pitman arm.
3. Move the pitman arm lightly, and measure the deflection.
4. If the measurement is not within the factory specification, adjust the backlash with the adjusting screw.

Backlash between sector gear shaft and rack (piston)	Factory spec.	Less than 0.30 mm 0.0118 in.

W10166630

8 HYDRAULIC SYSTEM

MECHANISM

CONTENTS

1. HYDRAULIC CIRCUIT 8-M1
   [1] MANUAL TRANSMISSION 8-M1
   [2] HYDROSTATIC TRANSMISSION 8-M2
2. HYDRAULIC PUMP 8-M3
3. RELIEF VALVE 8-M4
4. POSITION CONTROL VALVE 8-M5
5. FEEDBACK LINKAGE FOR POSITION CONTROL 8-M7
6. HYDRAULIC CYLINDER 8-M8
7. REMOTE CONTROL VALVE 8-M9
8. HYDRAULIC BLOCK TYPE OUTLET 8-M10
9. REAR HYDRAULIC OUTLET 8-M11

1. HYDRAULIC CIRCUIT

[1] MANUAL TRANSMISSION

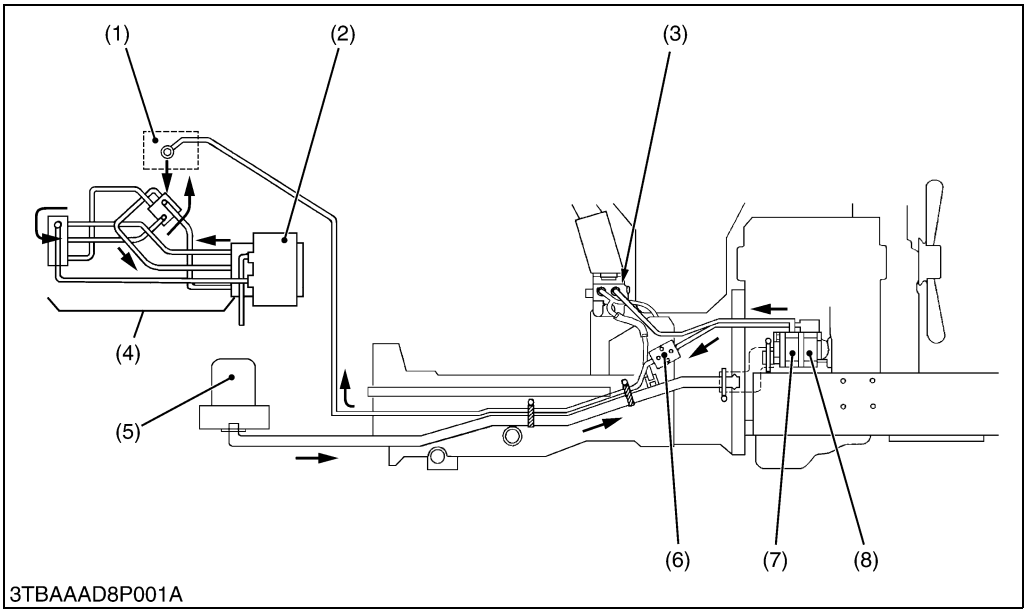

(1) Position Control Valve
(2) Remote Control Valve
(3) Power Steering Controller
(4) Rear Hydraulic Outlet
(5) Oil Filter
(6) Hydraulic Block Type Outlet
(7) Hydraulic Pump (for Power Steering)
(8) Hydraulic Pump (for 3-Point Hitch)
(9) Hydraulic Cylinder
(10) Lowering Speed Adjusting Valve
(11) Relief Valve

A : To Mower Lift Cylinder

W10126650

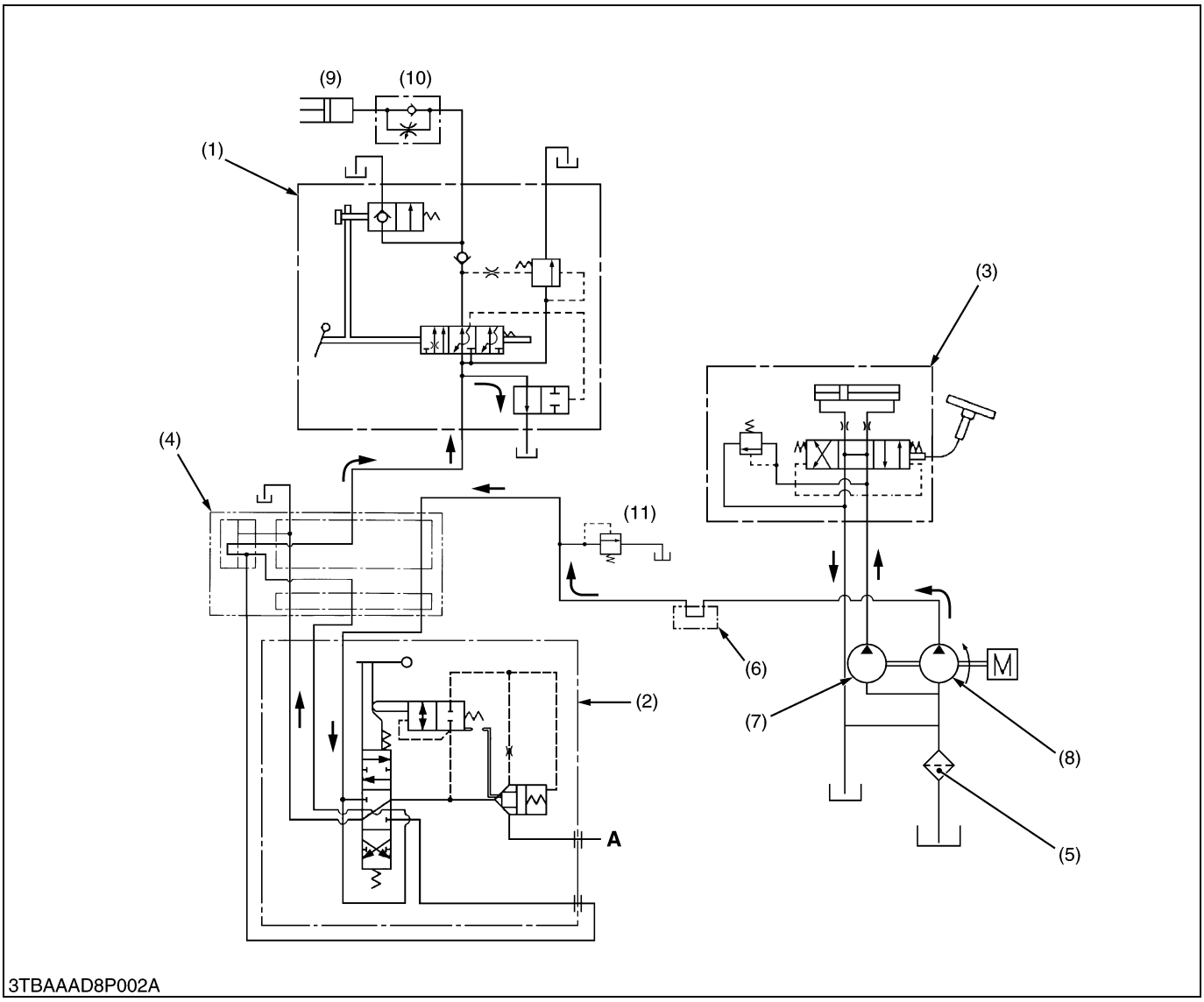

[2] HYDROSTATIC TRANSMISSION

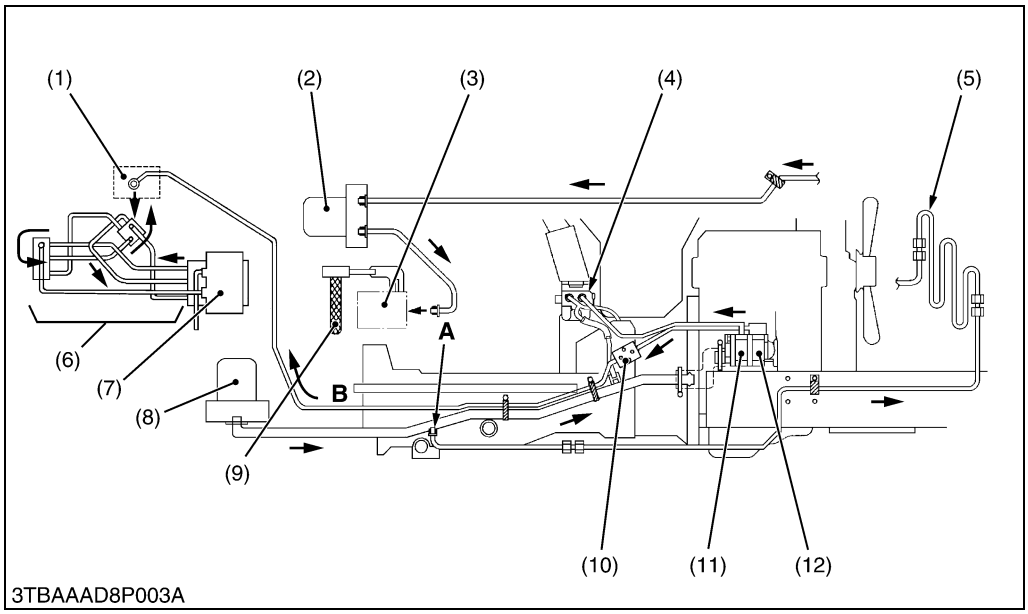

(1) Position Control Valve
(2) Oil Filter (for HST)
(3) Hydrostatic Transmission (HST)
(4) Power Steering Controller
(5) Oil Cooler
(6) Rear Hydraulic Outlet
(7) Remote Control Valve
(8) Oil Filter
(9) Oil Strainer
(10) Hydraulic Block Type Outlet
(11) Hydraulic Pump (for Power Steering)
(12) Hydraulic Pump (for 3-Point Hitch)
(13) Hydraulic Cylinder
(14) Lowering Speed Adjusting Valve
(15) Relief Valve

A : From HST
B : To Transmission Case
C : To Mower Lift Cylinder

W10128290

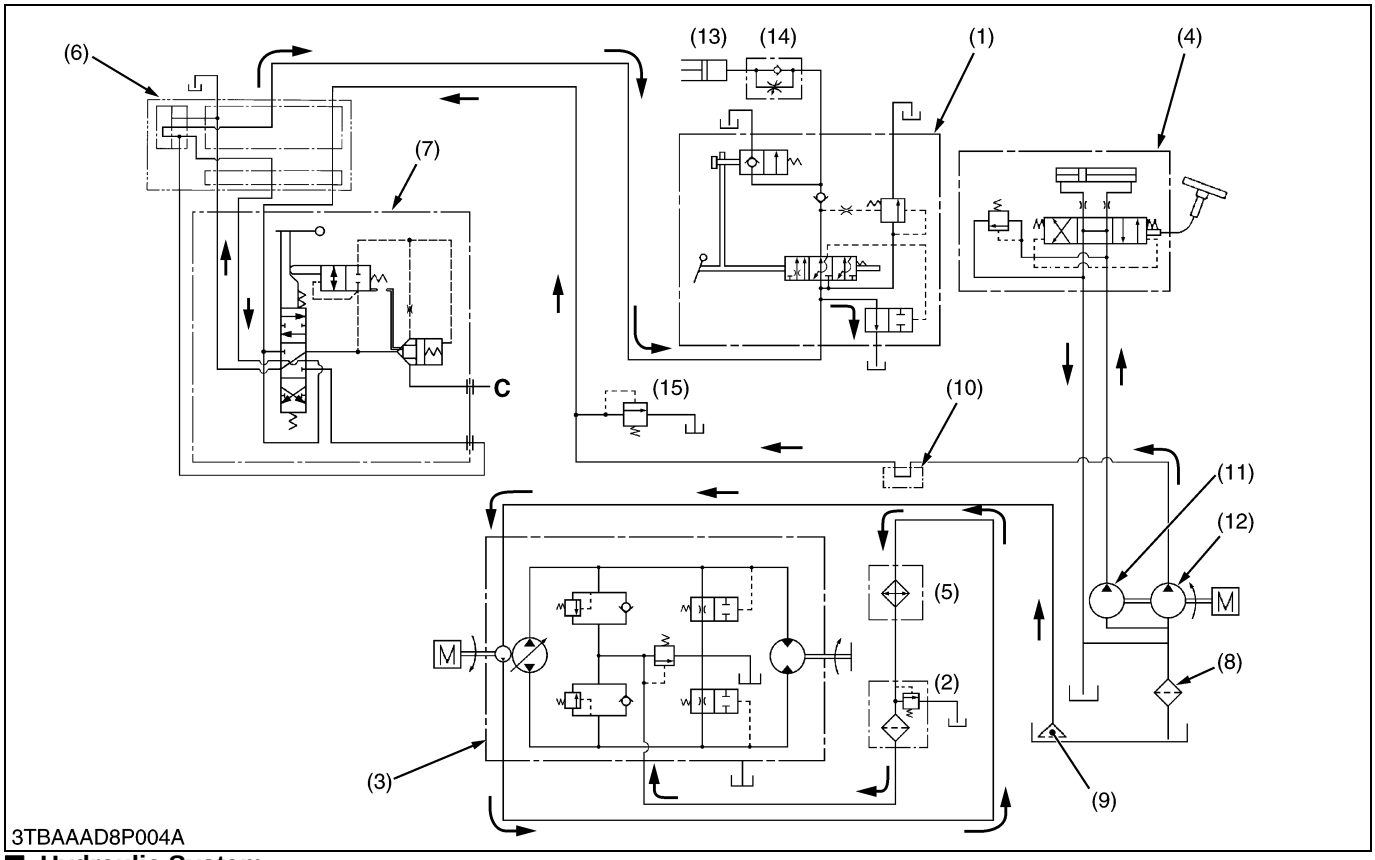

■ Hydraulic System

The hydraulic system of these tractors are composed of a hydraulic pump, hydraulic block type outlet, control valve, hydraulic cylinder, hydraulic oil filter and other components.

This system has the following functions.

1. Hydraulic power take off from the hydraulic block type outlet to operate the implements such as a front loader, front blade and so on.

- Oil is supplied by a hydraulic pump connected to the engine. When an engine is started, a hydraulic pump starts running, sucks oil from a transmission case. The hydraulic pump forces out the oil to hydraulic block type outlet, control valve, hydraulic cylinder and so on.

2. HYDRAULIC PUMP

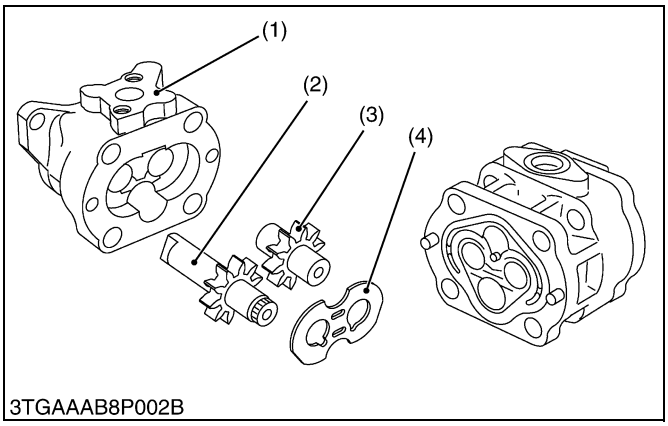

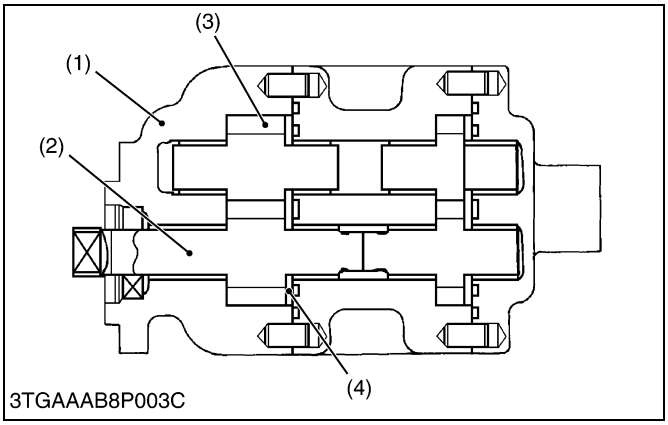

The hydraulic pump is composed of the casing (1), side plate (4), and two spur gears (drive gear (2) and driven gear (3)) that are in mesh.

Hydraulic pump is driven by the fuel camshaft.

Maximum displacement is as follows.

	Displacement	Engine speed	Condition
B1710 B2110 B2410	16.6 L/min. 4.4 U.S.gal/min. 3.7 Imp.gal/min.	At 2600 rpm	at no load
B2710	24.4 L/min. 6.4 U.S.gal/min. 5.4 Imp.gal/min.		

(1) Casing
(2) Drive Gear
(3) Driven Gear
(4) Side Plate

W10131850

3. RELIEF VALVE

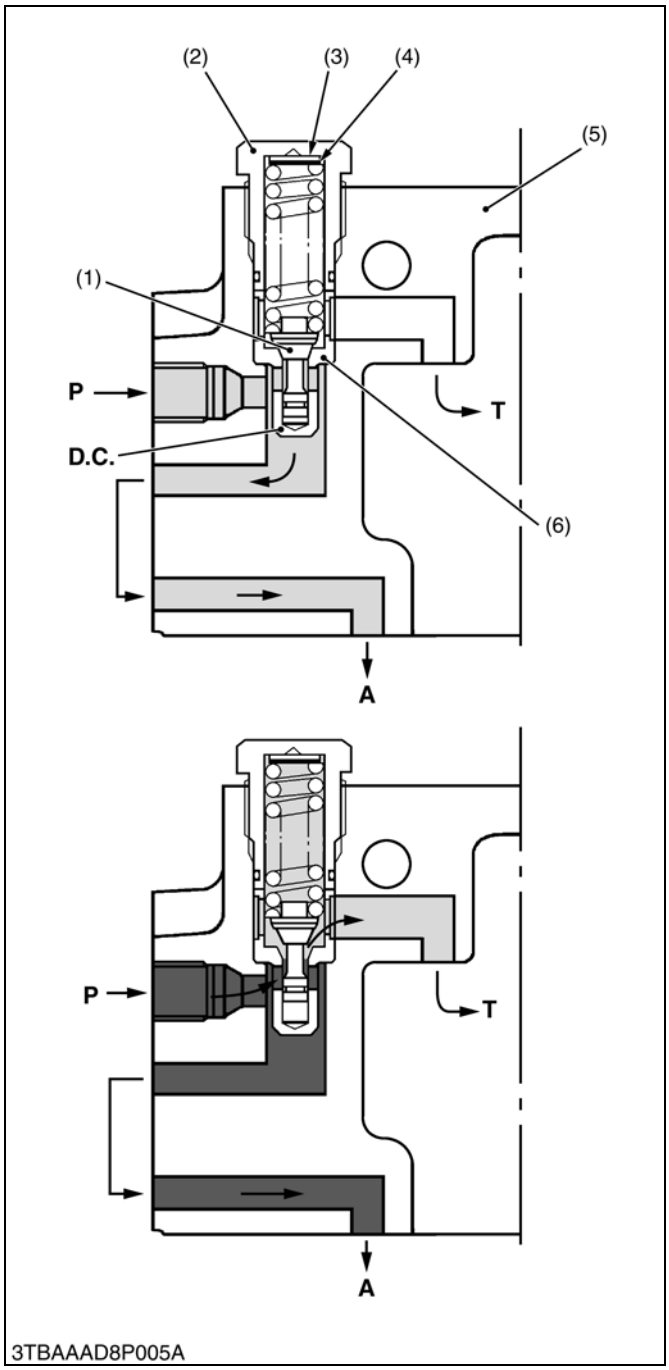

The implement control system circuit has a relief valve to restrict the maximum pressure in the circuit. The relief valve is located top of the hydraulic cylinder body.

The relief valve is of the guide piston type with damping effect.

Among direct acting relief valves, this type is suited to higher pressure and has large capacity. Furthermore, this type is free from unstable operation, such as chattering, which occurs often in direct acting relief valves.

As shown in the figure, the guide is attached to the poppet (1) and a valve chamber **D.C.** (called the damping chamber) is formed at the bottom of the guide piston. The inlet of the valve leads to the chamber via a clearance between the sliding portion of the guide and the seat (6), minimizing valve vibration with the damping effect of the chamber.

When the oil pressure in the circuit is lower than the setting pressure of the relief valve, the relief valve is not operated and the oil fed to the relief valve from the hydraulic pump flows into the implement control valve.

As the oil pressure in the circuit increases, so does the pressure in the damping chamber **D.C.**. When the pressure rises above the valve setting and overcomes the spring force, the valve opens. Oil then flows out to the transmission case through **T** port, preventing any further rise in pressure. The valve closes again when enough oil is released to drop pressure below the valve setting.

(Reference)

- Relief valve setting pressure :
  B1710, B2110, B2410 ... 13.2 to 13.7 MPa
  135 to 140 kgf/cm^2
  1920 to 1991 psi
  B2710 ..... 14.7 to 15.2 MPa
  150 to 155 kgf/cm^2
  2132 to 2204 psi
- Engine speed : Maximum
- Oil temperature : 40 to 50 °C
  104 to 122 °F

(1) Poppet
(2) Plug
(3) Washer
(4) Shim
(5) Hydraulic Cylinder Body
(6) Seat

D.C.:Damping Chamber
P : Pump Port
T : Tank Port
A : To Position Control Valve

W10134000

4. POSITION CONTROL VALVE

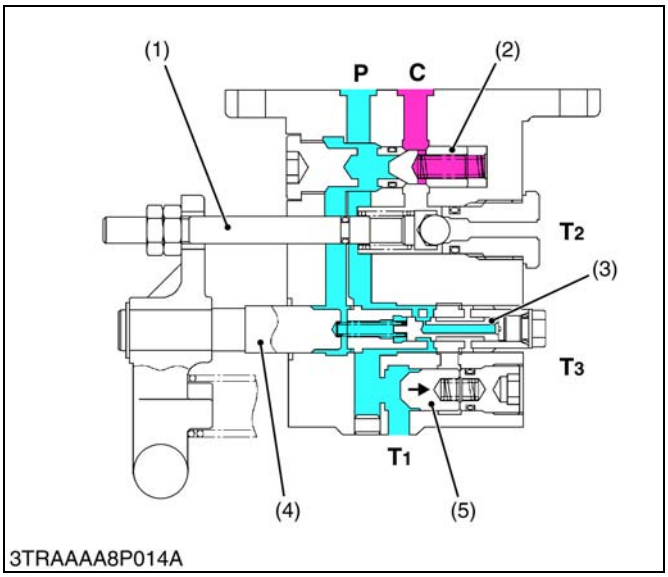

■ Neutral

Oil forced into the control valve through the **P** port pushes open the unload poppet (5) and then returns to the transmission case through the **T1** port.

Oil behind the unload poppet (5) returns to the transmission case through the spool (4) and the **T3** port.

Since the poppet 2 (1) and poppet 1 (2) are closed, oil in the hydraulic cylinder does not flow to the transmission case. Thus, the implement remains at its fixed position.

(1) Poppet 2
(2) Poppet 1
(3) Plunger
(4) Spool
(5) Unload Poppet

P : Pump Port
C : Cylinder Port
T1, T2, T3 : Tank Port

W10136350

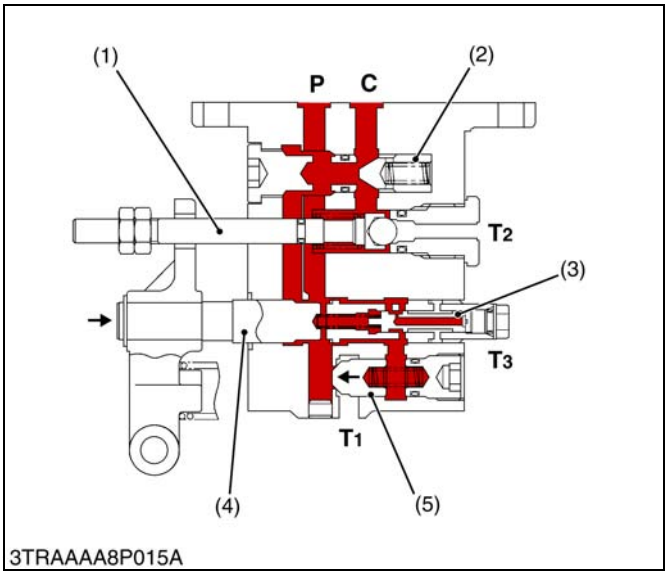

■ Lift

When the control lever is set to the **LIFT** position, the spool (4) is move to the right.

The oil forced into the control valve through the **P** port flows to the back of the unload poppet (5) to close it.

The oil pushes open the poppet 1 (2), and flows into the hydraulic cylinder through the **C** port to lift the implement.

(1) Poppet 2
(2) Poppet 1
(3) Plunger
(4) Spool
(5) Unload Poppet

P : Pump Port
C : Cylinder Port
T1, T2, T3 : Tank Port

W10137360

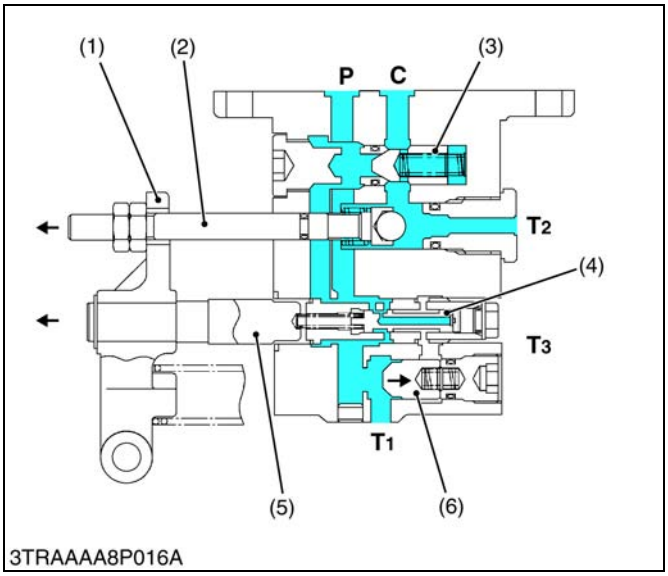

■ Down

When the control lever is moved to **DOWN** position, the spool (5) is move to the left, and the poppet 2 (2) is also move to the left by the lever (1).

Oil in the hydraulic cylinder is forced out to the transmission case through the **T2** port by the weight of the implement, causing the implement to lower.

Oil forced into the control valve through the **P** port pushes open the unload poppet (6) and returns to the transmission case through the **T1** port.

(1) Lever
(2) Poppet 2
(3) Poppet 1
(4) Plunger
(5) Spool
(6) Unload Poppet

P : Pump Port
C : Cylinder Port
T1, T2, T3 : Tank Port

W10138410

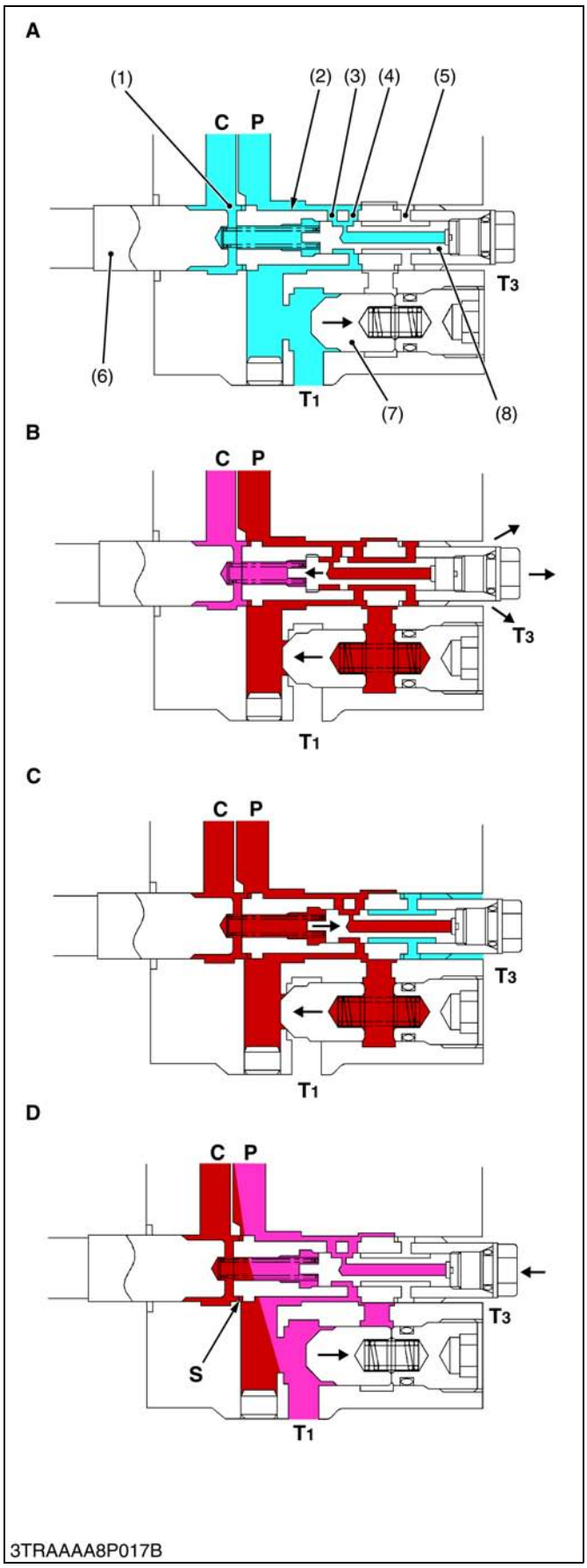

■ Shockless Mechanism

The control valve is provided with a shockless mechanism. This is intended to reduce a sudden change of the oil pressure and flow when the three point linkage system begins to going up or stop going up. As a result, operator does not feel the unpleasant shock.

1. When the three point linkage system starts going up, the spool (6) is located slightly at the right from the neutral position. (Fig. **B**)
   A small amount of oil is kept constantly flowing from the pump through the slit into the cylinder port. (A fixed flow rate is guaranteed.)
2. The oil fed from hydraulic pump flows in passages 3 (3) and 4 (4) by the difference of the hole diameter, and pushes the plunger (8) to the left. Then the passages 4 (4) and 5 (5) connect to each other, and the oil between them return to the transmission case through the clearance between the valve body and the spool (6) and through the **T_3** port. In this way, the plunger (8) returns to the rightmost position. (Fig. **B** and **C**)
   Some of the oil coming from the pump is drained into the **T_3** port, which controls the flow rate of the oil going into the cylinder.
3. As a result, the oil pressure is controlled not to rise suddenly. The shock at the start of lifting is thus reduced.
4. When the spool (6) comes close to the neutral position by the motions of feedback linkage, the oil pressure gradually drops by the slit provided in the spool (6). Therefore the shock at the stop of lifting is reduced. (Fig. **D**)

(1) Passage 1
(2) Passage 2
(3) Passage 3
(4) Passage 4
(5) Passage 5
(6) Spool
(7) Unload Poppet
(8) Plunger

P : Pump Port
C : Cylinder Port
S : Slit
T_1, T_3 : Tank Port

W10140620

5. FEEDBACK LINKAGE FOR POSITION CONTROL

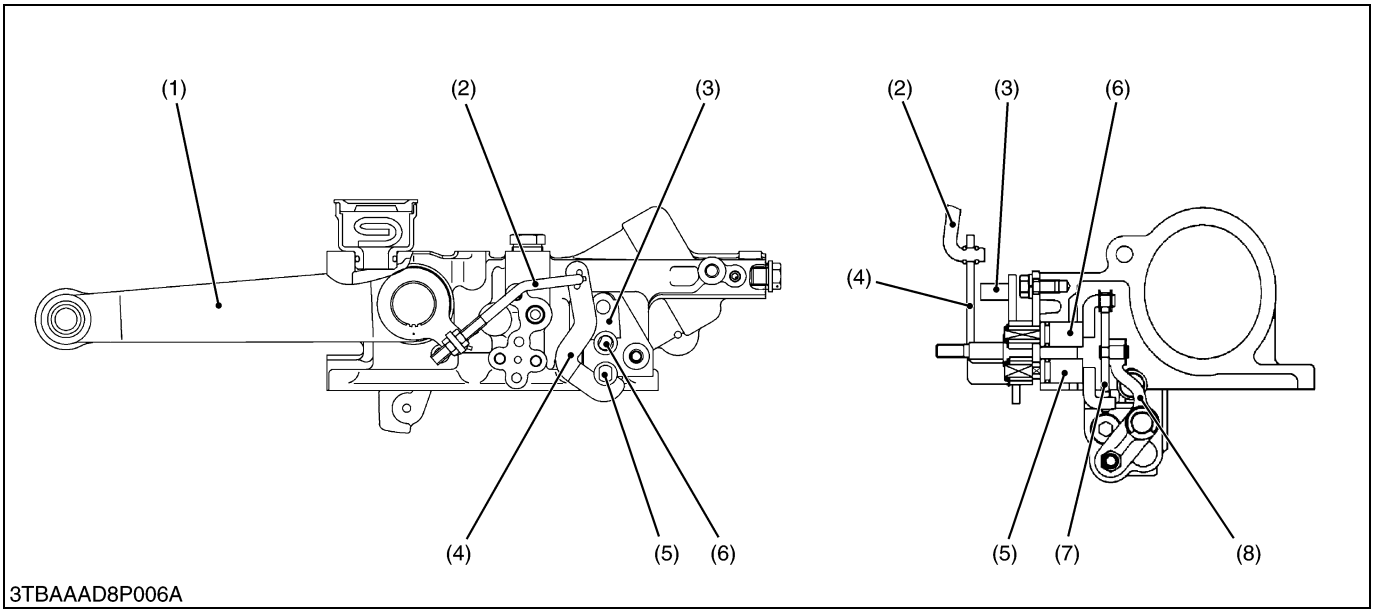

(1) Lift Arm RH
(2) Feedback Rod
(3) Control Lever Arm
(4) Feedback Arm
(5) Feedback Arm Shaft
(6) Control Lever Shaft
(7) Connecting Link
(8) Lever

When the position control lever moved to rearward to lift the implement, the spool of the position control valve is pushed in to form a raising circuit by the motions of control lever arm (3), control lever shaft (6), connecting link (7) and the lever (8). And after the lift arm (1) moves upward, the spool is pulled out and return to form a neutral circuit by the motions of feedback rod (2), feedback arm (4), feedback arm shaft (5), connecting link (7) and the lever (8).

As a result, the implement height can be easily determined in proportion to the set position of the position control lever.

6. HYDRAULIC CYLINDER

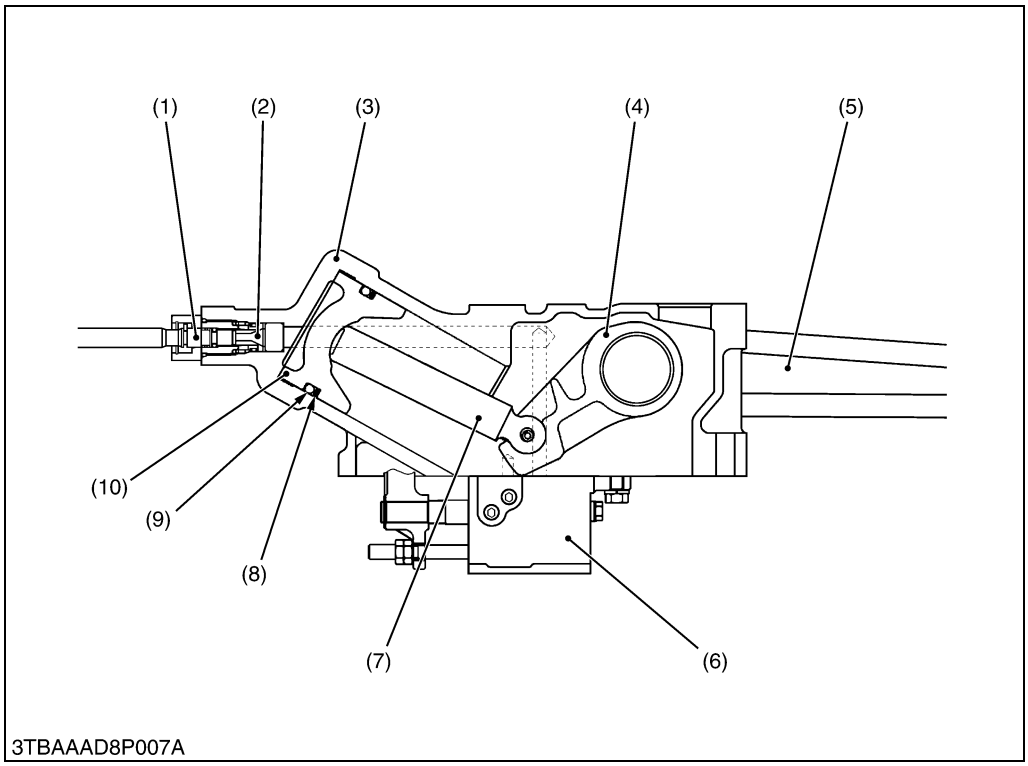

(1) Lowering Speed Adjusting Shaft
(2) Lowering Speed Adjusting Valve
(3) Hydraulic Cylinder
(4) Hydraulic Arm
(5) Lift Arm
(6) Position Control Valve
(7) Hydraulic Rod
(8) Back-up Ring
(9) O-ring
(10) Piston

W10146200

The main components of the hydraulic cylinder are shown in the figure above.

While the lift arm (5) is rising, oil from the hydraulic pump flows into the hydraulic cylinder through the position control valve (6). Then oil pushes out the piston (10).

While the lift arm (5) is lowering, oil in the hydraulic cylinder is discharged to the transmission case through the position control valve (6) by the weight of the implement. At this time, the lowering speed of the implement can be controlled by the lowering speed adjusting valve (2) attached to the hydraulic cylinder (3). Turning the lowering speed adjusting knob clockwise decreases the lowering speed, and counterclockwise increases lowering speed. When the lowering speed adjusting valve (2) is completely closed, the lift arm (5) is held at its position since oil in the hydraulic cylinder is sealed between the piston (10) and lowering speed adjusting valve (2).

7. REMOTE CONTROL VALVE

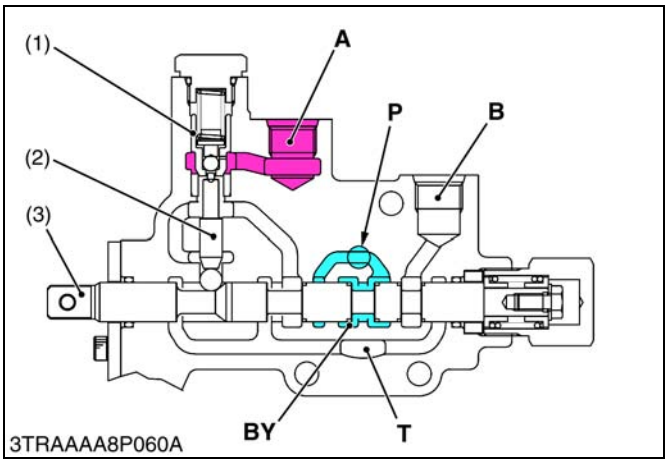

■ Neutral

Pressure-fed oil from the hydraulic pump is delivered into the **P** port, and flows to the rear hydraulic outlet through **BY** port.

At this time, oil from **A** port to the **T** port is blocked by the mechanical check valve (Poppet (1)). Therefore the position of implement is maintained at the set position.

(1) Poppet
(2) Piston
(3) Spool

P : Pump Port
T : Tank Port
BY : BY Port (To Position Control Valve)
A : A Port
B : B Port

W10147800

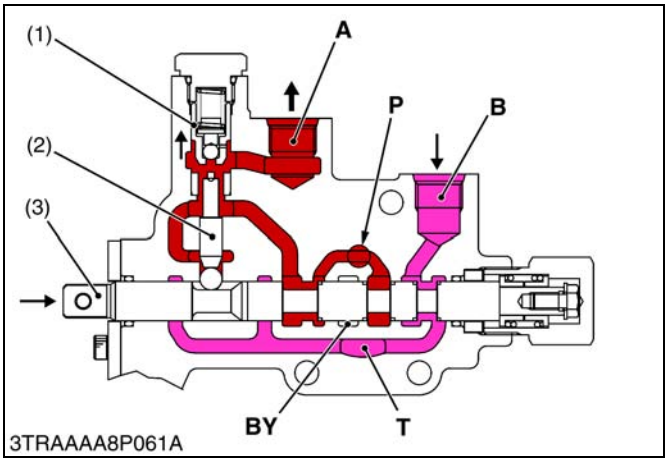

■ Lift

When the remote control valve operating lever is set to **LIFT** position, the spool (3) moves to the right and the passage from **P** port to the **BY** port is blocked by the spool (3).

Then the pressure-fed oil open the poppet (1) and flow through the **A** port to the hydraulic cylinder to lift the implement.

(1) Poppet
(2) Piston
(3) Spool

P : Pump Port
T : Tank Port (To Transmission Case)
BY : BY Port
A : A Port
B : B Port

W10148930

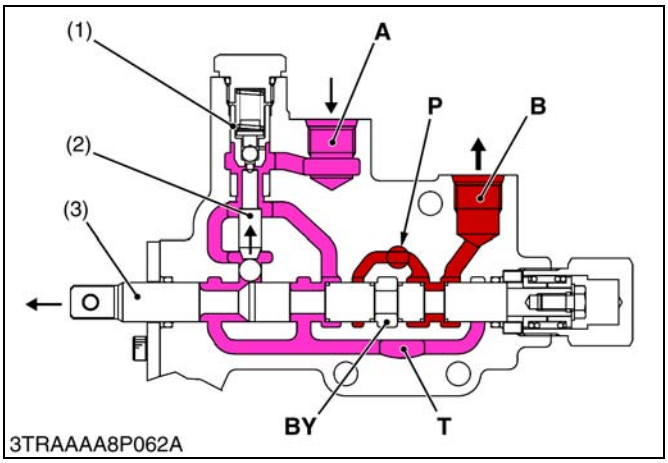

■ Down

When the remote control valve operating lever is set to **DOWN** position, the spool (3) moves to the left and the passage from **P** port to the **BY** port is blocked by the spool (3). At the same time, the piston (2) and poppet (1) moves upward, and open the passage from **A** port to **T** port.

Then the pressure-fed oil flow through the **B** port to the hydraulic cylinder to lower the implement. Return oil from hydraulic cylinder flows from **A** port to the transmission case.

(1) Poppet
(2) Piston
(3) Spool

P : Pump Port
T : Tank Port (To Transmission Case)
BY : BY Port
A : A Port
B : B Port

W10149920

8. HYDRAULIC BLOCK TYPE OUTLET

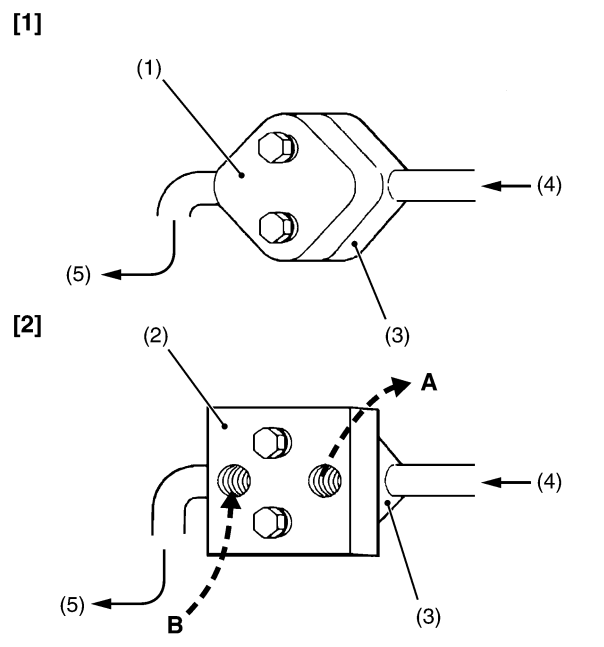

3TBAAAD8P008A

The hydraulic block type outlet is located at the right hand side of the engine.

This hydraulic block type outlet is provided to take power out from the tractor to operate the hydraulic cylinders on the implement, such as front end loader, front blade and so on.

[1] When implement is not attached
[2] When implement is attached
(1) Block Cover
(2) Block Outlet Cover (Option)
(3) Hydraulic Block
(4) From Hydraulic Pump
(5) To Position Control Valve

(A) To implement (Inlet) Max. flow 22.4 L/min. (6.4 U.S.gal/min., 5.4 Imp.gal/min.) No relief valve in the hydraulic block.
(B) From Implement (Outlet)

W10151840

9. REAR HYDRAULIC OUTLET

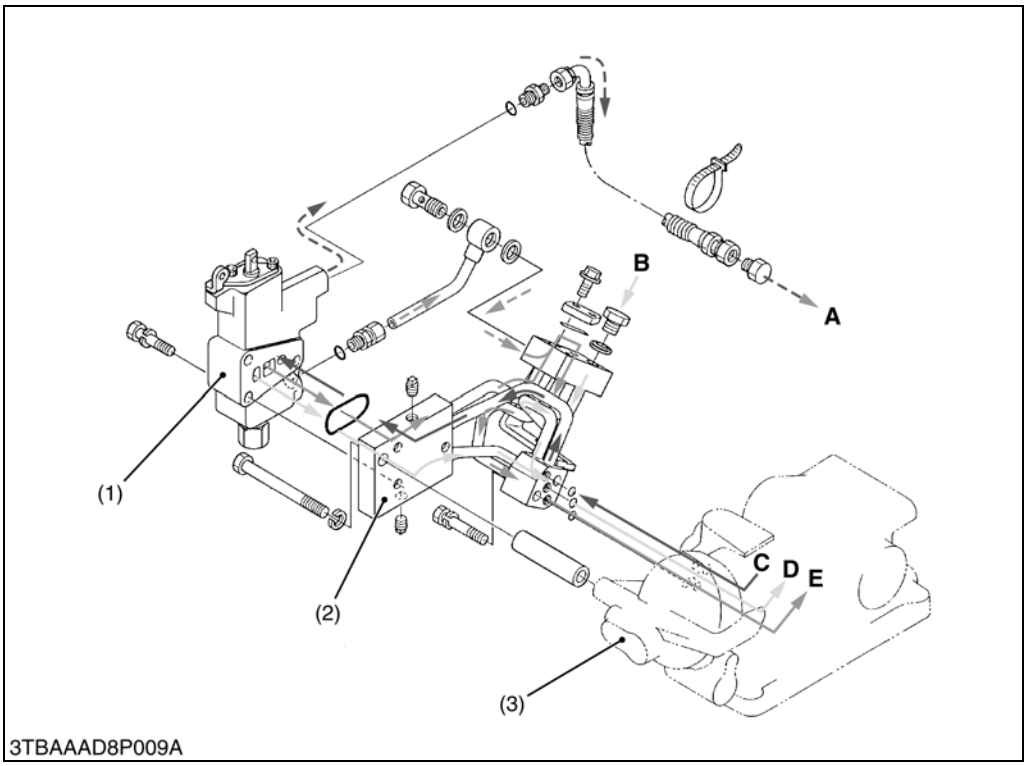

(1) Auxiliary Control Valve
(2) Rear Hydraulic Outlet
(3) Hydraulic Cylinder Body

(A) To Implement
(B) From Implement (Drain)
(C) From Hydraulic Pump
(D) To Transmission Case
(E) To Position Control Valve

W10153280

The rear hydraulic outlet is located at the right hand side of the hydraulic cylinder body.

This rear hydraulic outlet is provided to take power out from the tractor to operate the hydraulic cylinders on the implement.

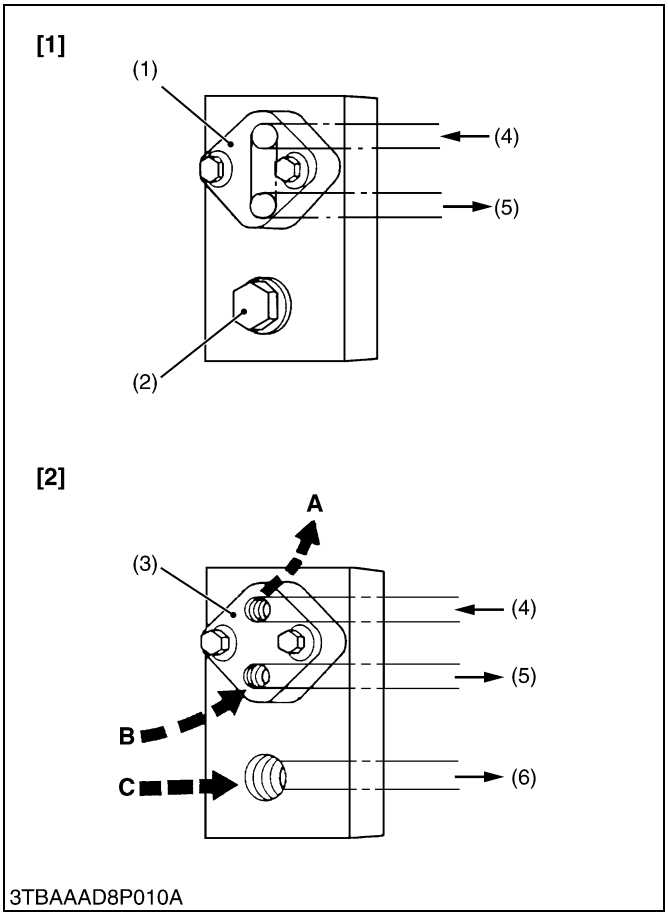

■ **NOTE**

- **If the control valve of implement has the relief valve, the tank port flow from implement should be connected to the port (C).**

[1] When implement is not attached
[2] When implement is attached
(1) Block Cover
(2) Plug
(3) Block Outlet Cover (Option)
(4) From Hydraulic Pump
(5) To Position Control Valve
(6) To Transmission Case

(A) To implement (Inlet) Max. flow 17 L/min. (4.5 U.S.gal/min., 3.7 Imp.gal/min.) Max. pressure 13.2 to 13.7 MPa (135 to 140 kgf/cm^2, 1920 to 1992 psi)
(B) From Implement (Outlet)
(C) From Implement (Drain)

W10154280

SERVICING

CONTENTS

1. TROUBLESHOOTING 8-S1
2. SERVICING SPECIFICATIONS 8-S2
3. TIGHTENING TORQUES 8-S4
4. CHECKING, DISASSEMBLING AND SERVICING.....8-S5
   [1] HYDRAULIC PUMP 8-S5
      (1) Checking and Adjusting 8-S5
      (2) Disassembling and Assembling 8-S7
      (3) Servicing 8-S8
   [2] HYDRAULIC CYLINDER ASSEMBLY (HYDRAULIC CYLINDER, POSITION CONTROL VALVE, RELIEF VALVE AND OTHERS).....8-S9
      (1) Checking and Adjusting 8-S9
      (2) Disassembling and Assembling 8-S10
      (3) Servicing 8-S17

1. TROUBLESHOOTING

Symptom	Probable Cause	Solution	Reference Page
Implement Does Not Rise (No Noise)	• Control valve broken • Control valve improperly adjusted • Control valve improperly assembled • Relief valve spring damaged • Spool sticks • Piston O-ring or cylinder damaged	Replace Adjust Repair Replace Repair Replace	8-S13 8-S15 8-S15 8-S15 8-S15 8-S14
(Noise)	• Oil filter cartridge clogged • Suction pipe loosen or broken • Suction pipe connecting hose loosen or broken • Suction pipe O-ring broken • Insufficient transmission oil • Relief valve setting pressure too low • Hydraulic pump broken	Clean or replace Repair or replace Repair or replace Replace Refill Adjust or replace Replace	– – – – G-8 8-S9, S15 8-S7
Implement Does Not Reach Maximum Height	• Feedback rod improperly adjusted	Adjust	8-S10
Implement Does Not Lower	• Control valve malfunctioning	Repair or replace	8-S15
Implement Drops by Its Weight	• Hydraulic cylinder worn or damaged • Piston O-ring worn or damaged • Control valve malfunctioning	Replace Replace Replace	8-S13 8-S14 8-S13
Implement Hunts	• Control valve improperly adjusted	Adjust	8-S15

W10143220

2. SERVICING SPECIFICATIONS

Item		Factory Specification	Allowable Limit
[Hydraulic Pump] Pump Delivery at Engine 2600 rpm, Oil Temperature 50 °C, 122 °F	at no pressure [B1710, B2110, B2410]	16.6 L/min. 4.4 U.S.gal/min. 3.7 Imp.gal/min.	–
	[B2710]	24.4 L/min. 6.4 U.S.gal/min. 5.4 Imp.gal/min.	–
	[B1710, B2110, B2410] at 13.7 MPa 140 kgf/cm^2 1991 psi	15.8 L/min. 4.2 U.S.gal/min. 3.5 Imp.gal/min.	–
	[B2710] at 15.2 MPa 155 kgf/cm^2 2204 psi	23.0 L/min. 6.1 U.S.gal/min. 5.1 Imp.gal/min.	–
Gear to Casing	Clearance	–	0.15 mm 0.0059 in.
Gear Shaft to Bushing	Clearance	0.020 to 0.091 mm 0.0008 to 0.0036 in.	0.12 mm 0.0047 in.
Gear Shaft	O.D.	14.970 to 14.980 mm 0.5894 to 0.5898 in.	–
Bushing	I.D.	15.000 to 15.061 mm 0.5906 to 0.5930 in.	–
Side Plate	Thickness	2.48 to 2.50 mm 0.0976 to 0.0984 in.	2.40 mm 0.0945 in.
Relief Valve	Setting Pressure [B1710, B2110, B2410]	13.2 to 13.7 MPa 135 to 140 kgf/cm^2 1920 to 1991 psi	–
	[B2710]	14.7 to 15.2 MPa 150 to 155 kgf/cm^2 2132 to 2204 psi	–
Lift Arm	Free Play	5 to 10 mm 0.20 to 0.40 in.	–
Hydraulic Cylinder	I.D.	70.05 to 70.10 mm 2.7579 to 2.7598 in.	70.15 mm 2.7618 in.

W10138740

Item		Factory Specification	Allowable Limit
Hydraulic Arm Shaft to Bushing	Clearance	0.20 to 0.110 mm 0.0008 to 0.0043 in.	0.30 mm 0.0118 in.
Hydraulic Arm Shaft, Right	O.D.	37.925 to 37.950 mm 1.4931 to 1.4941 in.	–
Hydraulic Arm Shaft, Left	O.D.	33.925 to 33.950 mm 1.3356 to 1.3366 in.	–
Bushing, Right	I.D.	37.970 to 38.035 mm 1.4949 to 1.4974 in.	–
Bushing, Left	I.D.	33.970 to 34.035 mm 1.3374 to 1.3400 in.	–

W10138740

3. TIGHTENING TORQUES

Tightening torques of screws, bolts and nuts on the table below are especially specified.
(For general use screws, bolts and nuts : See page G-9.)

Item	N·m	kgf·m	ft-lbs
Delivery pipe nut for power steering	65 to 75	6.6 to 7.7	47.9 to 55.3
Hydraulic pump cover mounting screw	34.3 to 39.2	3.5 to 4.0	25.3 to 28.9
Connecting plate mounting bolt and nut	47.1 to 56.9	4.8 to 5.8	34.7 to 42.0
ROPS frame mounting screw	77.5 to 90.1	7.9 to 9.2	57.2 to 66.5
3-point hitch shaft setting screw	14.7 to 19.6	1.5 to 2.0	10.8 to 14.5
3-point hitch shaft setting screw lock nut	43.0 to 47.0	4.4 to 4.8	31.7 to 35.4
Rear wheel cotter setting bolt and nut	123 to 147	12.6 to 15.0	91.1 to 108.5
Rear wheel hub mounting nut	108 to 125	11.0 to 12.8	79.6 to 92.6
Rear wheel mounting screw and nut	108 to 125	11.0 to 12.8	79.6 to 92.6
Hydraulic pipe joint bolt	34 to 39	3.47 to 3.98	25.1 to 28.8
Delivery pipe joint bolt	34 to 39	3.47 to 3.98	25.1 to 28.8
Hydraulic cylinder assembly mounting screw and nut	39.2 to 44.1	4.0 to 4.5	28.9 to 32.5
Connecting plate mounting screw	39.2 to 44.1	4.0 to 4.5	28.9 to 32.5
Position control valve mounting screws	23.6 to 27.4	2.4 to 2.8	17.4 to 20.2
Relief valve plug	49.0 to 68.6	5.0 to 7.0	36.2 to 50.6
Plug 1	29.4 to 49.0	3.0 to 5.0	21.7 to 36.2
Plug 2	29.4 to 49.0	3.0 to 5.0	21.7 to 36.2
Plug 3	39.2 to 58.8	4.0 to 6.0	28.9 to 43.4
Plug 4	7.85 to 11.77	0.8 to 1.2	5.79 to 8.68
Plug 1 (Remote control valve)	29.4 to 49.0	3.0 to 5.0	21.7 to 36.2
Plug 2 (Remote control valve)	39.2 to 58.8	4.0 to 6.0	28.9 to 43.4
Bracket mounting screw	4.9 to 7.8	0.5 to 0.8	3.6 to 5.8

W10127360

4. CHECKING, DISASSEMBLING AND SERVICING

[1] HYDRAULIC PUMP

(1) Checking and Adjusting

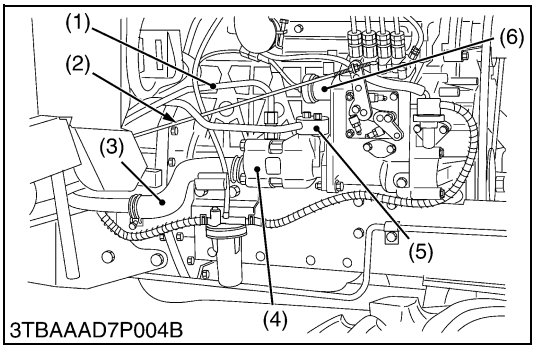

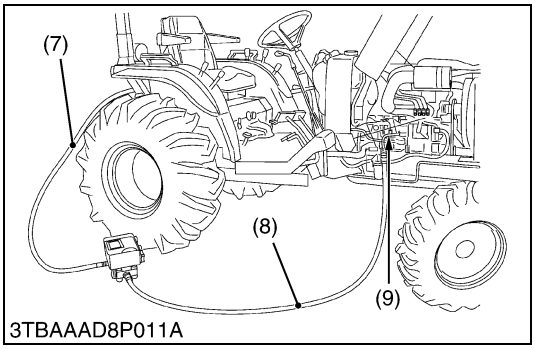

Flowmeter Connecting and Test Preparation

■ **IMPORTANT**

- **When using a flowmeter other than KUBOTA specified flowmeter (Code No.: 07916-52792), be sure to use the instructions with that flowmeter.**
- **In this hook-up, there is no relief valve. Therefore while testing, do not close the flowmeter loading valve completely.**

1. Open the hood, then remove the front grille, side cover (RH) and disconnect the battery grounding cord.
2. Remove the steering wheel, meter panel and panel under cover.
3. Disconnect the accelerator rod (2).
4. Remove the engine stop solenoid (6).
5. Remove the power steering delivery pipe and pipe clamps.
6. Disconnect the hydraulic delivery pipe for 3-point hitch (5).
7. Install the adaptor **61** (9) to the hydraulic pump for 3-point hitch.
8. Reassemble the power steering delivery pipe.
9. Reinstall the engine stop solenoid and accelerator rod.
10. Connect the hydraulic test hose (8) (Code No.: 07916-52651) to the adaptor **61** and flowmeter (Code No.: 07916-52791) inlet port.
11. Connect the another hydraulic test hose (7) to flowmeter outlet port and transmission oil filling port.
12. Open the flowmeter loading valve completely. (Turn counterclockwise).
13. Start the engine and set the engine speed at 2600 rpm.
14. Slowly close the loading valve to generate the pressure approx. same as relief valve setting pressure (maximum).
15. Hold in this condition until oil temperature reaches approx. 50 °C (122 °F)

(Reference)

- Adaptor is included in the adaptor set (Code No.: 07916-54031).

(1) Power Steering Delivery Pipe
(2) Accelerator Rod
(3) Suction Hose
(4) Hydraulic Pump
(5) 3-Point Hitch Delivery Pipe
(6) Engine Stop Solenoid
(7) Hydraulic Test Hose
(8) Hydraulic Test Hose
(9) Adaptor **61**

W10116200

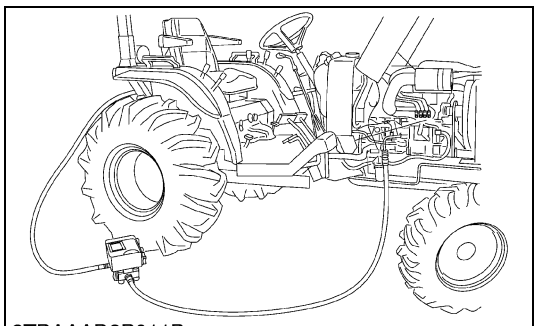
3TBAAAD8P011B

Pump Test

■ **NOTE**

- **Before pump testing, perform the flowmeter connecting and test preparation. (See page 8-S5.)**

1. Open the loading valve completely.
2. Start the engine and set at approx. 2600 rpm.
3. Read and note the pump delivery at no pressure.
4. Slowly close the loading valve to increase pressure (rated pressure).
5. Read and note the pump flow at rated pressure.
6. Open the loading valve and stop the engine.

Condition

- Engine speed : Approx. 2600 rpm
- Rated pressure (B1710, B2110, B2410) : 13.7 MPa
  140 kgf/cm^2
  1991 psi
  (B2710) : 15.2 MPa
  155 kgf/cm^2
  2204 psi
- Oil temperature : 50 °C
  122 °F

(Reference)

Hydraulic pump delivery at no pressure	Factory spec.	B1710 B2110 B2410	Above 16.6 L/min. 4.4 U.S.gal/min. 3.7 Imp.gal/min.
		B2710	Above 24.4 L/min. 6.4 U.S.gal/min. 5.4 Imp.gal/min.
Hydraulic pump delivery at rated pressure	Factory spec.	B1710 B2110 B2410	Above 15.8 L/min. 4.2 U.S.gal/min. 3.5 Imp.gal/min.
		B2710	Above 23.0 L/min. 6.1 U.S.gal/min. 5.1 Imp.gal/min.

W10119890

(2) Disassembling and Assembling

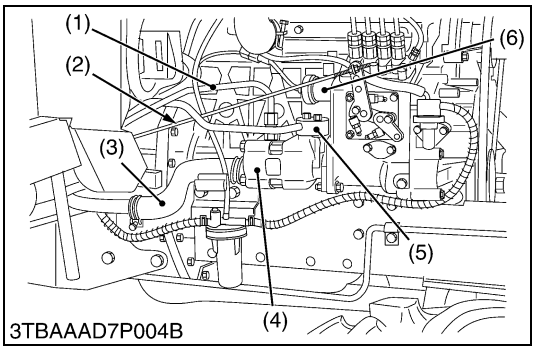

Removing Hydraulic Pump

1. Open the bonnet then remove the front grille, side cover (RH) and disconnect the battery grounding cord.
2. Disconnect the connector of the engine stop solenoid (6) and accelerator rod (2).
3. Disconnect the power steering delivery pipe (1) and 3-point hitch delivery pipe (5).
4. Disconnect the suction hose (3) and remove the hydraulic pump (4).

(When reassembling)

- Apply liquid gasket (Three Bond 1208D or equivalent) to engine stop solenoid.

■ **NOTE**

- **For fastening hydraulic pipe nut, use two wrenches. Hold the fitting with a wrench, turn the pipe nut another wrench to avoid damage at fitting installed part.**

Tightening torque	Delivery pipe nut for power steering	65 to 75 N·m 6.6 to 7.7 kgf·m 47.9 to 55.3 ft-lbs

(1) Power Steering Delivery Pipe
(2) Accelerator Rod
(3) Suction Hose
(4) Hydraulic Pump
(5) 3-Point Hitch Delivery Pipe
(6) Engine Stop Solenoid

W10125150

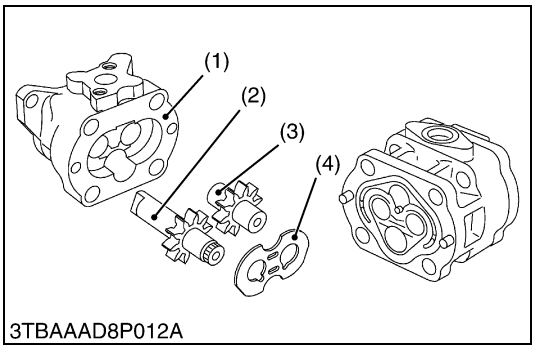

Cover, Side Plate and Gear

1. Secure the hydraulic pump with a vise, and remove the cover.
2. Remove the side plate (4).
3. Remove the drive gear (2) and driven gear (3) from the casing (1).

(When reassembling)

- Take care not to damage the O-ring.
- Align the holes of the cover and casing.
- Install the side plate, noting its location and direction.
- Install the gears, noting its direction.

Tightening torque	Cover mounting screw	34.3 to 39.2 N·m 3.5 to 4.0 kgf·m 25.3 to 28.9 ft-lbs

(1) Casing
(2) Drive Gear
(3) Driven Gear
(4) Side Plate

W10127500

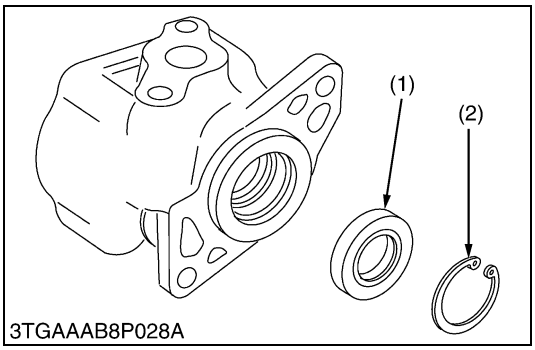

Oil Seal

1. Remove the internal snap ring (2), and remove the oil seal (1).

(When reassembling)

- If the oil seal is defective, worn or scratched, replace it.

(1) Oil Seal
(2) Internal Snap Ring

W10129650

(3) Servicing

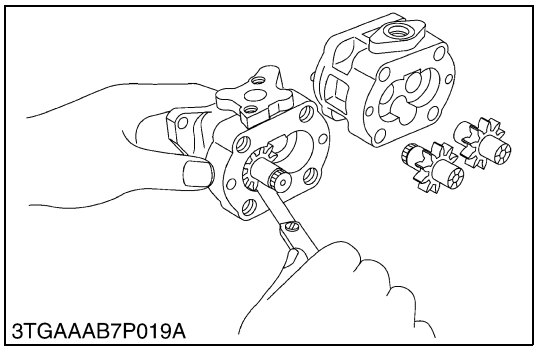
3TGAAAB7P019A

Clearance between Tip of Gear Tooth and Casing

1. Measure the clearance between gear and casing at several points with feeler gauge.
2. If the clearance exceeds the allowable limit, replace the assembly.

Clearance between tip of gear tooth and casing	Allowable limit	0.15 mm 0.0059 in.

W10130690

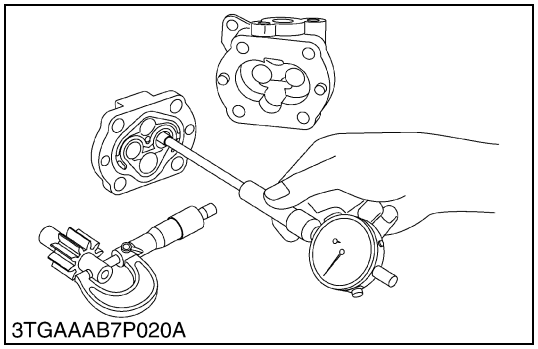
3TGAAAB7P020A

Clearance between Bushing and Shaft

1. Measure the shaft O.D. with an outside micrometer.
2. Measure the bushing I.D. with a cylinder gauge.
3. If the clearance exceeds the allowable limit, replace it.

Clearance between bushing and shaft	Factory spec.	0.020 to 0.091 mm 0.0008 to 0.0036 in.
	Allowable limit	0.12 mm 0.0047 in.

Shaft O.D.	Factory spec.	14.970 to 14.980 mm 0.5894 to 0.5898 in.
Bushing I.D.	Factory spec.	15.000 to 15.061 mm 0.5906 to 0.5930 in.

W10132840

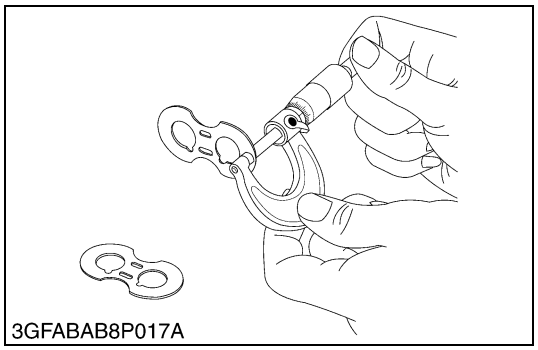
3GFABAB8P017A

Side Plate Thickness

1. Measure the side plate thickness with an outside micrometer.
2. If the thickness is less than the allowable limit, replace it.

Side plate thickness	Factory spec.	2.48 to 2.50 mm 0.0976 to 0.0984 in.
	Allowable limit	2.40 mm 0.0945 in.

W10134390

[2] HYDRAULIC CYLINDER ASSEMBLY (HYDRAULIC CYLINDER, POSITION CONTROL VALVE, RELIEF VALVE AND OTHERS)

(1) Checking and Adjusting

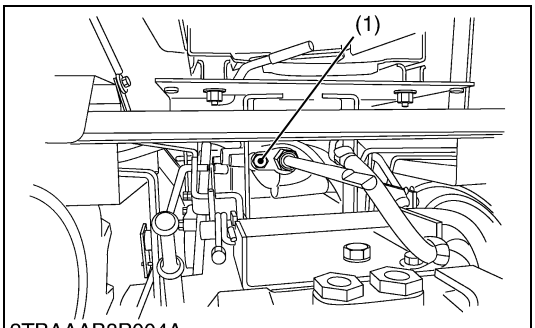

3TBAAAB8P004A

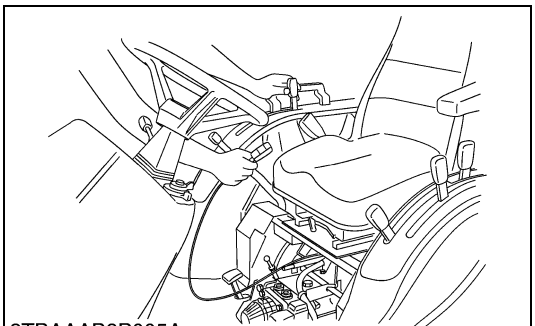
3TBAAAB8P005A

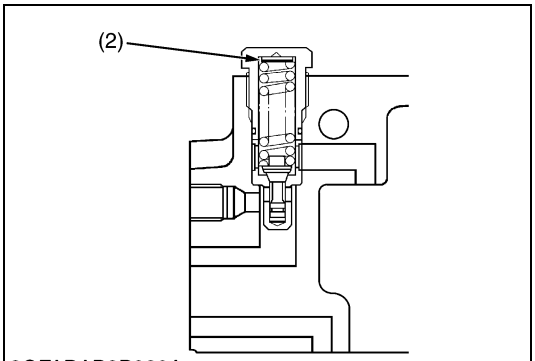

3GFABAB8P020A

Relief Valve Setting Pressure

1. Remove the seat under cover.
2. Remove the plug (1) from front of hydraulic cylinder body.
3. Install the adaptor **58**. Then connect the cable and pressure gauge to adaptor **58**.
4. Remove the feedback rod lock nut and spring.
5. Start the engine and set at maximum speed.
6. Move the hydraulic control lever all way up to operate the relief valve and read the gauge.
7. If the pressure is not within the factory specifications, adjust relief valve with the adjusting shims (2).
8. After checking the pressure, reinstall the spring and feedback rod lock nut.

Relief valve setting pressure	Factory spec.	B1710 B2110 B2410	13.2 to 13.7 MPa 135 to 140 kgf/cm^2 1920 to 1991 psi
		B2710	14.7 to 15.2 MPa 150 to 155 kgf/cm^2 2132 to 2204 psi

Condition

- Engine speed : Maximum
- Oil temperature : 45 to 55 °C
  113 to 131 °F

(Reference)

- Thickness of shims (2) : 0.1 mm (0.0039 in.), 0.2 mm (0.0079 in.)

(1) Plug (2) Shim

W10135580

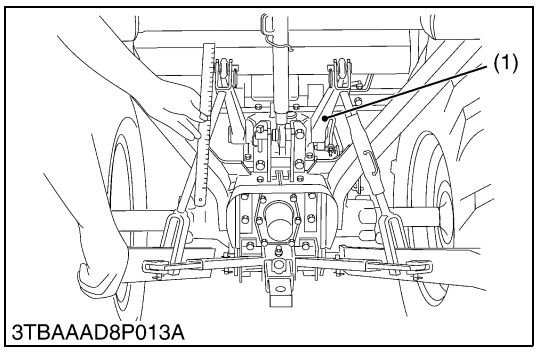

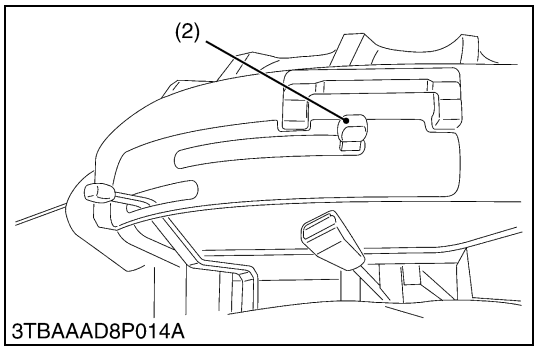

Lift Arm Free Play

1. Set the position control lever (2) to the lowest position.
2. Start the engine, and set at the idling speed.
3. Move the position control lever (2) to the uppermost position.
4. Move the lift arm (1) to the upper end by hand and measure the free play.
5. If the measurement is not within the factory specifications, adjust the free play by changing the position control feedback rod setting length.

Lift arm free play	Factory spec.	5 to 10 mm 0.20 to 0.40 in.

(1) Lift Arm
(2) Position Control Lever

W10138860

(2) Disassembling and Assembling

(A) Separating Hydraulic Cylinder Assembly

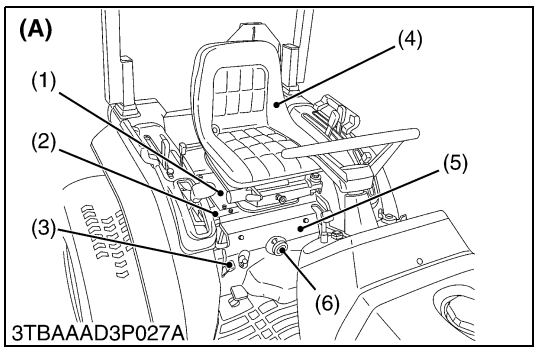

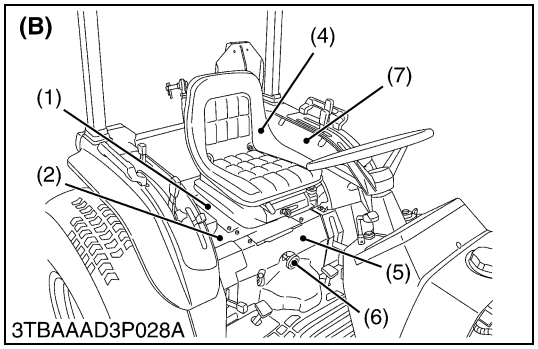

Seat and Seat Under Covers

1. Remove the seat (4) with seat stay (1) as a unit.
2. Remove the lowering speed adjusting knob (6) and front wheel drive lever grip (3) (except B2710) and then remove the seat under cover, front (5).
3. Remove the seat under cover, rear (2).
4. Remove the fender covers (7) (B2710 only).

(1) Seat Stay
(2) Seat Under Cover, Rear
(3) Front Wheel Drive Lever Grip
(4) Seat
(5) Seat Under Cover, Front
(6) Lowering Speed Adjusting Knob
(7) Fender Cover

(A) B1710, B2110, B2410
(B) B2710

W10229790

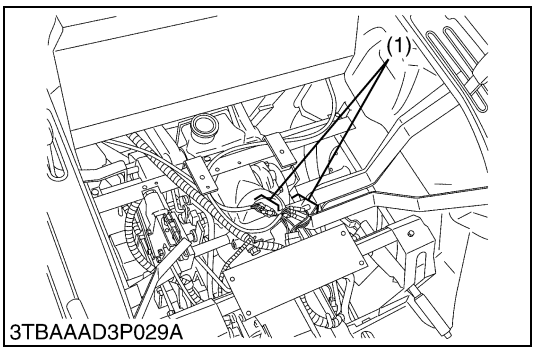

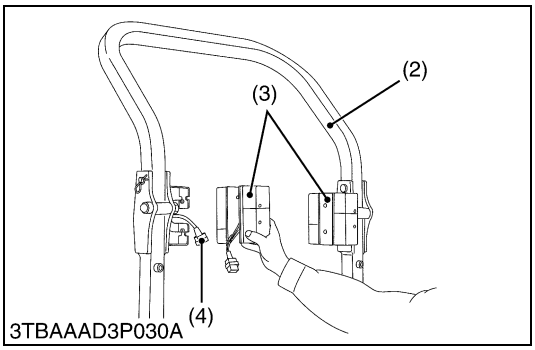

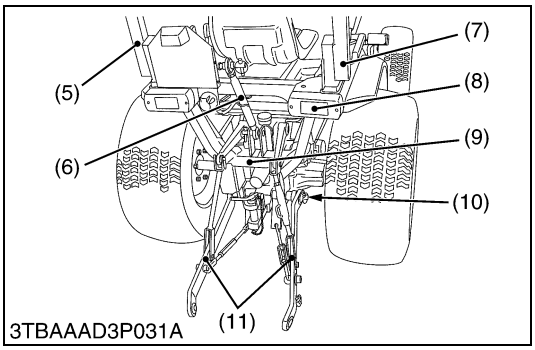

ROPS and 3-Point Linkages

1. Disconnect the connectors (1) of combination light assemblies.
2. Remove the combination light assembly mounting screws and disconnect the couplers (4).
3. Remove the ROPS frame top (2).
4. Remove the top link (6) and remove the lower link (11) and the collar from the 3-point hitch shaft (10).
5. Remove the reflectors (8) with frame.
6. Remove the ROPS to fender mounting screws.
7. Remove the PTO shaft cover (9) and the connecting plate of ROPS.
8. Disconnect the wiring harness of number plate light and trailer coupler.
9. Remove the left and right side of ROPS frame (5), (7).
10. Remove the 3-point hitch shaft (10).

(When reassembling)

Tightening torque	Connecting plate mounting bolt and nut	47.1 to 56.9 N·m 4.8 to 5.8 kgf·m 34.7 to 42.0 ft-lbs
	ROPS frame mounting screw	77.5 to 90.1 N·m 7.9 to 9.2 kgf·m 57.2 to 66.5 ft-lbs
	3-point hitch shaft setting screw	14.7 to 19.6 N·m 1.5 to 2.0 kgf·m 10.8 to 14.5 ft-lbs
	3-point hitch shaft setting screw lock nut	43.0 to 47.0 N·m 4.4 to 4.8 kgf·m 31.7 to 35.4 ft-lbs

(1) Connectors for Combination Light
(2) ROPS Frame, Top
(3) Combination Light Assembly
(4) Coupler
(5) ROPS Frame, LH
(6) Top Link
(7) ROPS Frame, RH
(8) Reflector
(9) PTO Shaft Cover
(10) 3-Point Hitch Shaft
(11) Lower Link Assembly

W10196750

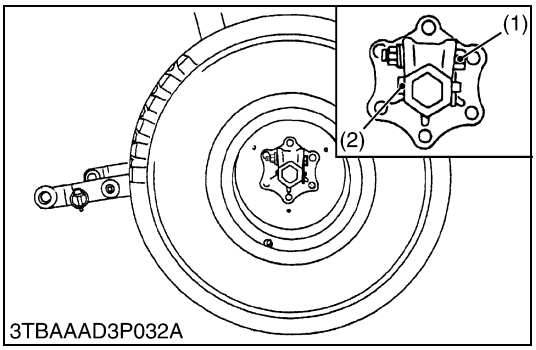

Rear Wheels (B1710, B2110, B2410)

1. Place a jack under the transmission case.
2. Loosen the rear wheel cotter setting bolt and nut (1).
3. Take out the wheel hub pin (2).
4. Take out the rear wheel and support the rear axles by stands.

■ **IMPORTANT**

- **When re-fitting or adjusting a wheel, tighten the bolts to the following torques and then recheck them after driving the tractor approximately 200 m (200 yards).**

(When reassembling)

Tightening torque	Rear wheel cotter setting bolt and nut	123 to 147 N·m 12.6 to 15.0 kgf·m 91.1 to 108.5 ft-lbs
	Rear wheel hub mounting nut	108 to 125 N·m 11.0 to 12.8 kgf·m 79.6 to 92.6 ft-lbs

(1) Cotter Setting Bolt
(2) Wheel Hub Pin

W10232820

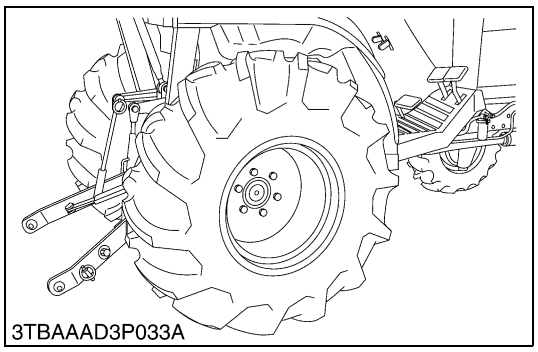
3TBAAAD3P033A

Rear Wheels (B2710)

1. Place hydraulic jack under the main frame rear side and jack up the tractor.
2. Remove the tires.
3. After removing the tires, support the rear axles by stands.

(When reassembling)

Tightening torque	Rear wheel mounting screw and nut	108 to 125 N·m 11.0 to 12.8 kgf·m 79.6 to 92.6 ft-lbs

W10201250

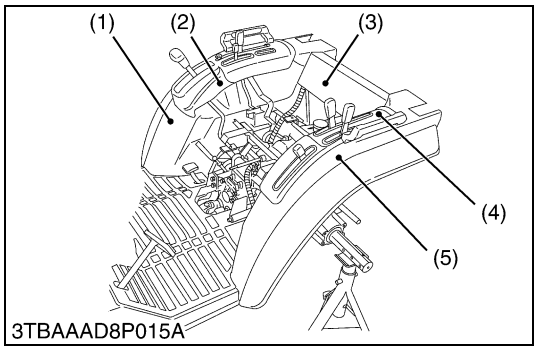

3TBAAAD8P015A

Fenders (B1710, B2110, B2410)

1. Remove the lever grips and remove the lever guides (2), (4).
2. Remove the fenders (1), (5) and fender stay (3).

(1) Fender RH
(2) Lever Guide RH
(3) Fender Stay
(4) Lever Guide LH
(5) Fender LH

W10141510

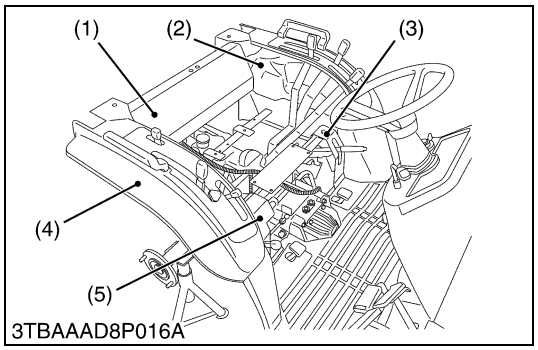

3TBAAAD8P016A

Fenders (B2710)

1. Remove the all lever grips.
2. Remove the lever guide RH (5) and LH (3).
3. Remove the fenders (2), (4) and fender stay (1).

(1) Fender Stay
(2) Fender LH
(3) Lever Guide LH
(4) Fender RH
(5) Lever Guide RH

W10143020

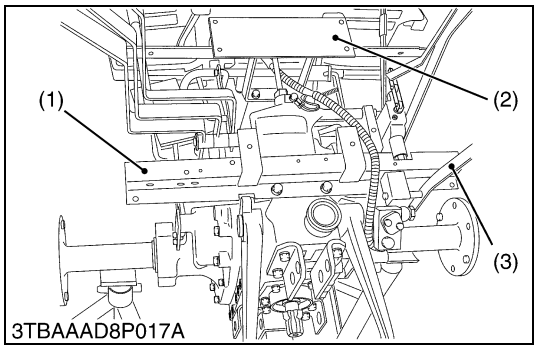

3TBAAAD8P017A

Seat Stays and Bi-speed Turn Lever

1. Disconnect the bi-speed turn lever (3) from the seat stay (rear) (1). (If equipped)
2. Remove the seat stays (1), (2).

(1) Seat Stay, Rear
(2) Seat Stay, Front
(3) Bi-speed Turn Lever

W10144190

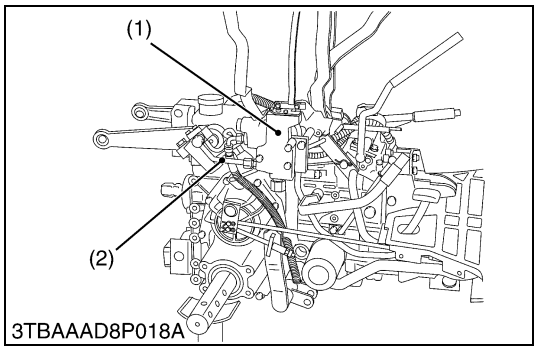

3TBAAAD8P018A

Remote Control Valve

1. Disconnect the hydraulic pipe (2).
2. Remove the remote control valve (1).

(When reassembling)

- Take care not to damage the O-ring.

Tightening torque	Hydraulic pipe joint bolt	34 to 39 N·m 3.47 to 3.98 kgf·m 25.1 to 28.8 ft-lbs

(1) Remote Control Valve
(2) Hydraulic Pipe

W10146000

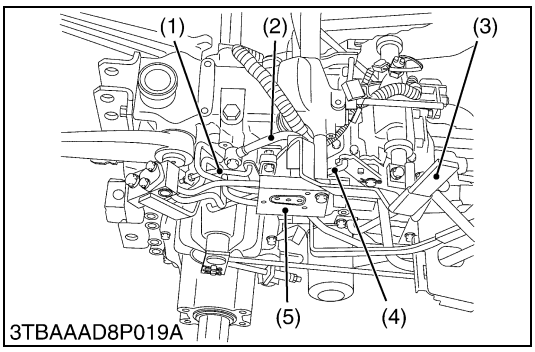

Rear Hydraulic Outlet

1. Remove the feedback rod (1).
2. Remove the rear hydraulic outlet (5) and position control lever (3).
3. Disconnect the differential lock rod (4) and delivery pipe (2).

(When reassembling)

- Take care not to damage the O-rings.

Tightening torque	Delivery pipe joint bolt	34 to 39 N·m 3.47 to 3.98 kgf·m 25.1 to 28.8 ft-lbs

(1) Feedback Rod
(2) Delivery Pipe
(3) Position Control Valve
(4) Differential Lock Rod
(5) Rear Hydraulic Outlet

W10147430

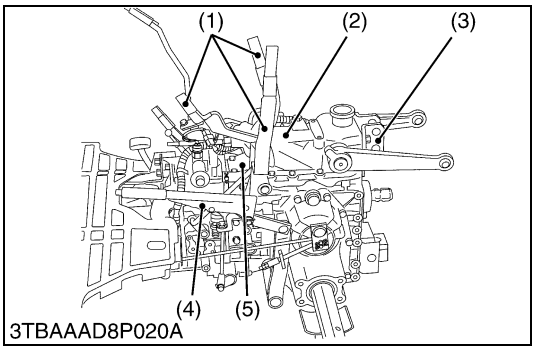

Hydraulic Cylinder Assembly

1. Remove the parking brake lever (4). (Except B2710)
2. Remove the top link bracket LH (3) and shift levers (1).
3. Remove the hydraulic cylinder assembly (2) with connecting plate (5).

(When reassembling)

- Apply liquid gasket to joint face of the differential case and the hydraulic cylinder.

Tightening torque	Hydraulic cylinder assembly mounting screw and nut	39.2 to 44.1 N·m 4.0 to 4.5 kgf·m 28.9 to 32.5 ft-lbs
	Connecting plate mounting screw	39.2 to 44.1 N·m 4.0 to 4.5 kgf·m 28.9 to 32.5 ft-lbs

(1) Shift Lever
(2) Hydraulic Cylinder Assembly
(3) Top Link Bracket LH
(4) Parking Brake Lever
(5) Connecting Plate

W10149950

(B) Disassembling Hydraulic Cylinder Assembly

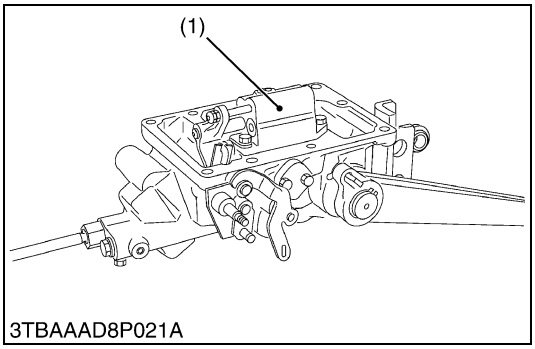

Position Control Valve

1. Remove the position control valve mounting screws, and remove the position control valve (1).

(When reassembling)

- Take care not to damage the O-rings.

Tightening torque	Position control valve mounting screws	23.6 to 27.4 N·m 2.4 to 2.8 kgf·m 17.4 to 20.2 ft-lbs

(1) Position Control Valve

W10151920

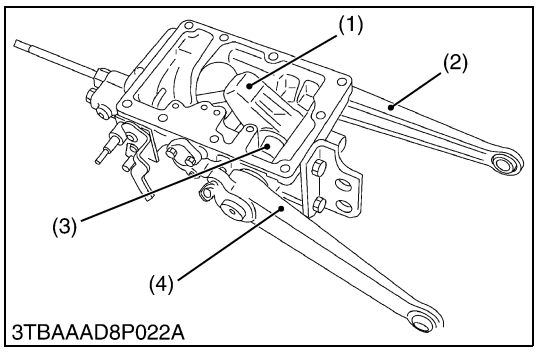

3TBAAAD8P022A

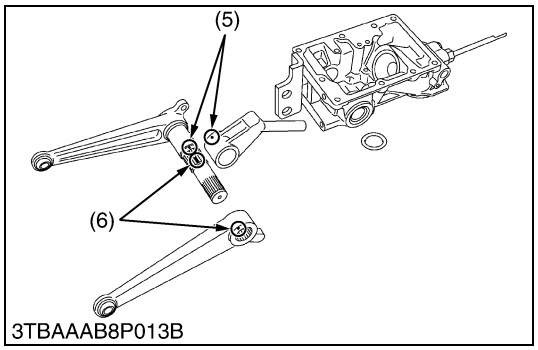

3TBAAAB8P013B

Lift Arm, Hydraulic Arm Shaft and Hydraulic Arm

1. Remove the external snap ring, and remove the lift arm LH (2).
2. Draw out the hydraulic arm shaft (3) and lift arm RH (4) as a unit.

(When reassembling)

- Align the alignment marks (5) of the hydraulic arm and hydraulic arm shaft.
- Align the alignment marks (6) of the lift arm LH and hydraulic arm shaft.
- Apply grease to the right and left bushings and O-rings.
- Take care not to damage the O-rings.

(1) Hydraulic Arm
(2) Lift Arm LH
(3) Hydraulic Arm Shaft
(4) Lift Arm RH
(5) Alignment Mark
(6) Alignment Mark

W10153040

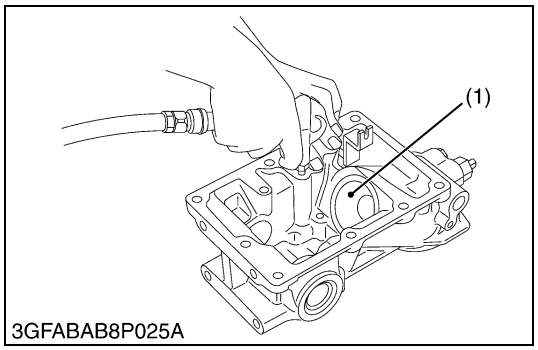

3GFABAB8P025A

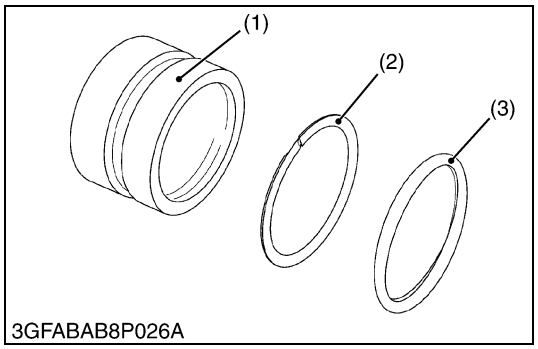

3GFABAB8P026A

Hydraulic Piston

1. Inject the compressed air into the hydraulic cylinder, and take out the hydraulic piston (1).

(When reassembling)

- Take care not to damage the O-ring (3) and backup ring (2).
- Apply transmission fluid to the O-ring.
- Replace the O-ring if it is defective, worn or scratched, which may cause oil leakage.

(1) Hydraulic Piston
(2) Backup Ring
(3) O-ring

W10155700

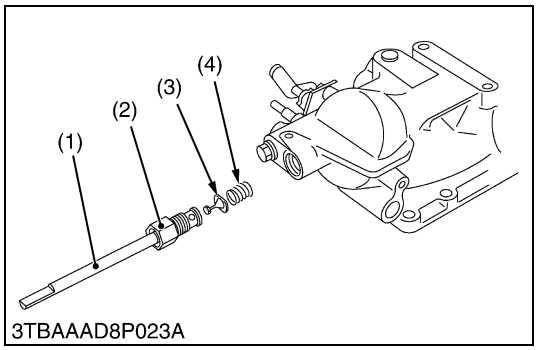

3TBAAAD8P023A

Lowering Speed Adjusting Valve

1. Remove the lowering speed adjusting valve body (2) with the lowering speed adjusting shaft (1).
2. Draw out the poppet (3) and spring (4).

(When reassembling)

- Take care not to damage the O-rings.

(1) Lowering Speed Adjusting Shaft
(2) Lowering Speed Adjusting Valve Body
(3) Poppet
(4) Spring

W10157170

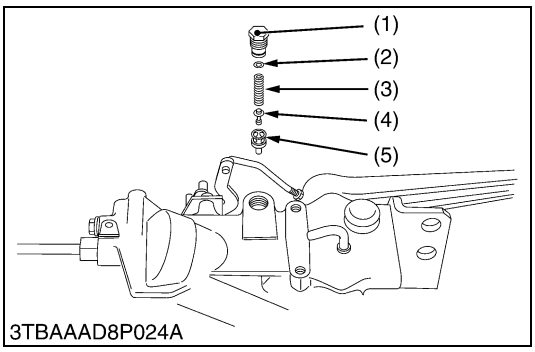

Relief Valve

1. Remove the plug (1), and draw out the shim (2), spring (3), poppet (4) and the valve seat (5).

(When reassembling)

- Take care not to damage the O-ring.

Tightening torque	Relief valve plug	49.0 to 68.6 N·m 5.0 to 7.0 kgf·m 36.2 to 50.6 ft-lbs

■ **IMPORTANT**

- **After disassembling and assembling the relief valve, be sure to adjust the relief valve setting pressure.**

(1) Plug
(2) Shim
(3) Spring
(4) Poppet
(5) Valve Seat

W10158440

(C) Disassembling Position Control Valve

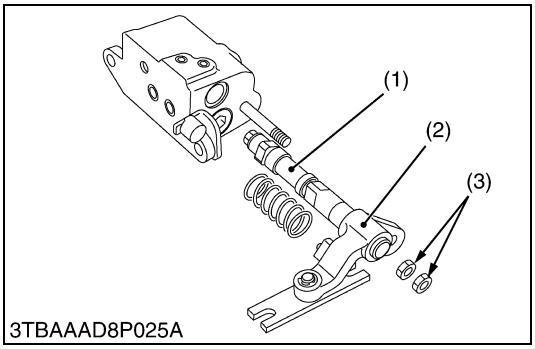

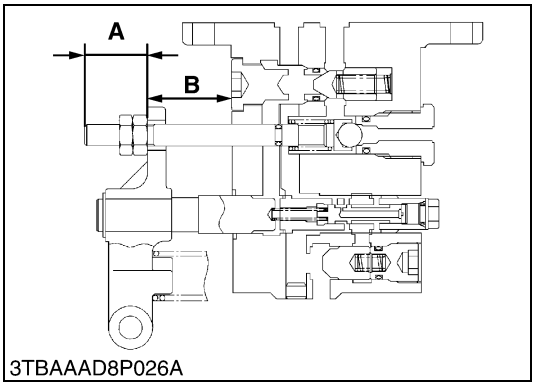

Spool

1. Remove the nuts (3).
2. Draw out the spool (1) with the lever (2).

■ **IMPORTANT**

- **Measure the length (A) before disassembling, and make sure to reset it when reassembling.**

(Reference)

- When the poppet 2 is completely closed, the distance (**B**) between valve body and nut becomes approximately 32.3 to 32.5 mm (1.27 to 1.28 in.).

(1) Spool
(2) Lever
(3) Nuts

W10161170

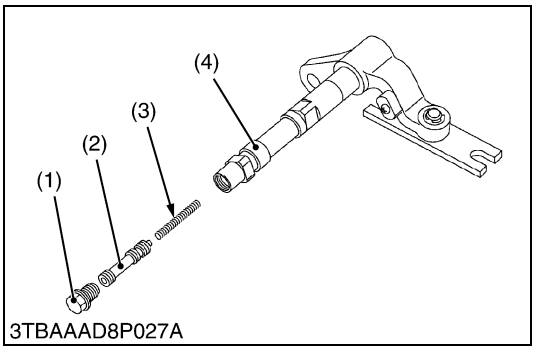

Plunger

1. Remove the plug 4 (1), and draw out the plunger (2) and spring (3) from the spool (4).

(When reassembling)

- Take care not to damage the O-ring.

Tightening torque	Plug 4	7.85 to 11.77 N·m 0.8 to 1.2 kgf·m 5.79 to 8.68 ft-lbs

(1) Plug 4
(2) Plunger
(3) Spring
(4) Spool

W10162790

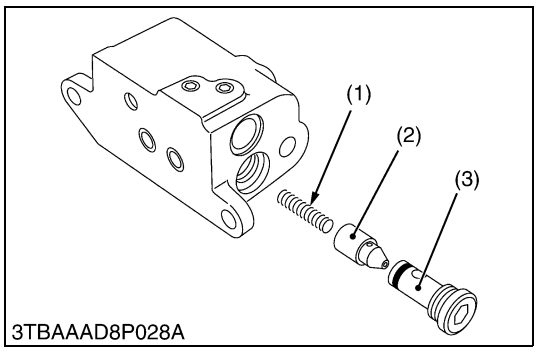

Poppet 1

1. Remove the plug 1 (3), and draw out the poppet 1 (2) and spring (1).

(When reassembling)

- Take care not to damage the O-ring.

Tightening torque	Plug 1	29.4 to 49.0 N·m 3.0 to 5.0 kgf·m 21.7 to 36.2 ft-lbs

(1) Spring
(2) Poppet 1
(3) Plug 1

W10164070

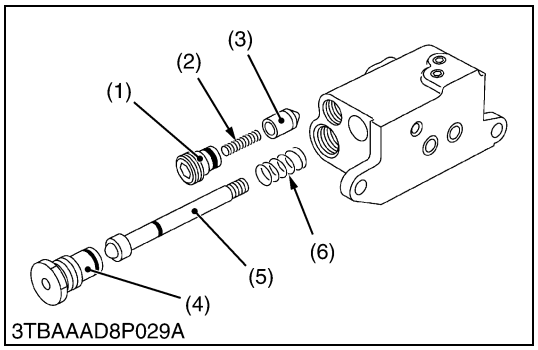

Poppet 2 and Unload Poppet

1. Remove the plug 3 (4), and draw out the poppet 2 (5) and spring (6).
2. Remove the plug 2 (1), and draw out the unload poppet (3) and spring (2).

(When reassembling)

- Take care not to damage the O-ring.

Tightening torque	Plug 3	39.2 to 58.8 N·m 4.0 to 6.0 kgf·m 28.9 to 43.4 ft-lbs
	Plug 2	29.4 to 49.0 N·m 3.0 to 5.0 kgf·m 21.7 to 36.2 ft-lbs

(1) Plug 2
(2) Spring
(3) Unload Poppet
(4) Plug 3
(5) Poppet 2
(6) Spring

W10166020

(D) Disassembling Remote Control Valve

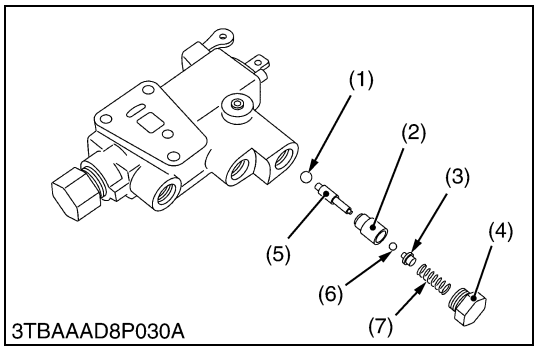

Poppet and Piston (Mechanical Check Valve)

1. Remove the plug 1 (4) and draw out the spring (7), ball guide (3), balls (1), (6), poppet (2) and piston (5).

(When reassembling)

- Take care not to damage the O-ring.

Tightening torque	Plug 1	29.4 to 49.0 N·m 3.0 to 5.0 kgf·m 21.7 to 36.2 ft-lbs

(1) Ball
(2) Poppet
(3) Ball Guide
(4) Plug 1
(5) Piston
(6) Ball
(7) Spring

W10168010

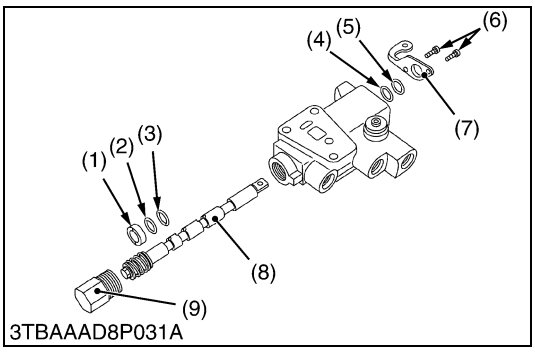

Spool

1. Remove the screws (6), and remove the bracket (7).
2. Remove the plug 2 (9), and draw out the spool (8).

(When reassembling)

- Take care not to damage the O-rings and backup rings.

Tightening torque	Bracket mounting screw	4.9 to 7.8 N·m 0.5 to 0.8 kgf·m 3.6 to 5.8 ft-lbs
	Plug 2	39.2 to 58.8 N·m 4.0 to 6.0 kgf·m 28.9 to 43.4 ft-lbs

(1) Collar
(2) Backup Ring
(3) O-ring
(4) O-ring
(5) Backup Ring
(6) Screw
(7) Bracket
(8) Spool
(9) Plug 2

W10169620

(3) Servicing

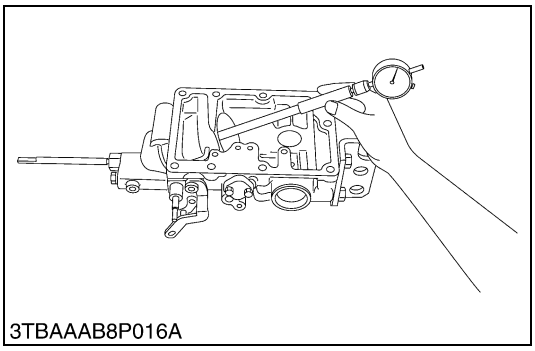

Hydraulic Cylinder Bore

1. Check the cylinder internal surface for scoring or damage.
2. Measure the cylinder I.D. with a cylinder gauge.
3. If the measurement exceeds the allowable limit, replace the hydraulic cylinder block.

Cylinder I.D.	Factory spec.	70.05 to 70.10 mm 2.7579 to 2.7598 in.
	Allowable limit	70.15 mm 2.7618 in.

W10171300

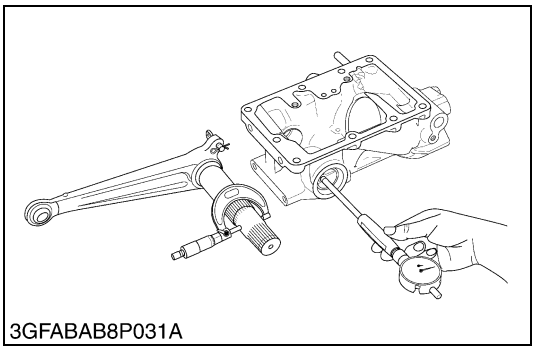

Clearance between Hydraulic Arm Shaft and Bushing

1. Measure the hydraulic arm shaft O.D. with an outside micrometer.
2. Measure the bushing I.D. with a cylinder gauge, and calculate the clearance.
3. If the clearance exceeds the allowable limit, replace the bushing.

Clearance between hydraulic arm shaft and bushing	Factory spec.	0.020 to 0.110 mm 0.0008 to 0.0043 in.
	Allowable limit	0.30 mm 0.0118 in.

Hydraulic arm shaft O.D.	Factory spec.	Right	37.925 to 37.950 mm 1.4931 to 1.4941 in.
		Left	33.925 to 33.950 mm 1.3356 to 1.3366 in.

Bushing I.D. (after press fitted)	Factory spec.	Right	37.970 to 38.035 mm 1.4949 to 1.4974 in.
		Left	33.970 to 34.035mm 1.3374 to 1.3400 in.

W10173080

9 ELECTRICAL SYSTEM

MECHANISM

CONTENTS

1. WIRING DIAGRAM 9-M1
2. STARTING SYSTEM 9-M3
   [1] STARTER 9-M4
   [2] GLOW PLUG 9-M5
   [3] SAFETY SWITCH 9-M5
   [4] ENGINE STOP SOLENOID 9-M6
3. CHARGING SYSTEM 9-M7
   [1] ALTERNATOR 9-M7
   [2] IC REGULATOR 9-M8
4. LIGHTING SYSTEM 9-M9
   [1] HEAD LIGHT 9-M10
   [2] TURN SIGNAL LIGHT 9-M10
   [3] HAZARD LIGHT 9-M11
   [4] POSITION (PARKING) LIGHT 9-M12
   [5] BRAKE LIGHT 9-M13
   [6] EASY CHECKER 9-M13
   [7] TRAILER SOCKET 9-M14
5. GAUGES 9-M15
   [1] FUEL QUANTITY 9-M16
   [2] COOLANT TEMPERATURE 9-M16

1. WIRING DIAGRAM

Color of Wiring

B	Black
Br	Brown
G	Green
L	Blue
Or	Orange
R	Red
W	White
Y	Yellow
BR	Black / Red
BW	Black / White
BY	Black / Yellow
BrB	Brown / Black
GB	Green / Black
GR	Green / Red
GW	Green / White
LOr	Blue / Orange
LW	Blue / White
RB	Red / Black
RG	Red / Green
RL	Red / Blue
RW	Red / White
RY	Red / Yellow
WB	White / Black
WG	White / Green
WL	White / Blue
WR	White / Red
WY	White / Yellow
YB	Yellow / Black
YG	Yellow / Green
YL	Yellow / Blue
YR	Yellow / Red
YW	Yellow / White

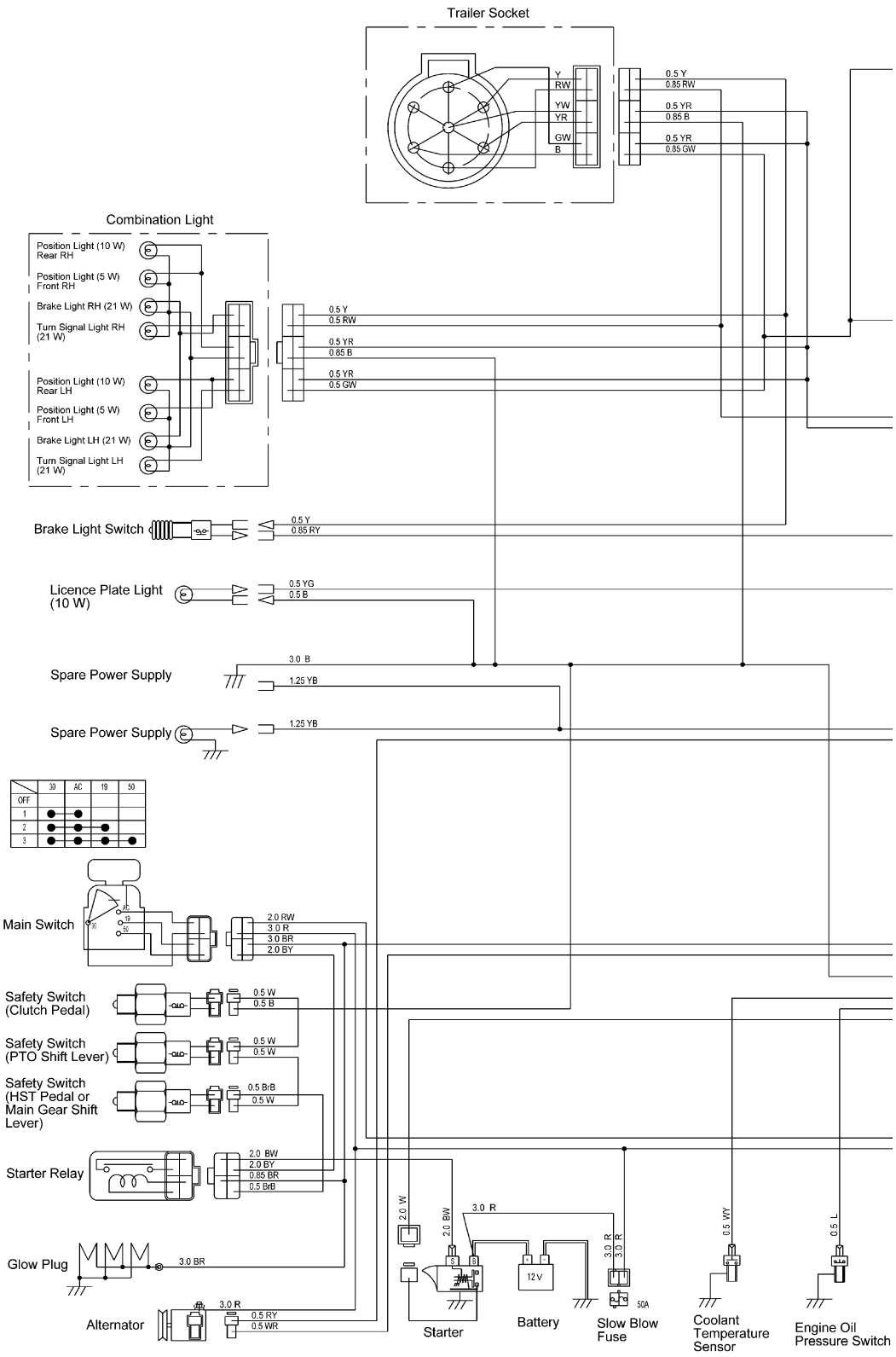

3TBAAAD9P001A

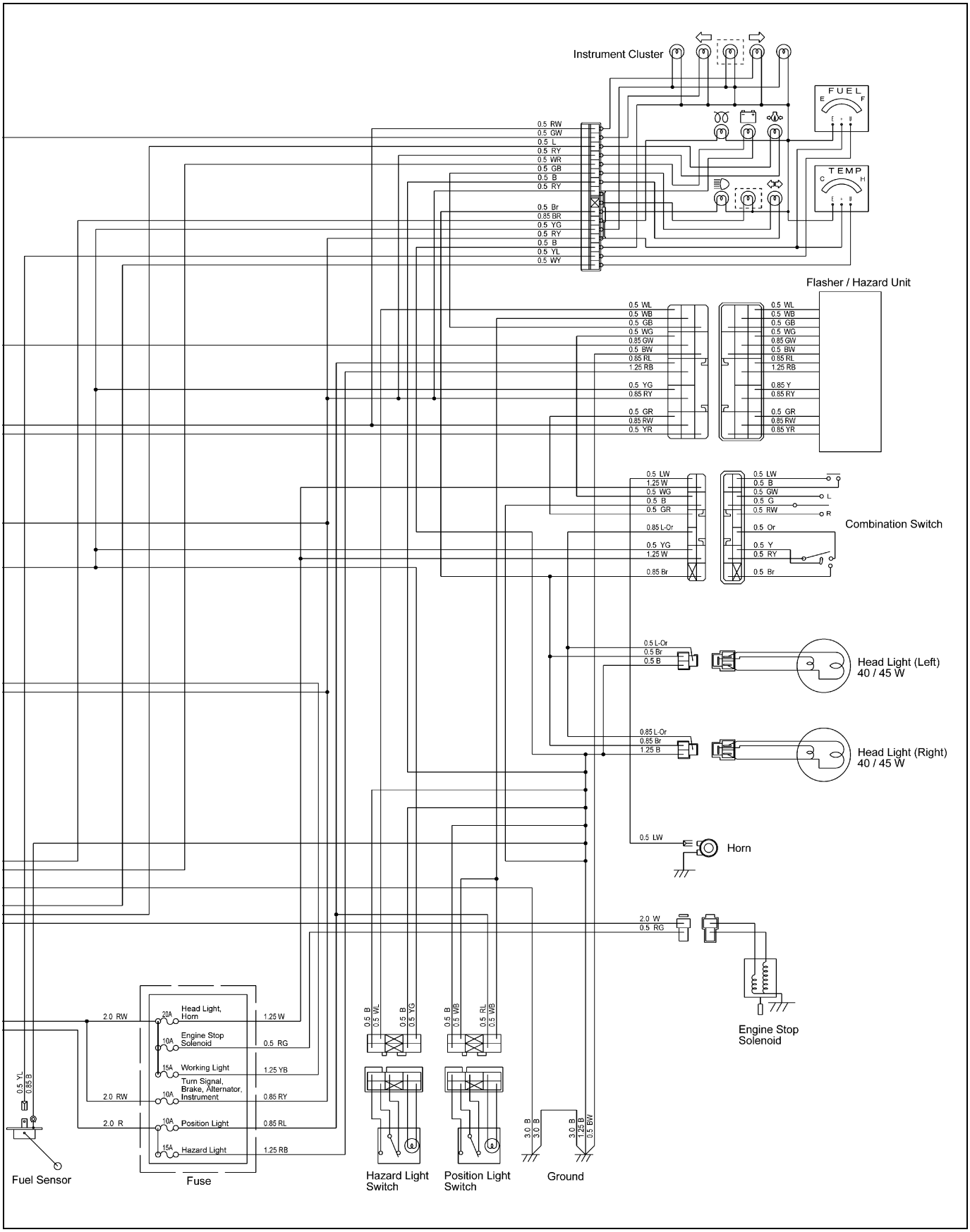
Instrument Cluster
FUEL
E
F
TEMP
C
H
0.5 RW
0.5 GW
0.5 L
0.5 RY
0.5 WR
0.5 GB
0.5 B
0.5 RY
0.5 Br
0.85 BR
0.5 YG
0.5 RY
0.5 B
0.5 YL
0.5 WY
Flasher / Hazard Unit
0.5 WL
0.5 WB
0.5 GB
0.5 WG
0.85 GW
0.5 BW
0.85 RL
1.25 RB
0.5 YG
0.85 RY
0.5 GR
0.85 RW
0.5 YR
0.85 Y
0.5 LW
1.25 W
0.5 WG
0.5 B
0.5 GR
0.85 L-Or
0.5 YG
1.25 W
0.85 Br
0.5 Or
0.5 Y
0.5 RY
0.5 Br
Combination Switch
0.5 L-Or
0.5 Br
0.5 B
Head Light (Left)
40 / 45 W
0.85 L-Or
0.85 Br
1.25 B
Head Light (Right)
40 / 45 W
0.5 LW
Horn
2.0 W
0.5 RG
Engine Stop
Solenoid
2.0 RW
20A
Head Light,
Horn
1.25 W
10A
Engine Stop
Solenoid
0.5 RG
15A
Working Light
1.25 YB
2.0 RW
10A
Turn Signal,
Brake, Alternator,
Instrument
0.85 RY
2.0 R
10A
Position Light
0.85 RL
15A
Hazard Light
1.25 RB
0.5 YL
0.85 B
Fuel Sensor
Fuse
0.5 B
0.5 WL
0.5 B
0.5 YG
Hazard Light
Switch
0.5 B
0.5 WB
0.5 RL
0.5 WB
Position Light
Switch
3.0 B
3.0 B
3.0 B
1.25 B
0.5 BW
Ground

2. STARTING SYSTEM

Main Switch Table				
Key Position \ Terminal	30	AC	19	50
OFF	●			
ON	●	●		
PREHEAT	●	●	●	
START	●	●	●	●

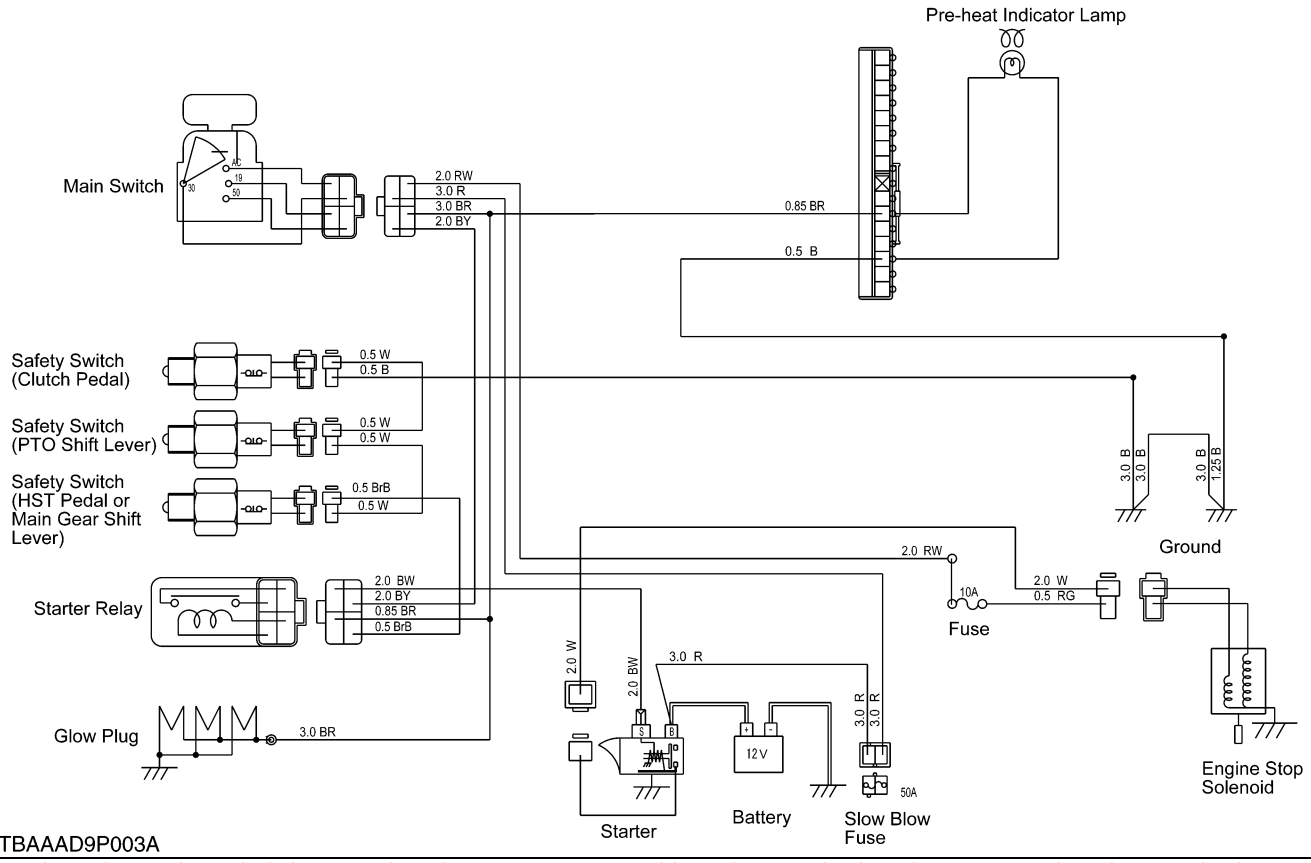

3TBAAAD9P003A

When the main switch is turned to the **PREHEAT** position, the terminal **30** is connected to the terminals **19** and **AC**. The glow plugs become red-hot, and at the same time, the pre-heat indicator lamp also lights on.

When the main switch is then turned to the **START** position with the safety switches on, the terminal **30** is connected to the terminal **50** and **AC**. Consequently, battery current flows to the starter motor and start the engine.

The main switch automatically returns to the **ON** position, the terminal **30** is connected only to the terminal **AC**, thereby causing the starting circuit to be opened, stopping the starter motor.

When the main switch turned from the **ON** position to the **OFF** position, the fuel cut-off solenoid moves the fuel injection pump control rack to the **"No Fuel Injection"** position and stop the engine.

[1] STARTER

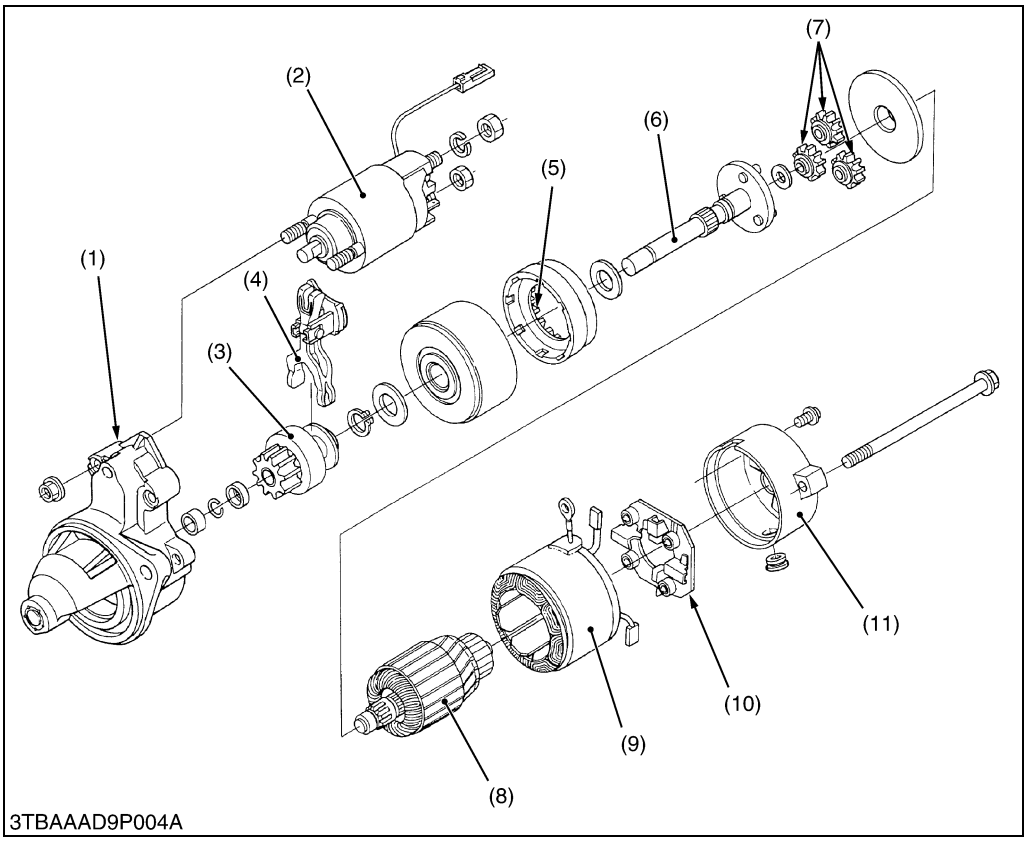

(1) Housing
(2) Magnetic Switch
(3) Overrunning Clutch
(4) Drive Lever
(5) Internal Gear
(6) Gear Shaft
(7) Planetary Gear
(8) Armature Shaft
(9) Yoke
(10) Brush Holder
(11) Rear End Frame

W10128760

The starter is a reduction type.

The reduction system is used planetary gears, and the speed of gear shaft (6) is reduced to approximately one fifth of the armature shaft (8).

[2] GLOW PLUG

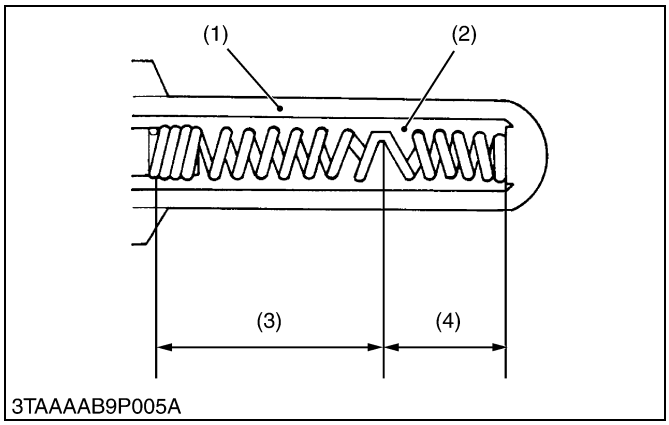

3TAAAAB9P005A

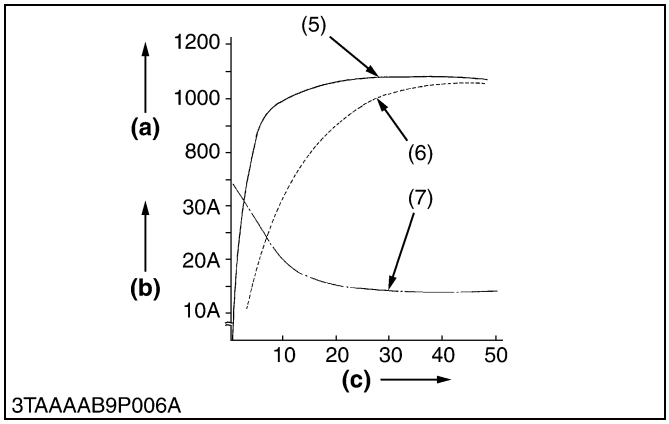

3TAAAAB9P006A

This plug is a two-material type QGS (Quick Glow System) for quick temperature rise, and has self-controlling function as well as excellent durability.

The heater (4) connected in series to the heater (3), which also functions as the resistor, is incorporated in the sheath tube (1) of the super glow plug.

The resistance of this heater (3) cum resistor is small when the temperature is low, while the resistance becomes large when the temperature rises.

Therefore, because sufficient current is flown to the heater (4) during the initial period of energization, the temperature rises quickly and the resistance grows with the rise in the temperature of the resistor, the flowing current is reduces to prevent the heater (4) from being heated.

The ignition point is in the area of 2 to 3 mm (0.079 to 0.118 in.) from the tip of the plug in order to reduce its projection into the combustion chamber.

(1) Sheath Tube
(2) Insulation Powder
(3) Heater also functioning as a Resistor
(4) Heater
(5) Super Glow Plug
(6) Conventional Quick-heating type Glow Plug
(7) Glow Plug Current

(a) Glow Plug Temperature (°C)
(b) Current (A)
(c) Time (Sec.)

W10132560

[3] SAFETY SWITCH

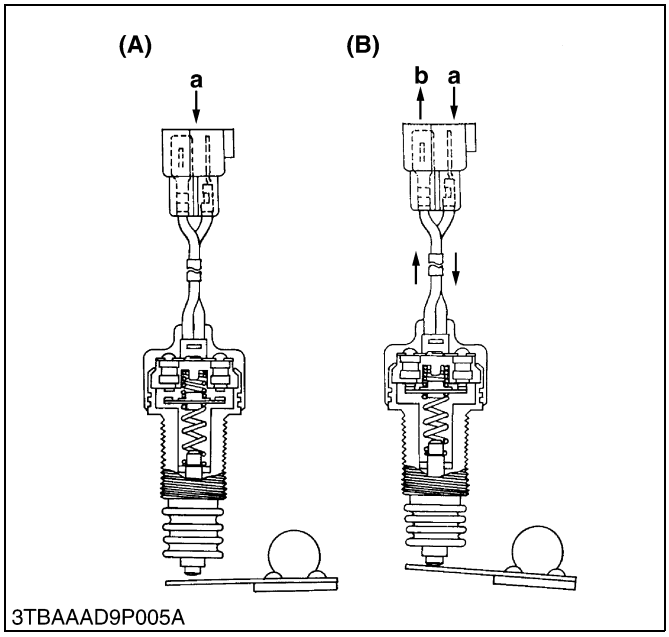

3TBAAAD9P005A

■ Clutch Pedal, PTO Gear Shift Lever and HST Pedal

The safety switch prevents current from flowing to the starter when the safety switches are not depressed. This is to ensure safe starting.

The safety switches are located three (Clutch pedal, PTO gear shift lever, HST pedal and main gear shift lever) different position.

(A) Released (when shifted)
(B) Depressed (when neutral)

a : From Main Switch
b : To Starter

W10132920

[4] ENGINE STOP SOLENOID

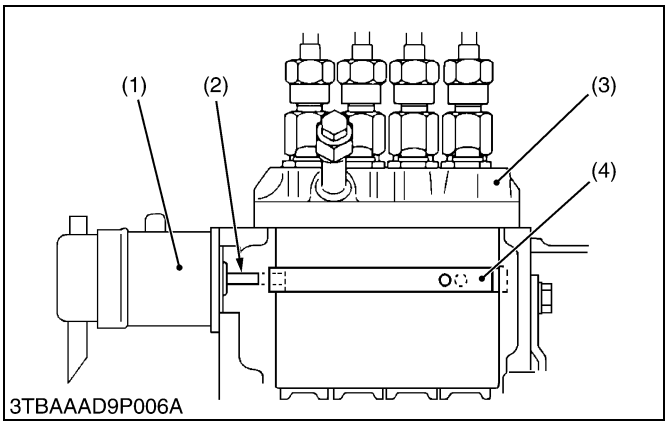

Flowing of the battery current into the fuel cut off solenoid, the plunger (2) move to left side so that the movement of control rack (4) becomes free. When the battery current stops, the plunger (2) is returned to the original position by the spring to keep the control rack (4) in **"No fuel injection"** position.

(1) Engine Stop Solenoid
(2) Plunger
(3) Injection Pump
(4) Control Rack

W10133930

3. CHARGING SYSTEM

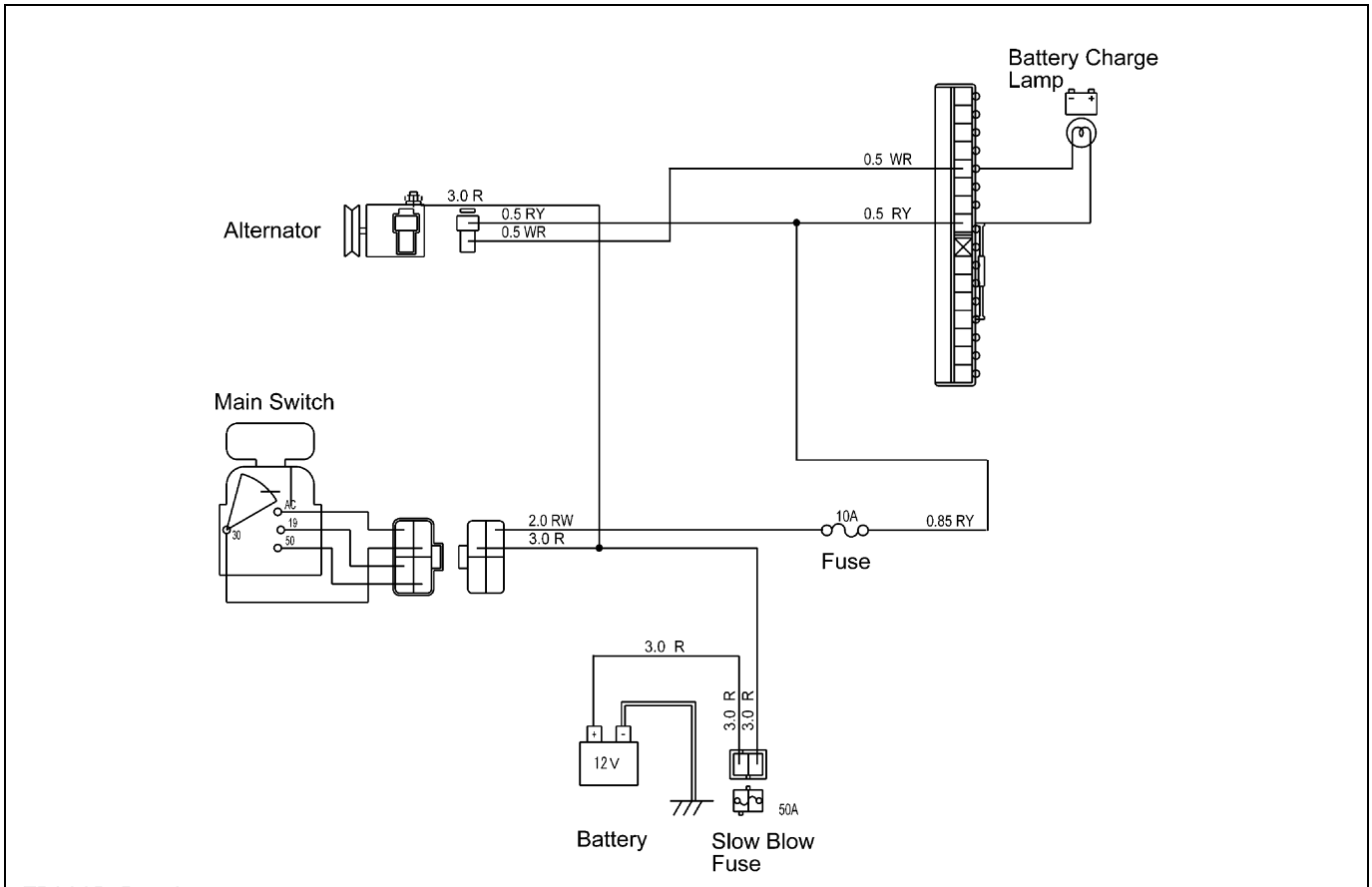

3TBAAAD9P007A

The charging system supplies electric power for various electrical devices and also charges the battery while the engine runs.

[1] ALTERNATOR

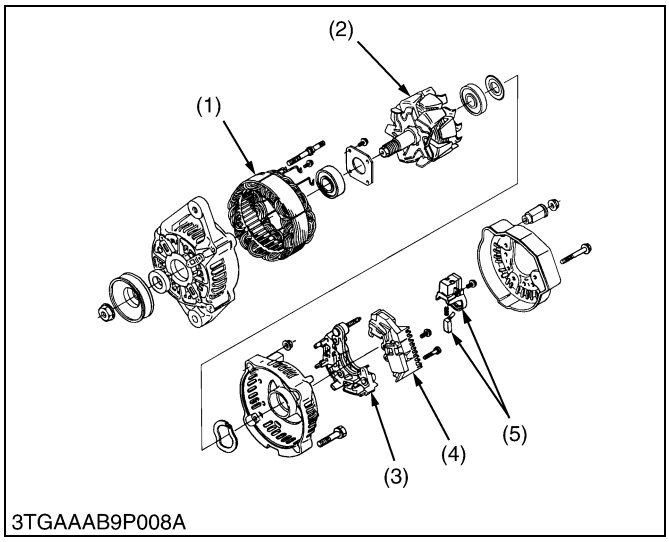

3TGAAAB9P008A

A compact alternator with an IC regulator is used, having the following characteristics :

- Approximately 26 % lighter and 17 % smaller than a standard alternator.
- Cooling performance and safety have been improved by combining the cooling fan with the rotor and incorporating the fan / rotor unit inside the alternator.
- IC regulator is fitted inside the alternator.
- The rectifier, IC regulator and similar components are easy to remove, making it easier to service the alternator.

(1) Stator
(2) Rotor
(3) Rectifier
(4) IC Regulator
(5) Brush Holder

W10136070

[2] IC REGULATOR

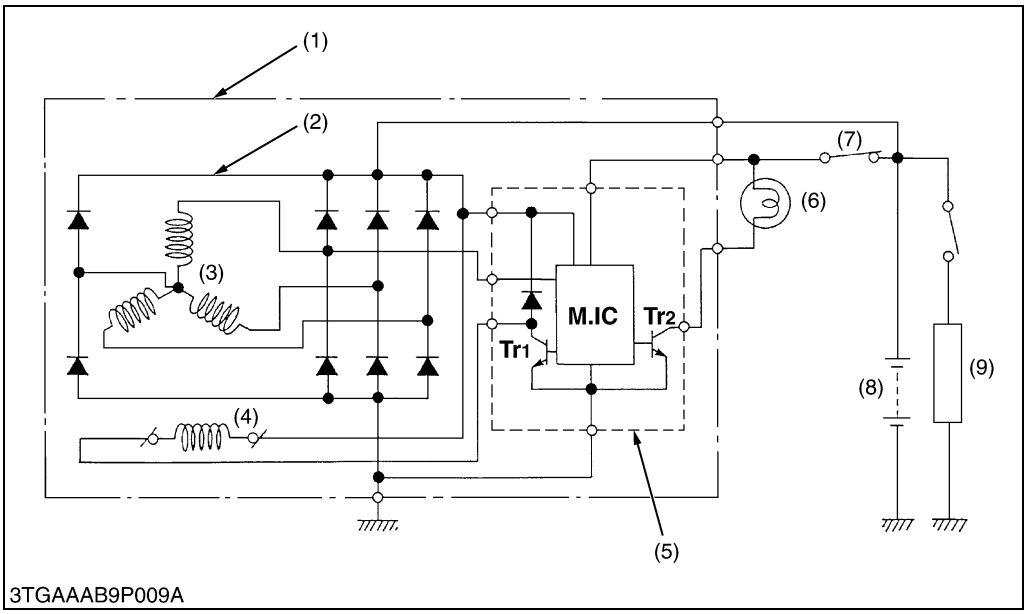

(1) Alternator
(2) Rectifier
(3) Stator Coil
(4) Rotor Coil
(5) IC Regulator
(6) Charge Lamp
(7) Main Switch
(8) Battery
(9) Load

W10137470

An IC regulator uses solid state transistors, chips or other semiconductor elements instead of the relays in a conventional regulator. Stable characteristics are achieved by cutting off the field current.

IC regulators have the following characteristics :

- The control voltage does not change over time, so the need for readjustment is eliminated. Since there are no moving parts, IC regulators are extremely durable and resistant to vibration.
- The overheat compensation characteristics ensure that the control voltage is reduced as the temperature rises, so the battery is charged at just the right level.

The internal circuitry of the IC regulator is shown in the diagram. It consists of a hybrid IC incorporating a monolithic IC. (The internal circuitry of the monolithic IC is extremely complex, so it is shown as simply **"M.IC circuit"**.)

Tr1 acts as the contacts controlling the field current, and **Tr2** acts as the charge lamp relay controlling the flashing of the charge lamp.

The **M.IC** circuit controls **Tr1** and **Tr2**, and monitors the alternator output voltage, and detects any drop in **L** terminal voltage or breaks in the rotor coil.

4. LIGHTING SYSTEM

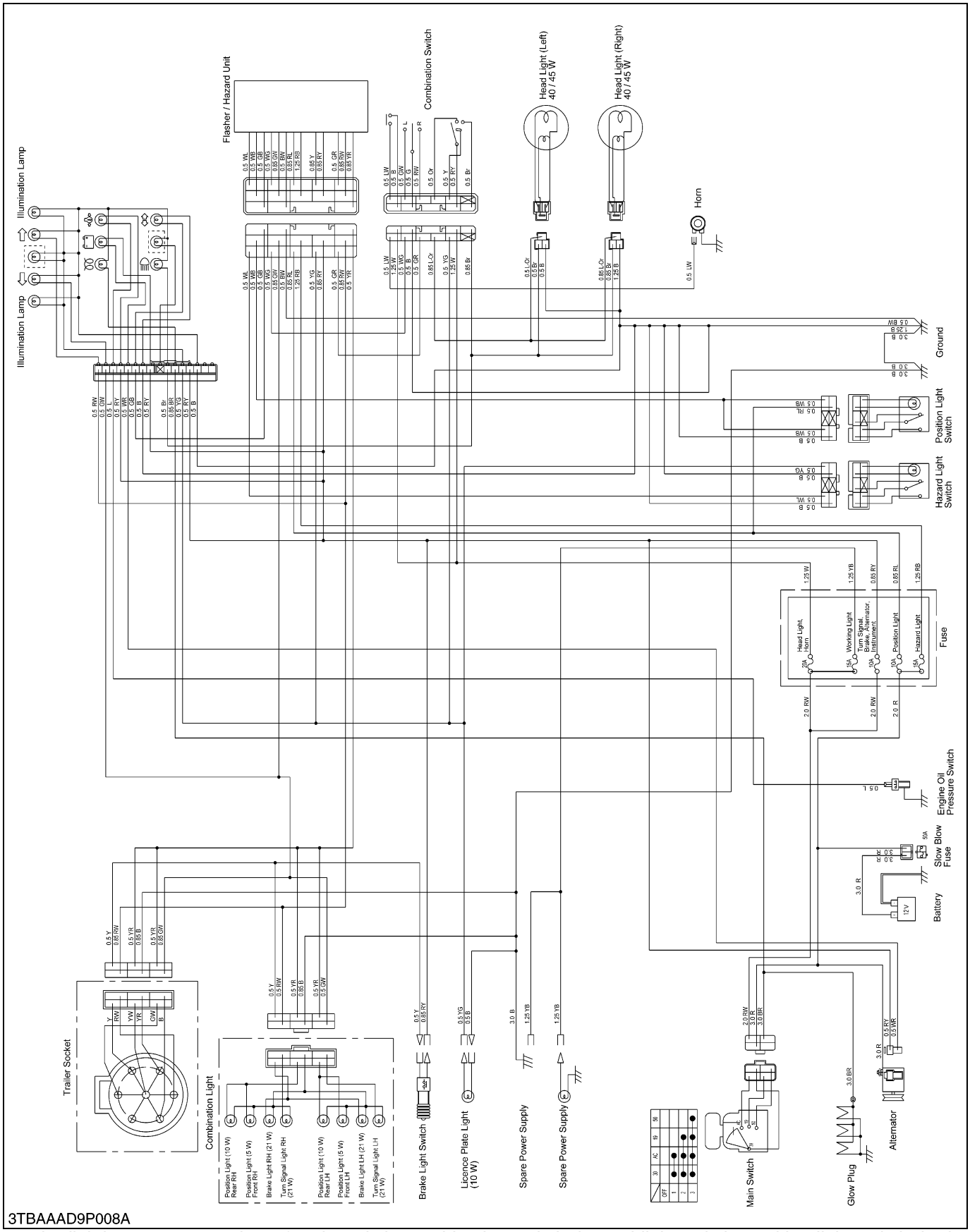

The lighting system consists of main switch, combination switch, hazard light switch, position light switch, brake light switch, head lights, combination lights, brake lights, etc..

[1] HEAD LIGHT

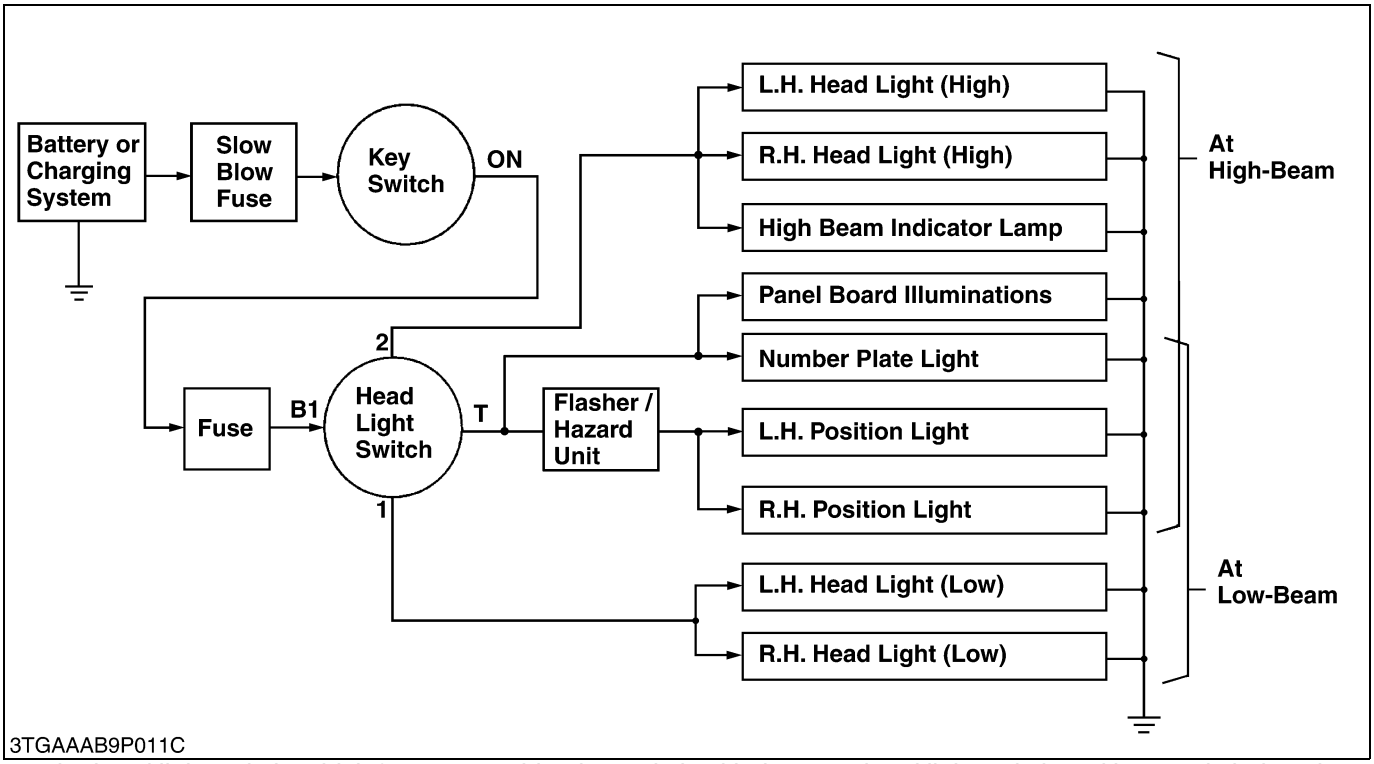

The head light switch, which forms a combination switch with the turn signal light switch and horn switch, has three positions; **OFF**, **LOW-BEAM** and **HIGH-BEAM**.

Current passes through the light circuit as shown in the figure above.

[2] TURN SIGNAL LIGHT

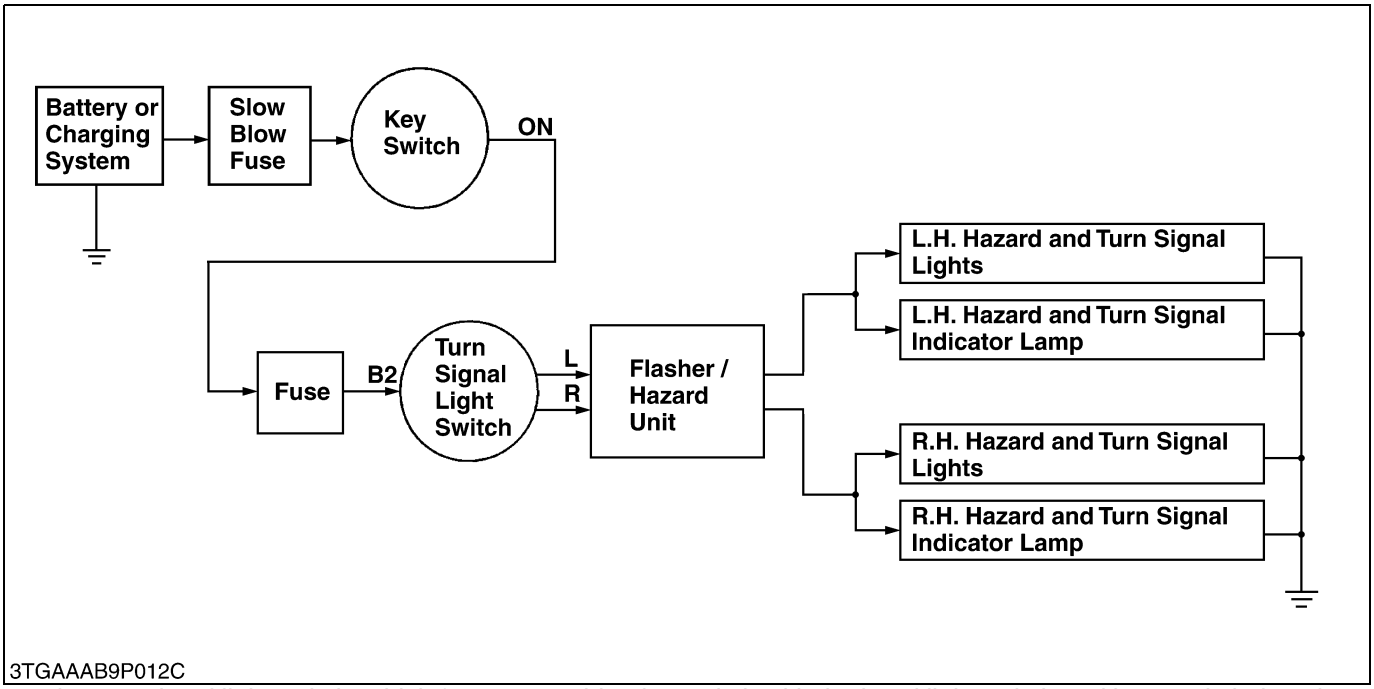

The turn signal light switch, which forms a combination switch with the head light switch and horn switch, has three position; **OFF**, **L** and **R**. When using turn signal light switch, blinks only one side light and other one stays off.

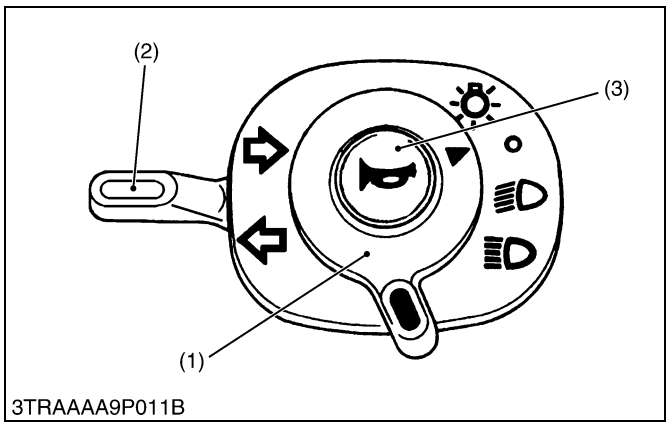

■ **Combination Switch**

Combination switch consist of head light switch, turn signal light switch and horn switch.

- **Head Light Switch**

	B1	T	1	2
OFF	●			
Low	●	●	●	
High	●	●		●

- **Turn Signal Light Switch**

	B2	R	L
R	●	●	
OFF	●		
L	●		●

- **Horn Switch**

	B1	H
OFF	●	
ON	●	●

(1) Head Light Switch
(2) Turn Signal Light Switch
(3) Horn Switch

W10140690

[3] HAZARD LIGHT

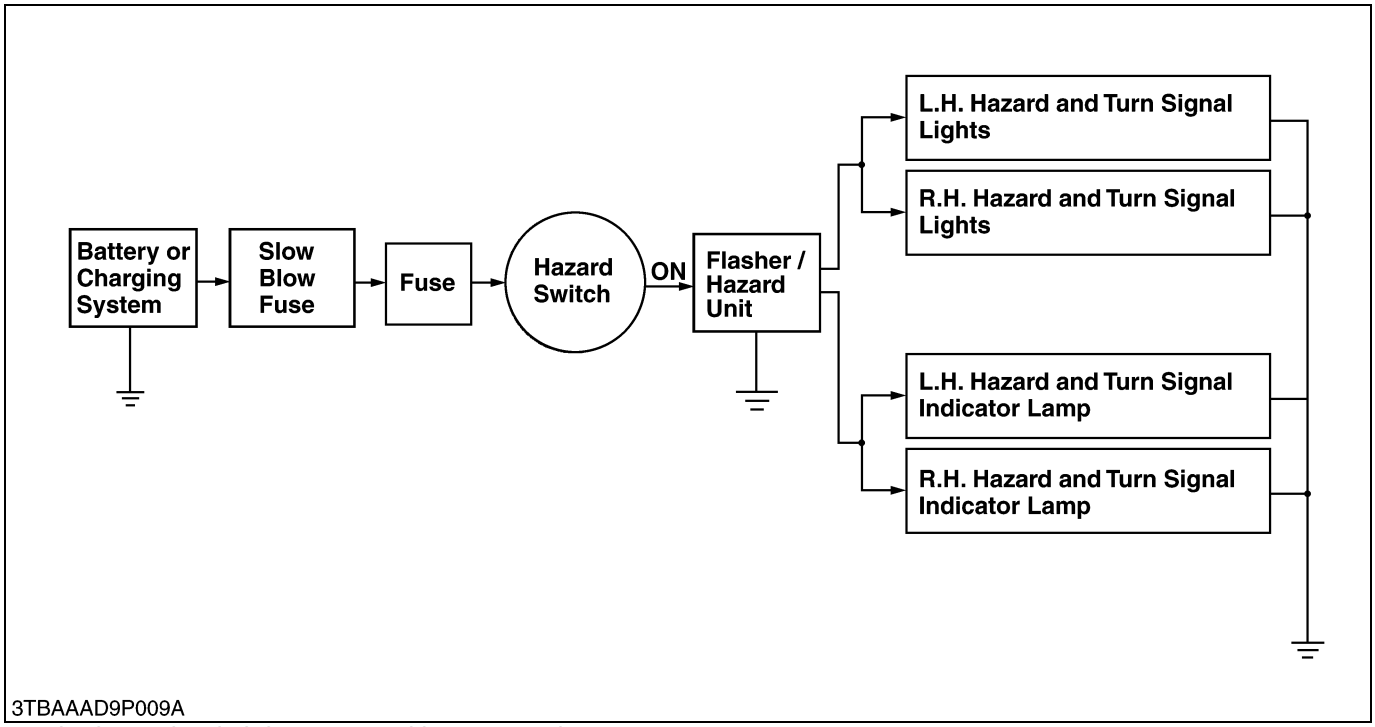

The hazard switch has two position; **ON** and **OFF**.

When the hazard switch is turned to **ON**, the hazard lights and indicator lamps are blinked as shown in the figure above.

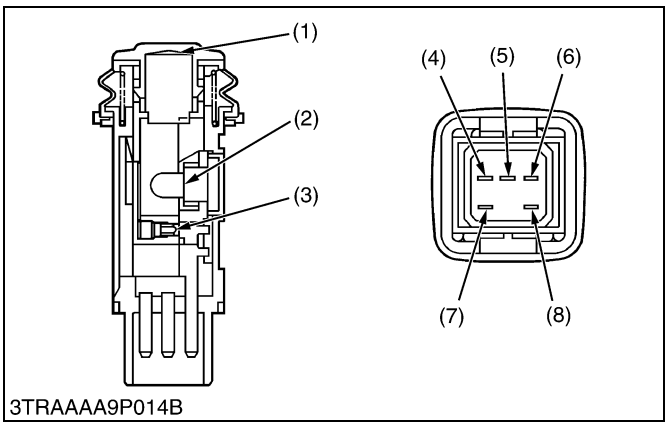

■ Hazard Switch

This is a pushing type switch to turn on the hazard lights. The lamp (2) in the switch is lighted up by the current from outside of the switch. The circuit in the switch is shown below.

Terminal	a	(b)	c	Lamp	
				d	e
OFF		●	●	●	●
ON	●		●	●	●

(1) Lens
(2) Lamp
(3) Contact Portion
(4) Terminal **a**
(5) Terminal **b**
(6) Terminal **d**
(7) Terminal **c**
(8) Terminal **e**

W10150170

[4] POSITION (PARKING) LIGHT

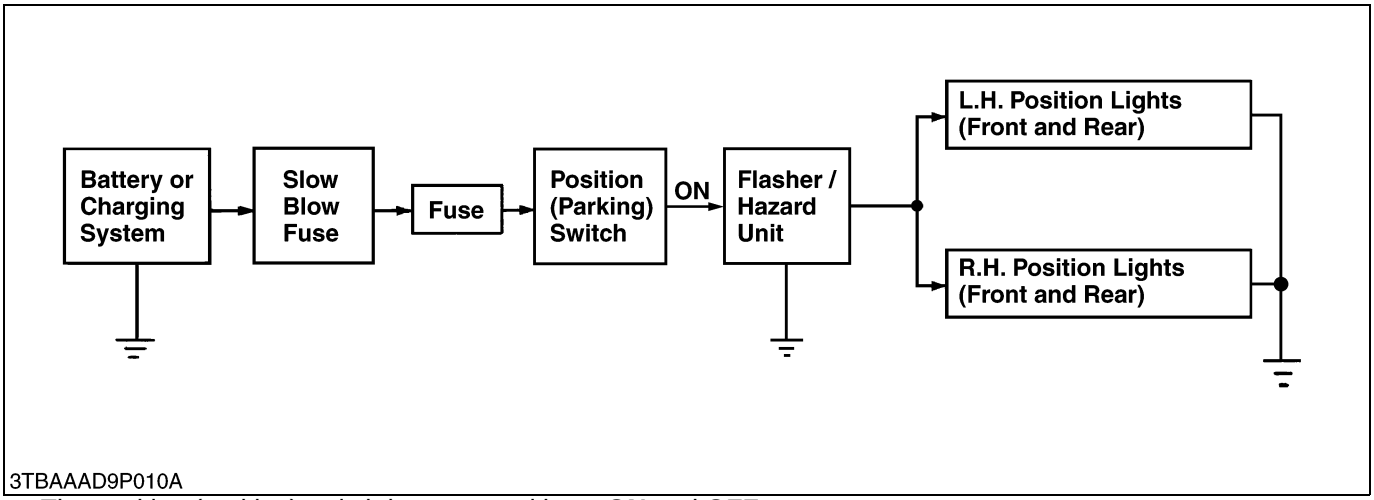

The position (parking) switch has two positions; **ON** and **OFF**.
Current passes through the light circuit as shown in the figure above.

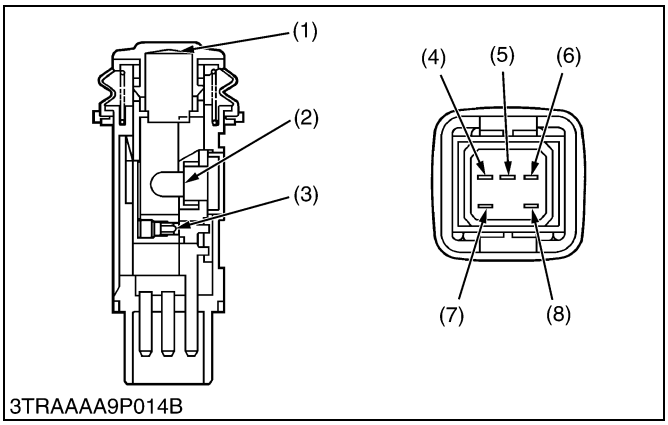

■ Position (Parking) Switch

This is a pushing type switch to turn on the position lamps. The lamp (2) in the switch is lighted up when the switch is **"ON"**. The circuit in the switch is shown below.

Terminal	a	(b)	c	Lamp	
				d	e
OFF		●	●	●	●
ON	●		●	●	●

(1) Lens
(2) Lamp
(3) Contact Portion
(4) Terminal **a**
(5) Terminal **b**
(6) Terminal **d**
(7) Terminal **c**
(8) Terminal **e**

W10155640

[5] BRAKE LIGHT

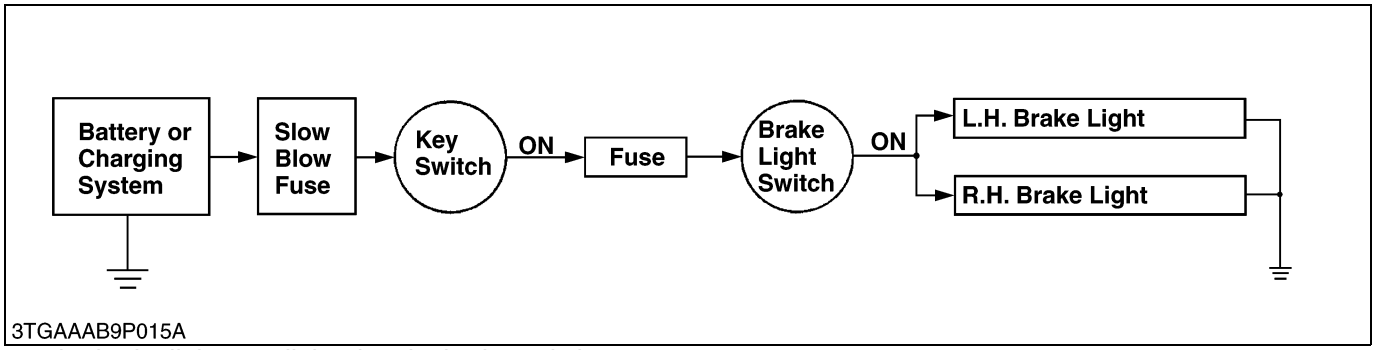

3TGAAAB9P015A

The brake lights are lighted up by brake switch.
Current passes the circuit as shown in the figure above.

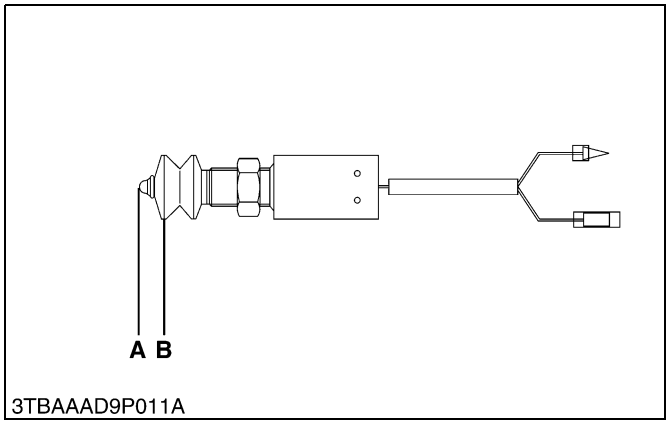

3TBAAAD9P011A

■ **Brake Switch**

Brake switch is turned on by pushing a brake pedal and turned off by releasing it.

A : ON **B : OFF**

W10158500

[6] EASY CHECKER

To check the conditions of tractor easily before and during operation, easy checker combination of lamps on the easy checker board is provided.

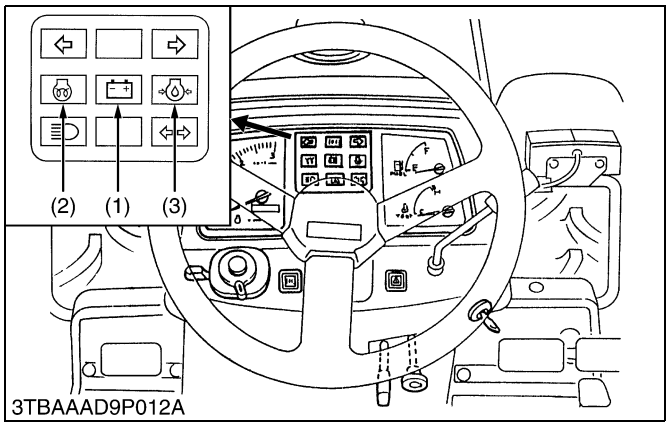

3TBAAAD9P012A

■ **Indication Items**

(1) Charge Lamp

When the charging system is not functioning properly, this lamp illuminates.

(2) Pre-heat Indicator Lamp

When the key switch is in the **"Pre-heat"** position, the pre-heat indicator lamp illuminates.

(3) Oil Pressure Lamp

When the engine oil pressure is low, this lamp illuminates.

W10159350

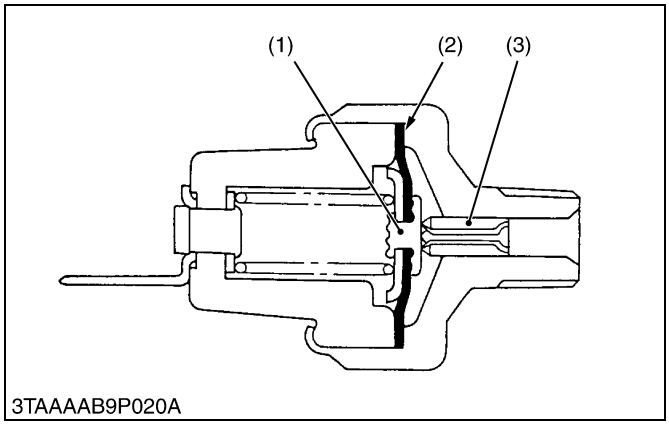

3TAAAAB9P020A

■ **Oil Pressure Switch**

While oil pressure is high and the force applied to the diaphragm (2) is larger than the spring tension, the terminal contact (1) is open separated from the body contact (3). If the pressure drops below approx. 49 kPa (0.5 kgf/cm^2, 7.1 psi), the contact closes.

(1) Terminal Contact (3) Body Contact
(2) Diaphragm

W10160530

[7] TRAILER SOCKET

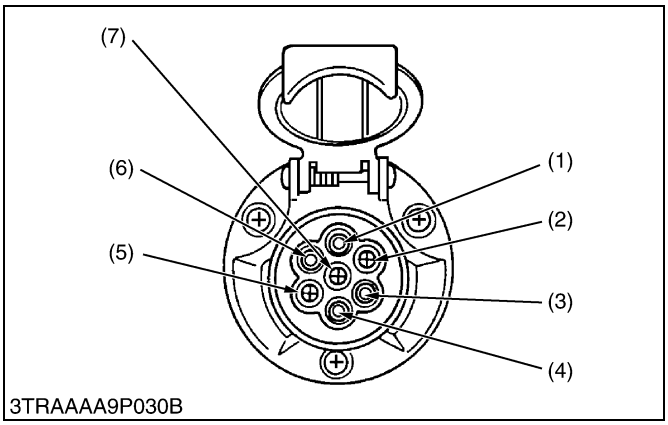

The trailer socket is provided to take out the electrical power from tractor to trailer or implement.

The function of each terminal is shown below.

Terminal	Function	Color of wire harness
(1)	Turn signal (**LH**)	Green / White
(2)	–	–
(3)	Ground	Black
(4)	Turn signal (**RH**)	Red / White
(5)	Tail (**RH**)	Yellow / Red
(6)	Brake	Yellow
(7)	Tail (**LH**)	Yellow / White

(1) Terminal **1**
(2) Terminal **2**
(3) Terminal **3**
(4) Terminal **4**
(5) Terminal **5**
(6) Terminal **6**
(7) Terminal **7**

W10161720

5. GAUGES

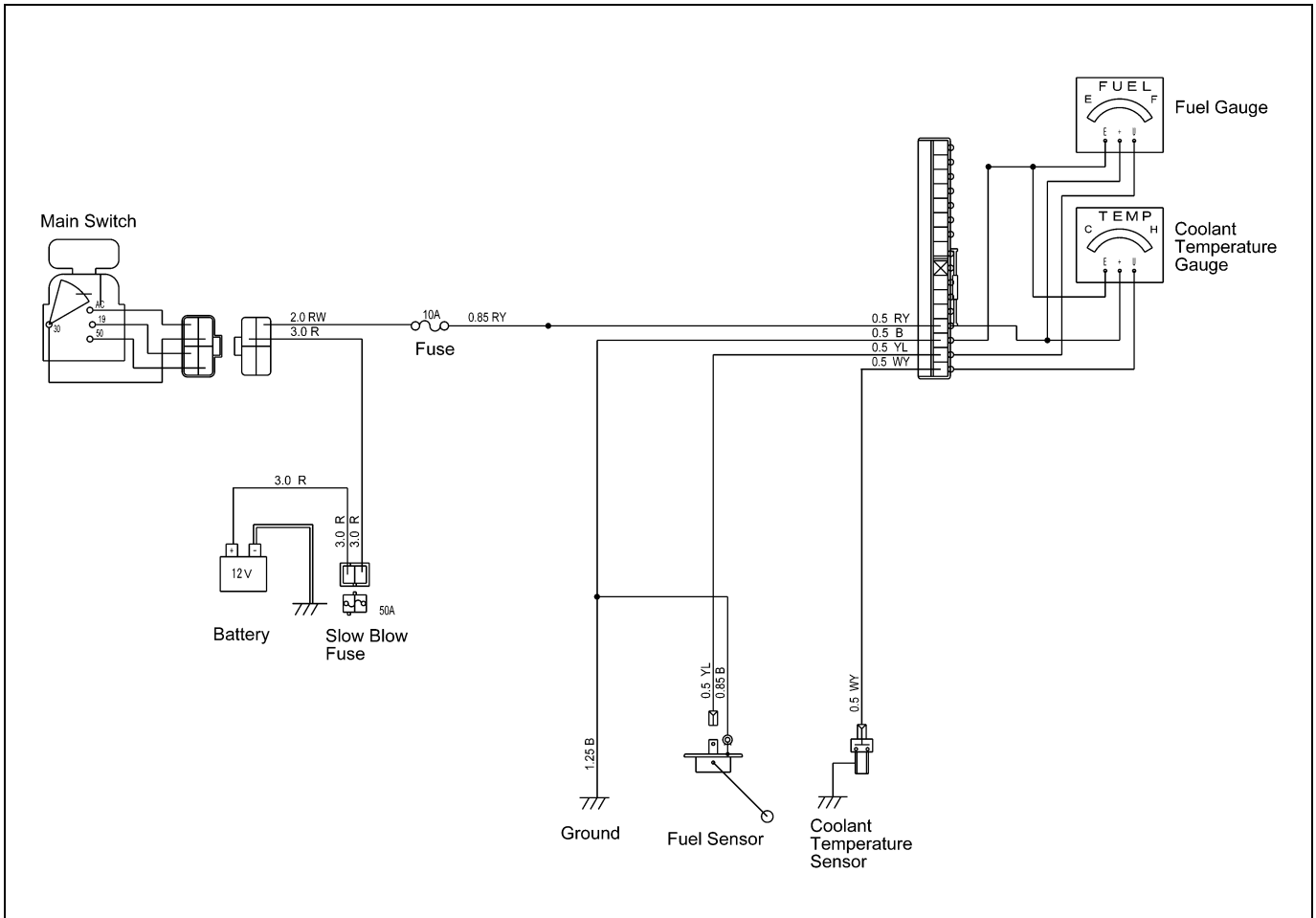

3TBAAAD9P013A

The fuel quantity and coolant temperature are indicated by the ammeters. The ammeters indicate each amperage flowing through the fuel level sensor for the fuel quantity detection and through the coolant temperature sensor for the coolant temperature detection.

[1] FUEL QUANTITY

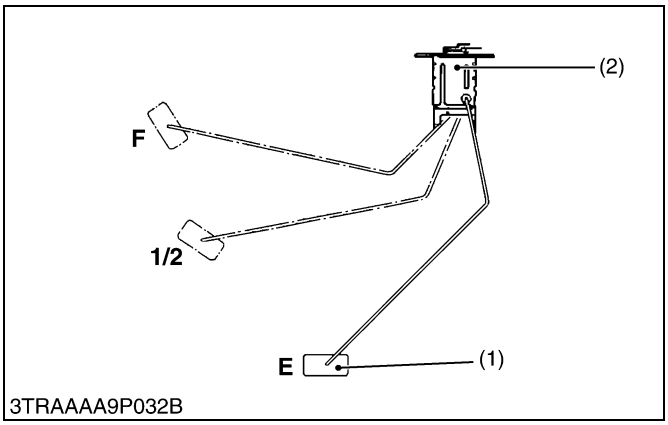

■ Fuel Level Sensor

The remaining fuel quantity is detected by the fuel level sensor installed in the fuel tank and indicated on the fuel gauge. For detection, a float and a resistor are used.

As the float (1) lowers, the resistance of the variable resistor (2) varies. The relation between the amount of fuel and the resistance is as follows.

F	1/2	E
1 to 5 Ω	27.5 to 37.5 Ω	103 to 117 Ω

(1) Float (2) Variable Resistor

W10165250

[2] COOLANT TEMPERATURE

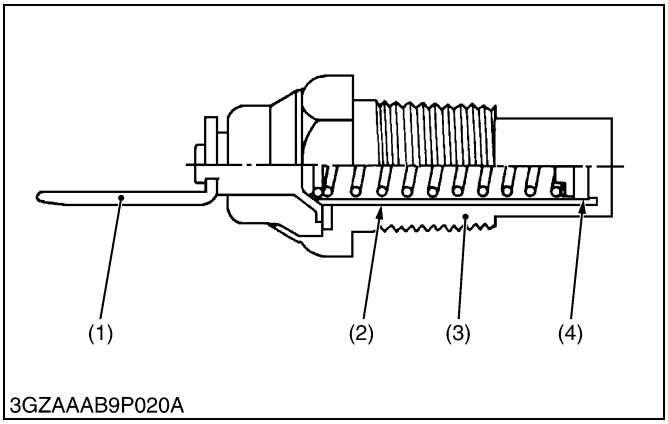

■ Coolant Temperature Sensor

The coolant temperature sensor is installed to the cylinder head of engine, and its tip is in touch with the coolant. It contains a thermistor (4) whose electrical resistance decreases as the temperature increases.

Current varies with changes in the coolant temperature, and the increases or decreases in the current move the pointer of gauge.

Characteristics of Thermistor	
Temperature	Resistance
50 °C (122 °F)	148.8 Ω
80 °C (176 °F)	50.3 Ω
120 °C (248 °F)	16.0 Ω
170 °C (338 °F)	5.6 Ω

(1) Terminal
(2) Insulator
(3) Body
(4) Thermistor

W10167200

SERVICING

CONTENTS

1. TROUBLESHOOTING 9-S1
2. SERVICING SPECIFICATIONS 9-S4
3. TIGHTENING TORQUES 9-S5
4. CHECKING, DISASSEMBLING AND SERVICING 9-S6
   [1] BATTERY 9-S6
      (1) Checking 9-S6
   [2] STARTING SYSTEM 9-S8
      (1) Checking 9-S8
      (2) Disassembling and Assembling 9-S14
      (3) Servicing 9-S15
   [3] CHARGING SYSTEM 9-S17
      (1) Checking 9-S17
      (2) Disassembling and Assembling 9-S18
      (3) Servicing 9-S20
   [4] LIGHTING SYSTEM 9-S22
      (1) Checking 9-S22
   [5] GAUGES 9-S29
      (1) Checking 9-S29

1. TROUBLESHOOTING

Symptom	Probable Cause	Solution	Reference Page
All Electrical Equipment Do Not Operate	• Battery discharged or defective • Battery positive cable disconnected or improperly connected • Battery negative cable disconnected or improperly connected • Slow blow fuse blown	Recharge or Replace Repair or Replace Repair or Replace Replace	G-19 – – –
Fuse Blown Frequently	• Short-circuited	Repair or Replace	–

W10143220

BATTERY

Battery Discharges Too Quickly	• Battery defective • Alternator defective • IC Regulator defective • Wiring harness disconnected or improperly connected (between battery positive terminal and regulator **B** terminal) • Cooling fan belt slipping	Replace Repair or Replace Replace Repair or Replace Adjust tension	– 9-S18 9-S18 – G-20

W10137180

STARTING SYSTEM

Starter Motor Does Not Operate	• Battery discharged or defective • Slow blow fuse blown • Safety switch improperly adjusted or defective • Wiring harness disconnected or improperly connected (between main switch **50** terminal and safety switches, between safety switches and starter motor, between battery positive terminal and starter motor) • Starter motor defective • Main switch defective • Starter relay defective	Recharge or Replace Replace Repair or Replace Repair or Replace Repair or Replace Replace Replace	G-19 – 9-S12 – 9-S14 9-S8 9-S10
Pre-heat Indicator Lamp Does Not Light When Main Switch Is in Pre-heat Position	• Battery discharged or defective • Slow blow fuse blown • Wiring harness disconnected or improperly connected (between main switch **19** terminal and pre-heat indicator, between pre-heat indicator and glow plugs) • Main switch defective • Pre-heat indicator defective	Recharge or Replace Replace Repair or Replace Replace Replace	G-19 – – 9-S8 –
Engine Does Not Stop When Main Switch is Turned OFF	• Fuse blown (10 A) • Wiring harness disconnected or improperly connected (between main switch **AC** terminal and engine stop solenoid) • Engine stop solenoid defective	Replace Repair or Replace Replace	G-30 – 9-S12
Engine Does Not Start	• Engine stop solenoid defective	Replace	9-S12

W10137180

CHARGING SYSTEM

Symptom	Probable Cause	Solution	Reference Page
Charge Lamp Does Not Light when Main Switch is Turned ON	• Fuse blown (10 A) • Wiring harness disconnected or improperly connected (between main switch **AC** terminal and panel board, between panel board and alternator) • Alternator defective	Replace Repair or Replace Repair or Replace	G-30 – 9-S18
Charge Lamp Does Not Go Off When Engine is Running	• Wiring harness disconnected or improperly connected (between main switch **30** terminal and alternator, between panel board and alternator) • Alternator defective	Repair or Replace Repair or Replace	– 9-S18

W10135800

LIGHTING SYSTEM

Head Light Does Not Light	• Fuse blown (20 A) • Bulb blown • Wiring harness disconnected or improperly connected (between main switch **AC** terminal and combination switch **B1** terminal, between combination switch **1** terminal and head light, between combination switch **2** terminal and head light)	Replace Replace Repair or Replace	G-30 – –
License Plate Light Does Not Light	• Fuse blown (20 A) • Bulb blown • Wiring harness disconnected or improperly connected (between main switch **AC** terminal and combination switch **B1** terminal, between combination switch **T** terminal and tail light)	Replace Replace Repair or Replace	G-30 – –
Illumination Light Does Not Light	• Fuse blown (10 A) • Bulb blown • Wiring harness disconnected or improperly connected (between main switch **AC** terminal and combination switch **B1** terminal, between combination switch **T** terminal and panel board)	Replace Replace Repair or Replace	G-30 – –
Hazard Light Does Not Light	• Fuse blown (15 A) • Bulb blown • Wiring harness disconnected or improperly connected • Flasher / hazard unit defective • Hazard light switch defective	Replace Replace Repair or Replace Replace Replace	G-30 – – 9-S26 9-S24
Hazard Indicator Lamp Does Not Light	• Bulb blown • Wiring harness disconnected or improperly connected	Replace Repair or Replace	– –
Hazard Light Does Not Flicker	• Flasher / hazard unit defective	Replace	9-S26
Position (Parking) Light Does Not Light	• Fuse blown (10 A) • Bulb blown • Position light switch defective • Wiring harness disconnected (between position light switch and position light)	Replace Replace Repair or Replace Repair or Replace	G-30 – 9-S25 –

W10137180

LIGHTING SYSTEM (Continued)

Symptom	Probable Cause	Solution	Reference Page
Turn Signal Light Does Not Light	• Fuse blown (10 A) • Bulb blown • Wiring harness disconnected or improperly connected • Flasher / hazard unit defective • Combination switch defective	Replace Replace Repair or Replace Replace Replace	G-30 – – 9-S26 9-S22
Turn Signal Light Indicator Lamp Does Not Light	• Bulb blown • Wiring harness disconnected or improperly connected (between combination switch **R** or **L** terminal and panel board)	Replace Repair or Replace	– –
Turn Signal Light Does Not Flicker	• Flasher / hazard unit defective • Combination switch defective	Replace Replace	9-S26 9-S22
Horn Does Not Sound When Horn Button is Pushes	• Combination switch defective • Horn defective • Wiring harness disconnected or improperly connected (between combination switch terminal and horn)	Replace Replace Repair or Replace	9-S22 – –
Engine Oil Pressure Lamp Lights Up When Engine Is Running	• Engine oil pressure too low • Engine oil insufficient • Engine oil pressure switch defective • Short circuit between engine oil pressure switch lead and chassis • Circuit in panel board defective	Repair engine Replenish Replace Repair Replace	– G-8 9-S27 – –
Engine Oil Pressure Lamp Does Not Light When Main Switch Is Turned ON and Engine Is Not Running	• Bulb blown • Engine oil pressure switch defective • Wiring harness disconnected or improperly connected (between panel board and engine oil pressure switch) • Circuit in panel board defective	Replace Replace Repair or Replace Replace	– 9-S27 – –

W10135800

GAUGES

Fuel Gauge Does Not Function	• Fuel gauge defective • Fuel level sensor defective • Wiring harness disconnected or improperly connected (between panel board and fuel level sensor) • Circuit in panel board defective	Replace Replace Repair or Replace Replace	9-S30 9-S29 – –
Coolant Temperature Gauge Does Not Function	• Coolant temperature gauge defective • Coolant temperature sensor defective • Wiring harness disconnected or improperly connected (between panel board and coolant temperature sensor) • Circuit in panel board defective	Replace Replace Repair or Replace Replace	9-S30 9-S29 – –

W10137180

2. SERVICING SPECIFICATIONS

Item		Factory Specification	Allowable Limit
Battery	Voltage	More than 12 V	–
	Potential Difference	Less than 0.1 V	–
Glow Plug	Resistance	Approx. 0.9 Ω	–
Starter			
Commutator	O.D.	28.0 mm 1.102 in.	27.0 mm 1.063 in.
	Difference of O.D.'s	Less than 0.02 mm 0.0008 in.	0.05 mm 0.0020 in.
Mica	Under Cut	0.60 mm 0.0236 in.	0.20 mm 0.0079 in.
Brush	Length	14.0 mm 0.551 in.	9.0 mm 0.354 in.
Brush Holder and Holder Support	Resistance	Infinity	–
Alternator	No-load voltage	More than 14 V	–
Stator	Resistance	Less than 1.0 Ω	–
Rotor	Resistance	2.9 Ω	–
Slip Ring	O.D.	14.4 mm 0.567 in.	12.8 mm 0.504 in.
Brush	Length	10.5 mm 0.413 in.	8.4 mm 0.331 in.

W10138740

3. TIGHTENING TORQUES

Tightening torques of screws, bolts and nuts on the table below are especially specified.
(For general use screws, bolts and nuts : See page G-9.)

Item	N·m	kgf·m	ft-lbs
Starter			
M terminal nut	8.8 to 11.8	0.9 to 1.2	6.5 to 8.7
C terminal nut	7.9 to 11.8	0.8 to 1.2	5.8 to 8.7
Magnetic switch mounting nut	5.9 to 10.8	0.6 to 1.1	4.4 to 7.9
Through bolt	4.42 to 7.35	0.45 to 0.75	3.26 to 5.42
Alternator			
Pulley nut	58.3 to 78.9	5.95 to 8.05	43.0 to 58.2

W10127360

4. CHECKING, DISASSEMBLING AND SERVICING

CAUTION

- **To avoid accidental short circuit, be sure to attach the positive cable to the positive terminal before the negative cable is attached to the negative terminal.**
- **Never remove the battery cap while the engine is running.**
- **Keep electrolyte away from eyes, hands and clothes. If you are spattered with it, wash it away completely with water immediately.**
- **Keep open sparks and flames away from the battery at all times. Hydrogen gas mixed with oxygen becomes very explosive.**

■ **IMPORTANT**

- **If the machine is to be operated for a short time without battery (using a slave battery for starting), use additional current (lights) while engine is running and insulate terminal of battery. If this advice is disregarded, damage to alternator and regulator may result.**

[1] BATTERY

(1) Checking

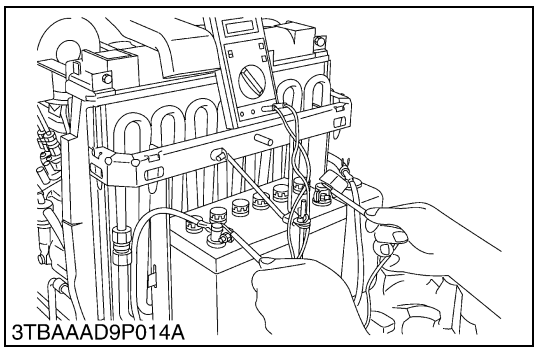
3TBAAAD9P014A

Battery Voltage

1. Stop the engine and turn the main switch off.
2. Connect the COM (–) lead of the voltmeter to the battery's negative terminal post and the (+) lead to the positive terminal post, and measure the battery voltage.
3. If the battery voltage is less than the factory specification, check the battery specific gravity and recharge the battery.

Battery voltage	Factory spec.	More than 12 V

W10125620

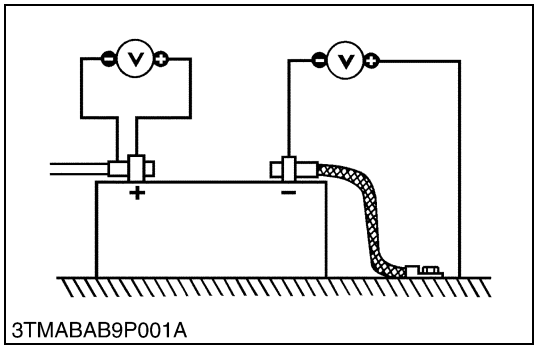

3TMABAB9P001A

Battery Terminal Connection

1. Turn the main switch on, and turn on the head light.
2. Measure the voltage with a voltmeter across the battery's positive terminal post and the cable terminal, and the voltage across the battery's negative terminal post and the chassis.
3. If the measurement exceeds the factory specification, clean the battery terminal posts and cable clamps, and tighten them firmly.

Potential difference	Factory spec.	Less than 0.1 V

W10126630

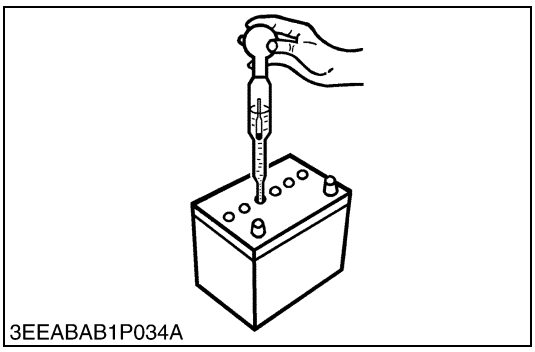
3EEABAB1P034A

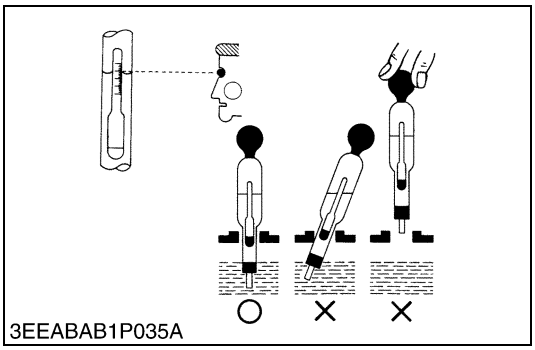
3EEABAB1P035A

Battery Specific Gravity

1. Check the specific gravity of the electrolyte in each cell with a hydrometer.
2. When the electrolyte temperature differs from that at which the hydrometer was calibrated, correct the specific gravity reading following the formula mentioned in (Reference).
3. If the specific gravity is less than 1.215 (after it is corrected for temperature), charge or replace the battery.
4. If the specific gravity differs between any two cells by more than 0.05, replace the battery.

■ **NOTE**

- **Hold the hydrometer tube vertical without removing it from the electrolyte.**
- **Do not suck too much electrolyte into the tube.**
- **Allow the float to move freely and hold the hydrometer at eye level.**
- **The hydrometer reading must be taken at the highest electrolyte level.**

(Reference)

- Specific gravity slightly varies with temperature. To be exact, the specific gravity decreases by 0.0007 with an increase of 1 °C (0.0004 with an increase of 1 °F) in temperature, and increases by 0.0007 with a decreases of 1 °C (0.0004 with a decrease of 1 °F).
  Therefore, using 20 °C (68 °F) as a reference, the specific gravity reading must be corrected by the following formula :
  - Specific gravity at 20 °C = Measured value + 0.0007 × (electrolyte temperature : 20 °C)
  - Specific gravity at 68 °F = Measured value + 0.0004 × (electrolyte temperature : 68 °C)

Specific Gravity	State of Charge
1.260 Sp. Gr.	100 % Charged
1.230 Sp. Gr.	75 % Charged
1.200 Sp. Gr.	50 % Charged
1.170 Sp. Gr.	25 % Charged
1.140 Sp. Gr.	Very Little Useful Capacity
1.110 Sp. Gr.	Discharged

At an electrolyte temperature of 20 °C (68 °F)

W10127630

[2] STARTING SYSTEM

(1) Checking

(A) Main Switch

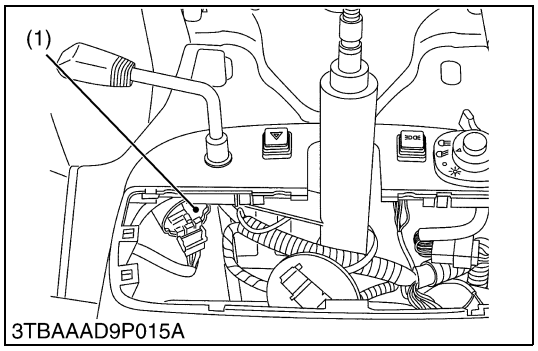

Main Switch

1. Remove the panel board.
2. Disconnect the **4P** connector and remove the main switch (1).
3. Perform the following checks.

(1) Main Switch

W10134520

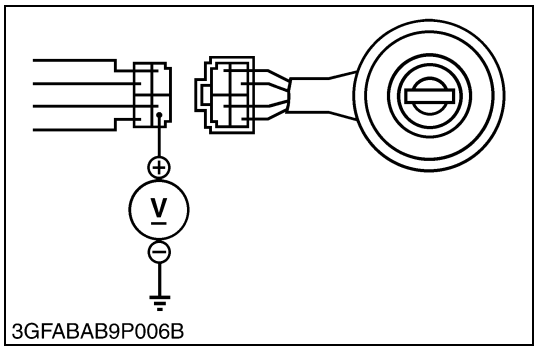

Connector Voltage

1. Measure the voltage with a voltmeter across the connector **30** terminal and chassis.
2. If the voltage differs from the battery voltage (11 to 14 V), the wiring harness is faulty.

Voltage	Connector **30** terminal – chassis	Approx. battery voltage

W10135530

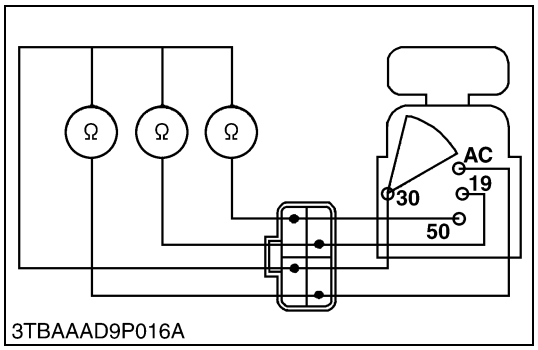

Main Switch Continuity

1) Main Switch Key at OFF Position

1. Set the main switch **OFF** position.
2. Measure the resistance with an ohmmeter across the **30** terminal and the **AC** terminal, **30** terminal and **50** terminal, **30** terminal and **19** terminal.
3. If infinity is not indicated, the contacts of the main switch are faulty.

Resistance	**30** terminal – **AC** terminal	Infinity
	30 terminal – **50** terminal	
	30 terminal – **19** terminal	

W10136580

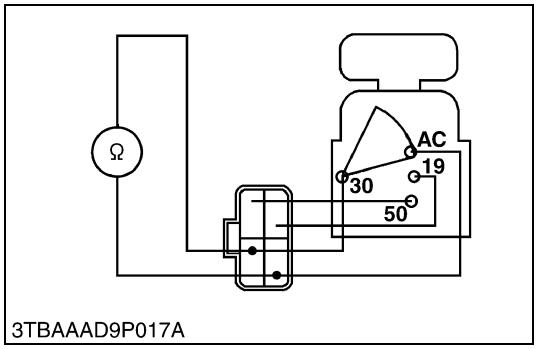

2) Main Switch Key at ON Position

1. Set the main switch **ON** position.
2. Measure the resistance with an ohmmeter across the **30** terminal and the **AC** terminal.
3. If 0 ohm is not indicated, the **30** – **AC** contact of the main switch are faulty.

Resistance	**30** terminal – **AC** terminal	0 Ω

W10138790

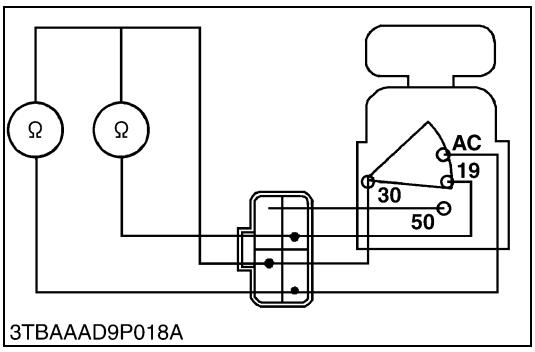

3TBAAAD9P018A

3) Main Switch Key at PREHEAT Position

1. Set and hold the main switch key at the **PREHEAT** position.
2. Measure the resistance with an ohmmeter across the **30** terminal and the **19** terminal, and measure the resistance across the **30** terminal and the **AC** terminal.
3. If 0 ohm is not indicated, these contacts of the main switch are faulty.

Resistance	**30** terminal – **19** terminal	0 Ω
	30 terminal – **AC** terminal	

W10140940

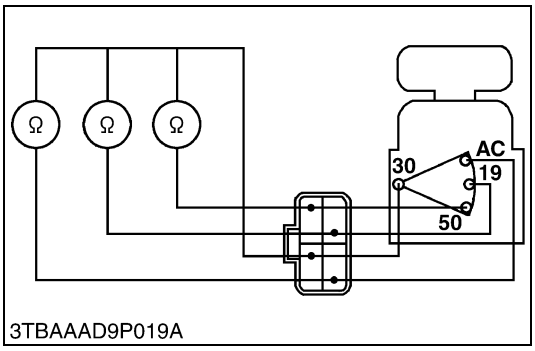

3TBAAAD9P019A

4) Main Switch Key at START Position

1. Set and hold the main switch key at the **START** position.
2. Measure the resistance with an ohmmeter across the **30** terminal and the **19** terminal, across the **30** terminal and the **50** terminal, and across the **30** terminal and the **AC** terminal.
3. If 0 ohm is not indicated, these contacts of the main switch are faulty.

Resistance	**30** terminal – **19** terminal	0 Ω
	30 terminal – **50** terminal	
	30 terminal – **AC** terminal	

W10143990

(B) Starter

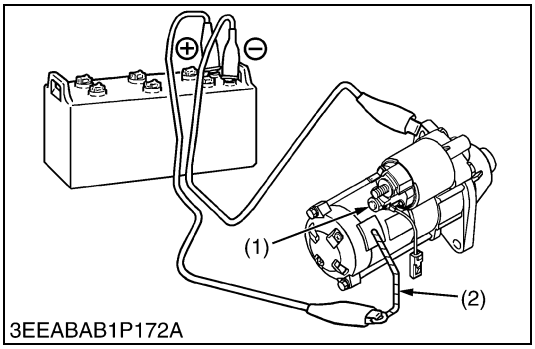

3EEABAB1P172A

Motor Test

CAUTION

- **Secure the starter to prevent if from jumping up and down while testing the motor.**

1. Disconnect the battery negative cable from the battery.
2. Disconnect the battery positive cable and the leads from the starter **M** terminal.
3. Remove the starter from the engine.
4. Disconnect the connecting lead (2) from the starter **C** terminal (1).
5. Connect a jumper lead from the connecting lead (2) to the battery positive terminal post.
6. Connect a jumper lead momentarily between the starter motor housing and the battery negative terminal post.
7. If the motor does not run, check the motor.

(1) **C** Terminal (2) Connecting Lead

W10142670

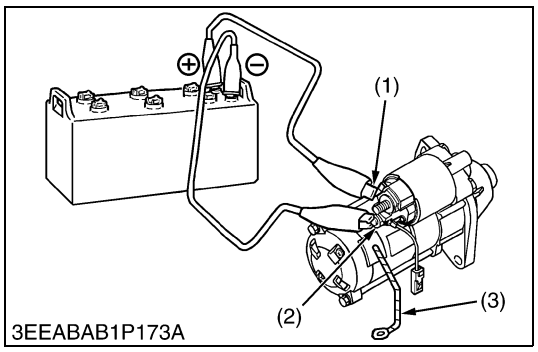

Magnet Switch Test

1. Disconnect the battery negative cable from the battery.
2. Disconnect the battery positive cable and the leads from the starter **M** terminal.
3. Remove the starter from the engine.
4. Disconnect the connecting lead (3) from the starter **C** terminal (2).
5. Connect a jumper lead from the starter **S** terminal (1) to the battery positive terminal post.
6. Connect a jumper lead momentarily between the starter **C** terminal (2) and the battery negative terminal post.
7. If the pinion gear does not pop out, check the magnetic switch.

■ **NOTE**

- **This test should be carried out for a short time, about 3 to 5 seconds.**

(1) **S** Terminal
(2) **C** Terminal
(3) Connecting Lead

W10146900

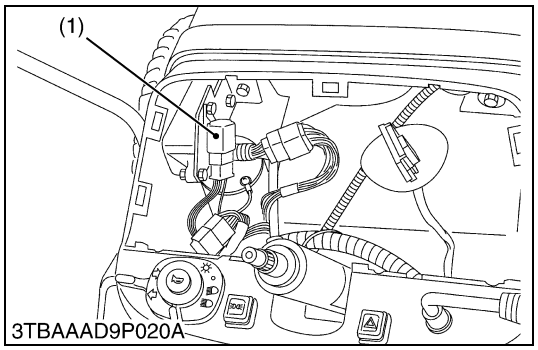

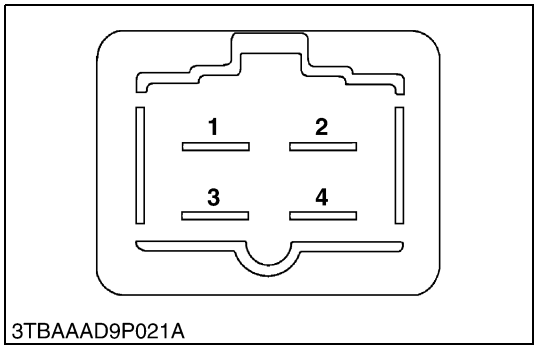

Starter Relay

1. Open the panel board and remove out the starter relay.
2. Apply battery voltage across terminal **2** and **4**, and check for continuity across terminal **1** and **3**.
3. If 0 ohm is not indicated, renew the starter relay.

Resistance	Termimal **1** – Terminal **3**	0 Ω

(1) Starter Relay

W10153790

(C) Glow Plug

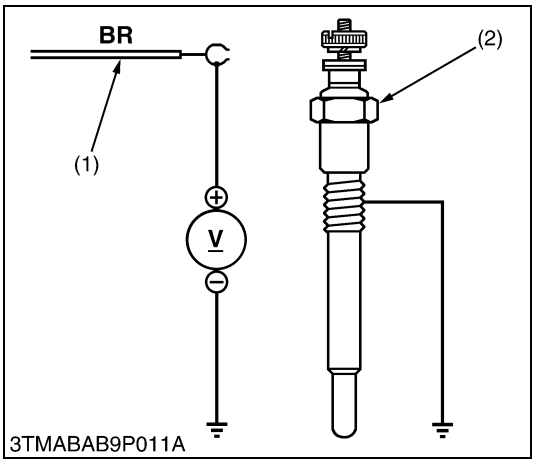

Lead Terminal Voltage

1. Disconnect the wiring lead (1) from the glow plug (2) after turning the main switch off.
2. Turn the main switch key to the **"PREHEAT"** position, and measure the voltage between the lead terminal and the chassis.
3. Turn the main switch key to the **"START"** position, and measure the voltage with a voltmeter between the lead terminal and the chassis.
4. If the voltage at either position differs from the battery voltage, the wiring harness or main switch is faulty.

Voltage (Lead terminal – Chassis)	Main switch key at **"PREHEAT"**	Approx. battery voltage
	Main switch key at **"START"**	Approx. battery voltage

(1) Wiring Lead (Positive) (2) Glow Plug

W10149130

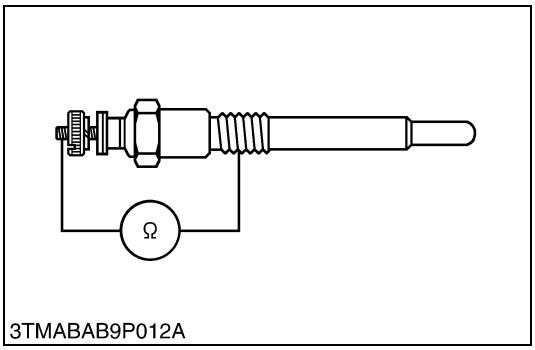

Glow Plug Continuity

1. Disconnect the lead from the glow plugs.
2. Measure the resistance with an ohmmeter between the glow plug terminal and the chassis.
3. If 0 ohm is indicated, the screw at the tip of the glow plug and the housing are short-circuited.
4. If the factory specification is not indicated, the glow plug is faulty.

Glow plug resistance	Factory spec.	Approx. 0.9 Ω

W10151150

(D) Safety Switch

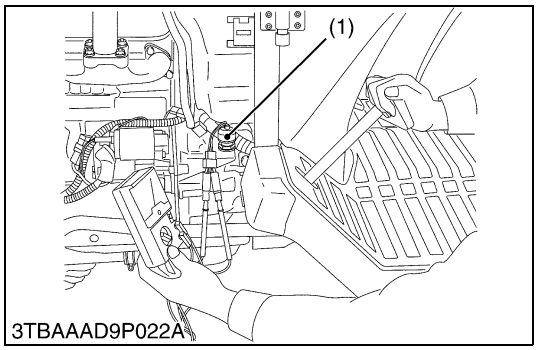

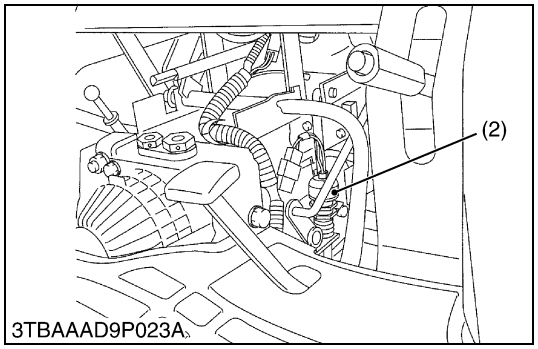

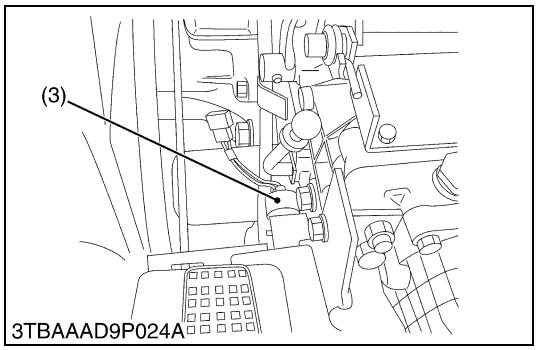

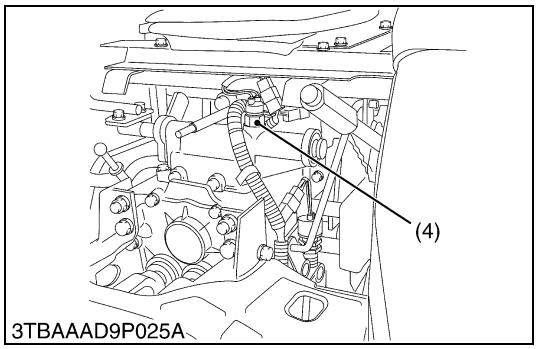

Safety Switch Continuity

1. Remove the safety switch leads.
2. Connect the circuit tester to the safety switch leads.
3. Measure the resistance between leads.
4. If the safety switch is defective, replace it.

Resistance (Across switch terminal)	When switch push is pushed	0 Ω
	When switch push is released	Infinity

(1) Safety Switch for Clutch Pedal
(2) Safety Switch for PTO Gear Shift Lever
(3) Safety Switch for HST
(4) Safety Switch for Main Gear Shift Lever

W10158610

(E) Engine Stop Solenoid

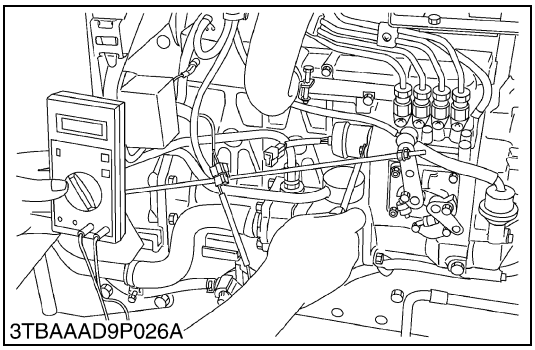

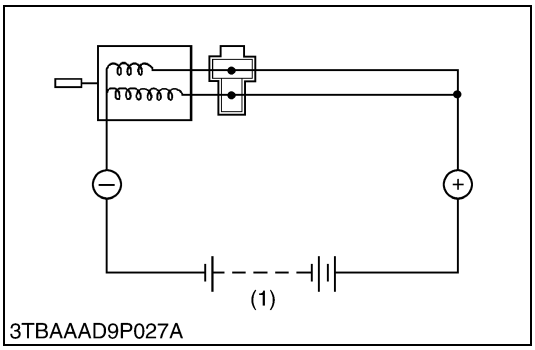

Lead Terminal Voltage

1. Disconnect the connector of engine stop solenoid.
2. Turn the main switch **"ON"**.
3. Measure the voltage with voltmeter across the terminal **1** and **2** (Red / Green and White) of the wiring harness side and the chassis.
4. If the battery voltage (11 to 14 V) is not indicated, the fuse, the main switch or wiring harness are faulty.

Voltage	Terminal **1** and **2** – chassis	Approx. battery voltage

W10163430

Engine Stop Solenoid Test

1. Disconnect the lead from the engine stop solenoid after turning the main switch off.
2. Connect jumper leads from the battery positive terminal to the engine stop solenoid terminal **1** (Red / Black) and **2** (White), then from the battery negative terminal to the engine stop solenoid body.
3. If the solenoid plunger is not attracted, the engine stop solenoid is faulty.

(1) Battery

W10165590

(2) Disassembling and Assembling

Starter

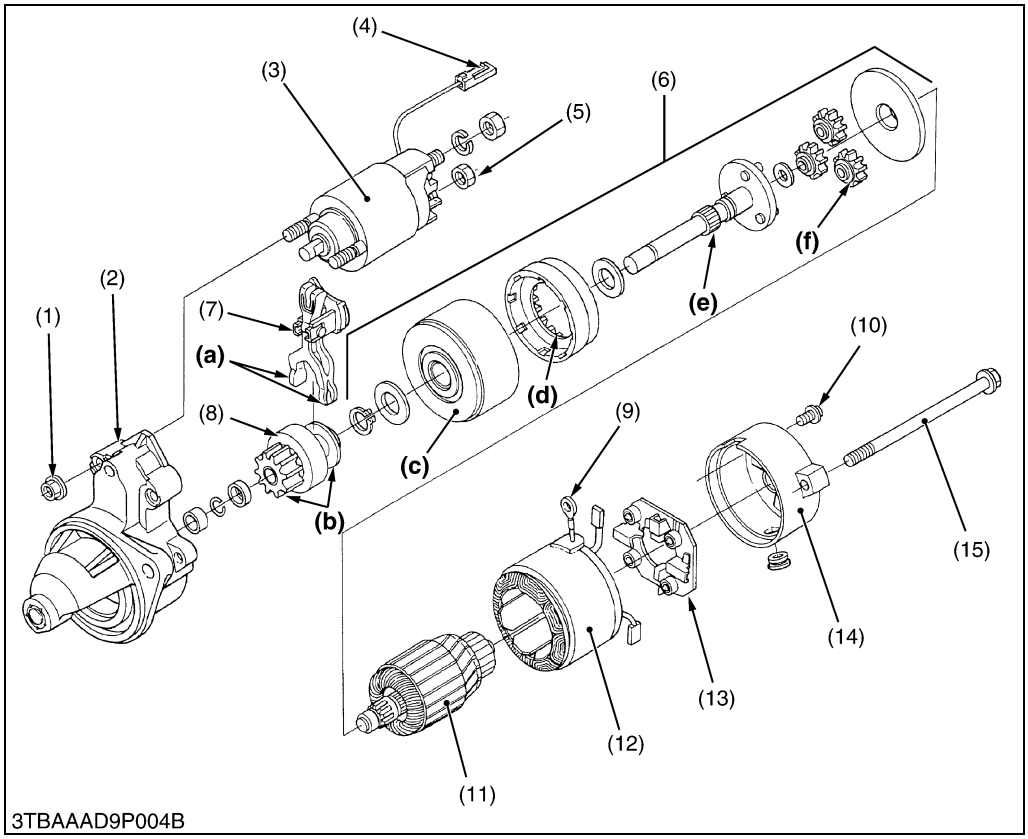

(1) Magnetic Switch Mounting Nut
(2) Housing
(3) Magnetic Switch
(4) Connecting Lead
(5) **C** Terminal Nut
(6) Shaft Assembly
(7) Drive Lever
(8) Overrunning Clutch
(9) Connecting Lead
(10) Mounting Screw
(11) Armature
(12) Yoke
(13) Brush Holder
(14) Rear End Frame
(15) Through bolt

W10168050

1. Unscrew the **C** terminal nut (5), and disconnect the connecting leads (4), (9).
2. Unscrew the magnetic switch mounting nuts (1), and remove the magnetic switch (3) from the housing (2).
3. Unscrew the through bolts (15) and mounting screws (10), and remove the rear end frame (14).
4. Remove the brush from the brush holder while holding the spring up.
5. Remove the brush holder (13).
6. Draw out the armature (11) and yoke (12) from the housing.
7. Draw out the shaft assembly (6) with the drive lever (7) and overrunning clutch (8) from the housing.

■ **NOTE**

- **Do not damage to the brush and commutator.**

(When reassembling)

- Apply grease (NIPPONDENSO No. 50 or equivalent) to the parts indicated in the figure.
  (a) Drive lever
  (b) Teeth of pinion gear
  (c) Center bearing
  (d) Internal gear
  (e) Shaft
  (f) Planetary Gear

Tightening torque	**C** terminal nut (5)	7.9 to 11.8 N·m 0.8 to 1.2 kgf·m 5.8 to 8.7 ft-lbs
	Magnetic switch mounting nut (1)	5.9 to 10.8 N·m 0.6 to 1.1 kgf·m 4.4 to 7.9 ft-lbs
	Through bolt (15)	4.42 to 7.35 N·m 0.45 to 0.75 kgf·m 3.26 to 5.42 ft-lbs

W10169850

(3) Servicing

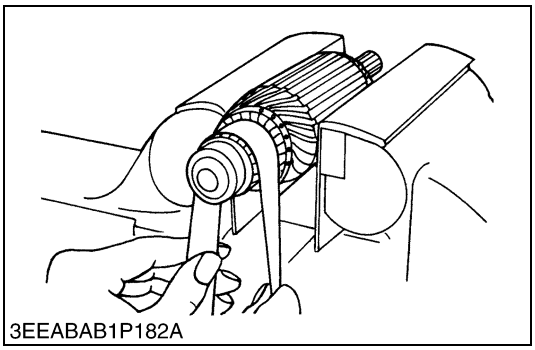
3EEABAB1P182A

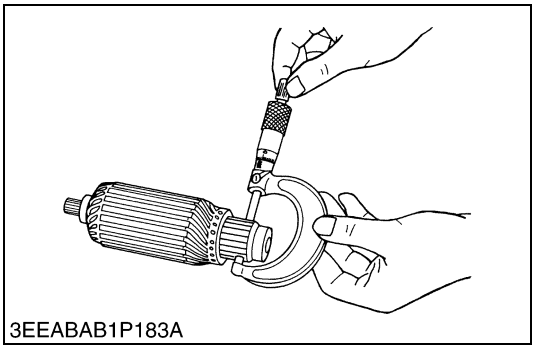
3EEABAB1P183A

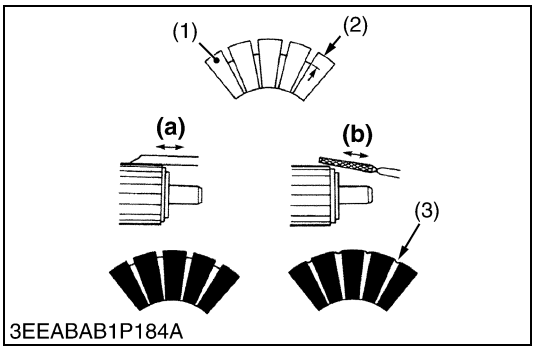

3EEABAB1P184A

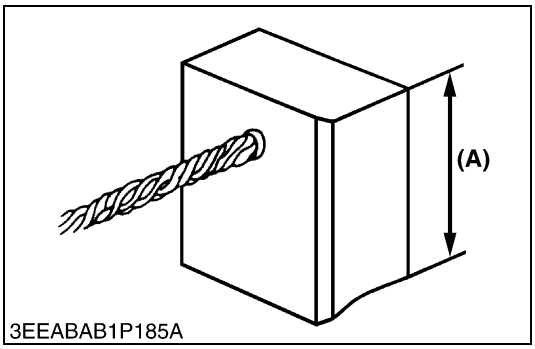

3EEABAB1P185A

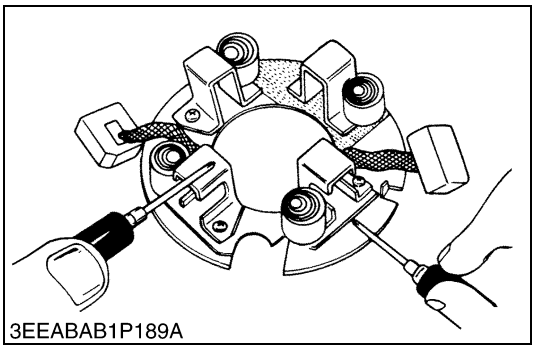
3EEABAB1P189A

Commutator and Mica

1. Check the contact face of the commutator for wear, and grind the commutator with emery paper if it is slightly worn.
2. Measure the commutator O.D. with an outside micrometer at several points.
3. If the minimum O.D. is less than the allowable limit, replace the armature.
4. If the difference of the O.D.'s exceeds the allowable limit, correct the commutator on a lathe to the factory specification.
5. Measure the mica undercut.
6. If the undercut is less than the allowable limit, correct it with a saw blade and chamfer the segment edges.

Commutator O.D.	Factory spec.	28.0 mm 1.102 in.
	Allowable limit	27.0 mm 1.063 in.

Difference of O.D.'s	Factory spec.	Less than 0.02 mm 0.0008 in.
	Allowable limit	0.05 mm 0.0020 in.

Mica undercut	Factory spec.	0.60 mm 0.0236 in.
	Allowable limit	0.20 mm 0.0079 in.

(1) Segment
(2) Undercut
(3) Mica

(a) Correct
(b) Incorrect

W10170920

Brush Wear

1. If the contact face of the brush is dirty or dusty, clean it with emery paper.
2. Measure the brush length (**A**) with vernier calipers.
3. If the length is less than the allowable limit, replace the yoke assembly and brush holder.

Brush length (**A**)	Factory spec.	14.0 mm 0.551 in.
	Allowable limit	9.0 mm 0.354 in.

W10175440

Brush Holder

1. Check the continuity across the brush holder and the holder support with an ohmmeter.
2. If it conducts, replace the brush holder.

Resistance	Brush holder – Holder support	Infinity

W10176720

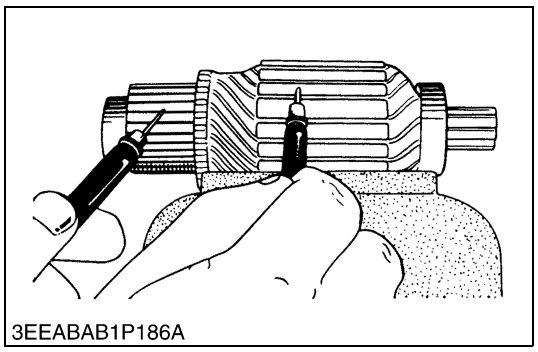
3EEABAB1P186A

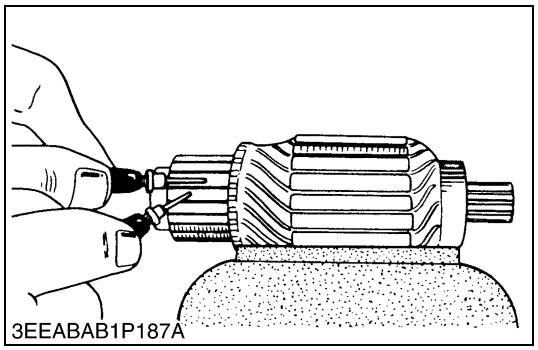
3EEABAB1P187A

Armature Coil

1. Check the continuity across the commutator and armature coil core with an ohmmeter.
2. If it conducts, replace the armature.
3. Check the continuity across the segments of the commutator with an ohmmeter.
4. If it does not conduct, replace the armature.

W10177670

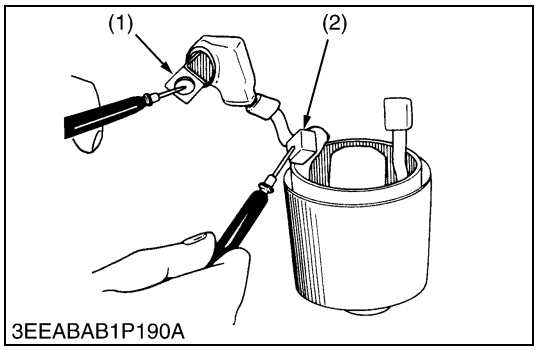

3EEABAB1P190A

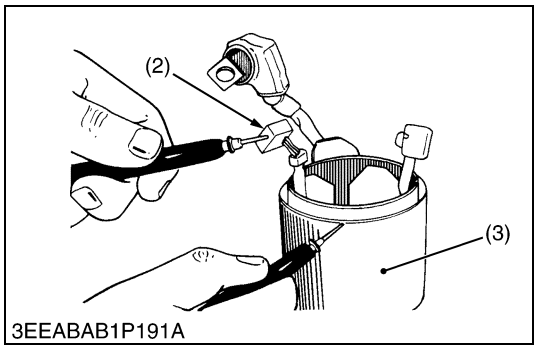

3EEABAB1P191A

Field Coil

1. Check the continuity across the lead (1) and brush (2) with an ohmmeter.
2. If it does not conduct, replace the yoke assembly.
3. Check the continuity across the brush (2) and yoke (3) with an ohmmeter.
4. If it conducts, replace the yoke assembly.

(1) Lead
(2) Brush
(3) Yoke

W10180150

[3] CHARGING SYSTEM

(1) Checking

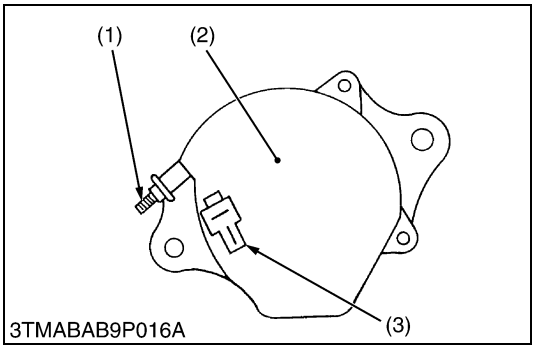

Alternator

1. Disconnect the **2P** connector (3) from alternator after turning the main switch **OFF**.
2. Perform the following checkings.

(1) **B** Terminal
(2) Alternator
(3) **2P** Connector

W10181750

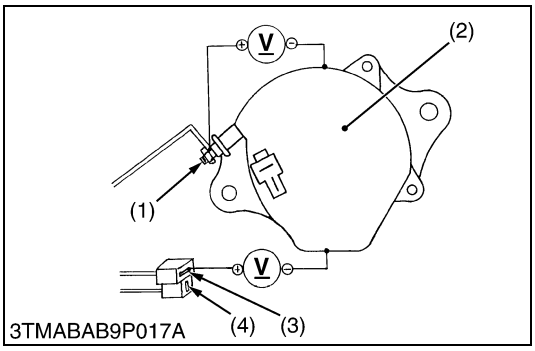

Connector Voltage

1. Turn the main switch **OFF**. Measure the voltage between the **B** terminal (1) and the chassis.
2. Turn the main switch **ON**. Measure the voltage between the **IG** terminal (3) and the chassis.

Voltage (Main switch at **OFF**)	**B** terminal – Chassis	Approx. battery voltage
Voltage (Main switch at **ON**)	**IG** terminal – Chassis	Approx. battery voltage

(1) **B** Terminal
(2) Alternator
(3) **IG** Terminal
(4) **L** Terminal

W10182790

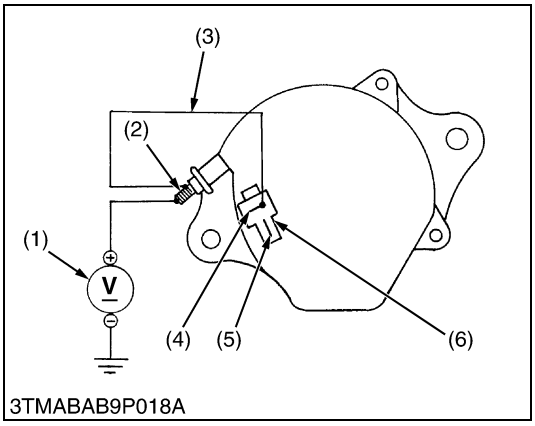

No-Load Test

1. Connect the **2P** connector (6) to previous positions of the alternator after turning the main switch **OFF**.
2. Connect the jumper lead (3) between **IG** terminal (4) and **B** terminal (2).
3. Start the engine and then set at idling speed.
4. Disconnect the negative cable from the battery.
5. Measure the voltage between the **B** terminal (2) and the chassis.
6. If the measurement is less than the factory specification, disassemble the alternator and check the IC regulator.

Voltage	Factory spec.	More than 14 V

(Reference)

- Once the engine has started, the alternator temperature rises quickly up to an ambient temperature of 70 to 90 °C (158 to 194 °F). As the temperature goes higher than 50 °C (122 °F), the alternator voltage slowly drops; at higher than 100 °C (212 °F), it drops by about 1 V.

(1) Voltmeter
(2) **B** Terminal
(3) Jumper Lead
(4) **IG** Terminal
(5) **L** Terminal
(6) **2P** Terminal

W10184780

(2) Disassembling and Assembling

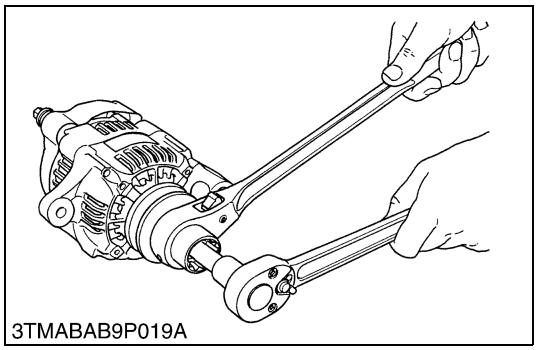
3TMABAB9P019A

Pulley

1. Secure the hexagonal end of the pulley shaft with a double-ended ratchet wrench as shown in the figure, loosen the pulley nut with a socket wrench and remove it.

(When reassembling)

Tightening torque	Pulley nut	58.3 to 78.9 N·m 5.95 to 8.05 kgf·m 43.0 to 58.2 ft-lbs

W10187280

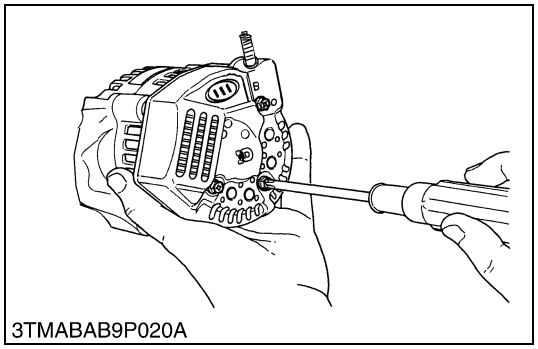
3TMABAB9P020A

Rear End Cover

1. Unscrew the three rear end cover screws and the **B** terminal nut, and remove the rear end cover.

W10189820

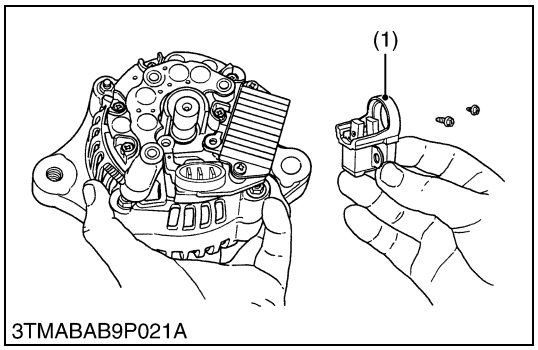

3TMABAB9P021A

Brush Holder

1. Unscrew the two screws holding the brush holder, and remove the brush holder (1).

(1) Brush Holder

W10190540

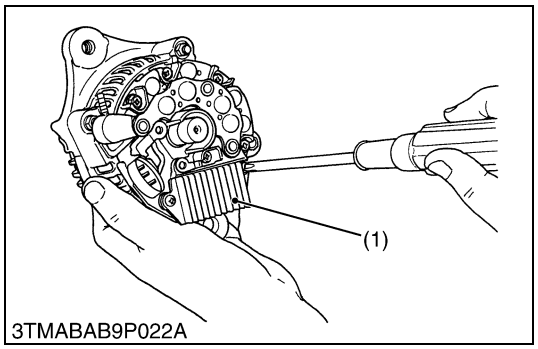

3TMABAB9P022A

IC Regulator

1. Unscrew the three screws holding the IC regulator, and remove the IC regulator (1).

(1) IC Regulator

W10191230

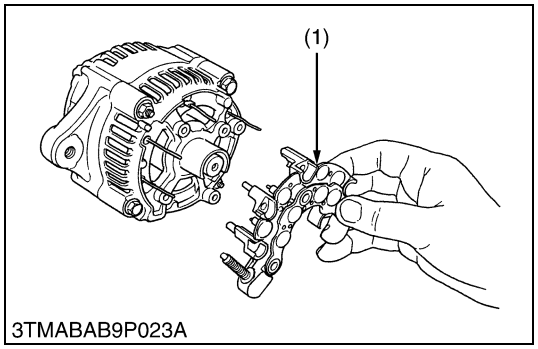

3TMABAB9P023A

Rectifier

1. Remove the four screws holding the rectifier and the stator lead wires.
2. Remove the rectifier (1).

(1) Rectifier

W10191920

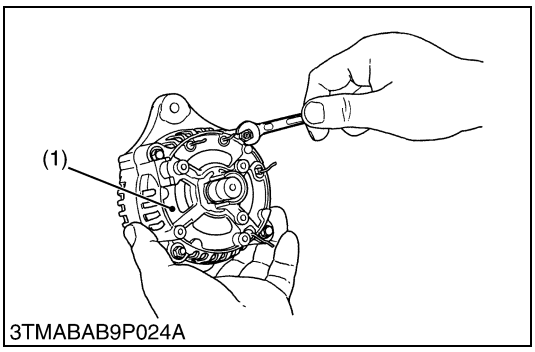

Rear End Frame

1. Unscrew the two nuts and two screws holding the drive end frame and the rear end frame.
2. Remove the rear end frame (1).

(1) Rear End Frame

W10192740

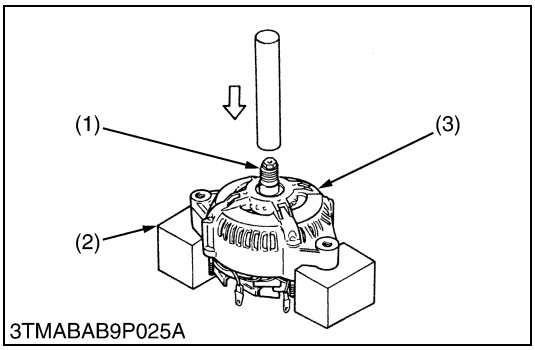

Rotor

1. Press out the rotor (1) from drive end frame (3).

■ **IMPORTANT**

- **Take special care not to drop the rotor and damage the slip ring or fan, etc..**

(1) Rotor
(2) Block
(3) Drive End Frame

W10194380

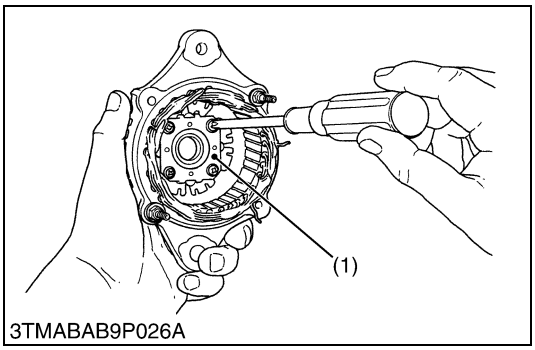

Retainer Plate

1. Unscrew the four screws holding the retainer plate, and remove the retainer plate (1).

(1) Retainer Plate

W10195420

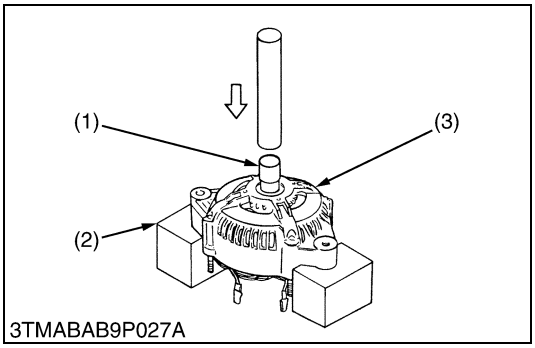

Bearing on Drive End Side

1. Press out the bearing from drive end frame (3) with a press and jig (1).

(1) Jig
(2) Block
(3) Drive End Frame

W10196110

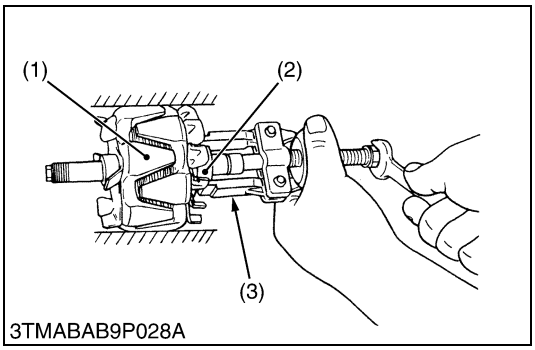

Bearing at Slip Ring Side

1. Lightly secure the rotor (1) with a vise to prevent damage, and remove the bearing (2) with a puller (3).

(1) Rotor
(2) Bearing
(3) Puller

W10197010

(3) Servicing

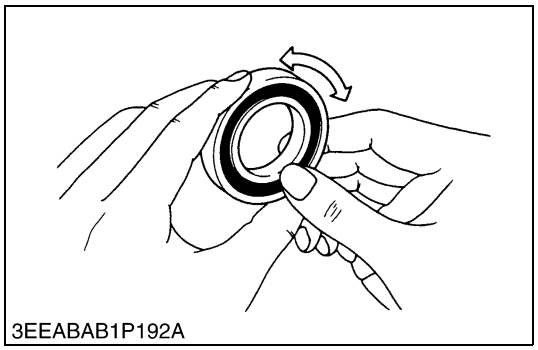
3EEABAB1P192A

Bearing

1. Check the bearing for smooth rotation.
2. If it does not rotate smoothly, replace it.

W10197900

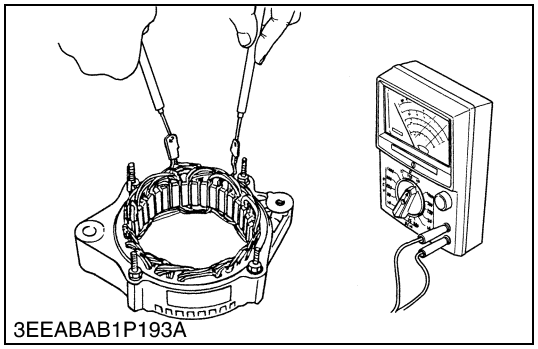
3EEABAB1P193A

Stator

1. Measure the resistance across each lead of the stator coil with an ohmmeter.
2. If the measurement is not within the factory specification, replace it.
3. Check the continuity across each stator coil lead and core with an ohmmeter.
4. If infinity is not indicated, replace it.

Resistance	Factory spec.	Less than 1.0 Ω

W10199640

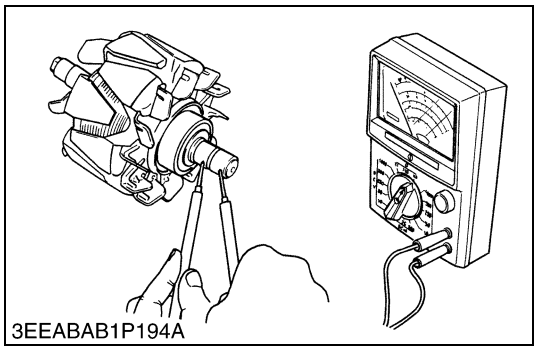
3EEABAB1P194A

Rotor

1. Measure the resistance across the slip rings with an ohmmeter.
2. If the resistance is not the factory specification, replace it.
3. Check the continuity across the slip ring and core with an ohmmeter.
4. If infinity is not indicated, replace it.

Resistance	Factory spec.	2.9 Ω

W10200940

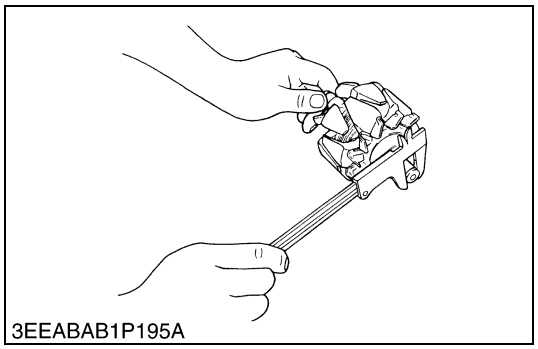
3EEABAB1P195A

Slip Ring

1. Check the slip ring for score.
2. If scored, correct with an emery paper or on a lathe.
3. Measure the O.D. of slip ring with vernier calipers.
4. If the measurement is less than the allowable limit, replace it.

Slip ring O.D.	Factory spec.	14.4 mm 0.567 in.
	Allowable limit	12.8 mm 0.504 in.

W10202080

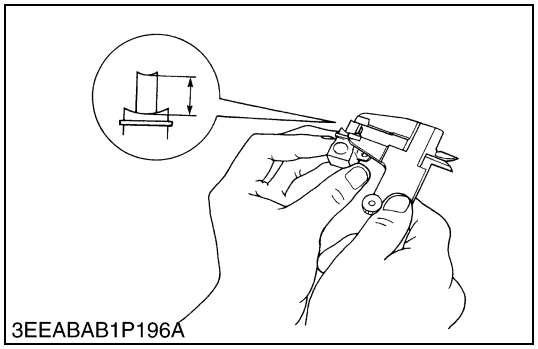
3EEABAB1P196A

Brush Wear

1. Measure the brush length with vernier calipers.
2. If the measurement is less than allowable limit, replace it.
3. Make sure that the brush moves smoothly.
4. If the brush is defective, replace it.

Brush length	Factory spec.	10.5 mm 0.413 in.
	Allowable limit	8.4 mm 0.331 in.

W10203290

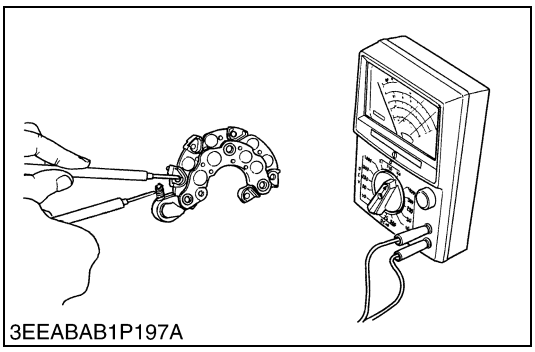
3EEABAB1P197A

Rectifier

1. Check the continuity across each diode of rectifier with an analog ohmmeter. Conduct the test in the (R × 1) setting.
2. The rectifier is normal if the diode in the rectifier conducts in one direction and does not conduct in the reverse direction.

■ **IMPORTANT**

- **Do not use a 500 V megger for measuring because it will destroy the rectifier.**

■ **NOTE**

- **Do not use an auto digital multimeter. Because it's very hard to check the continuity of rectifier by using it.**

W10204520

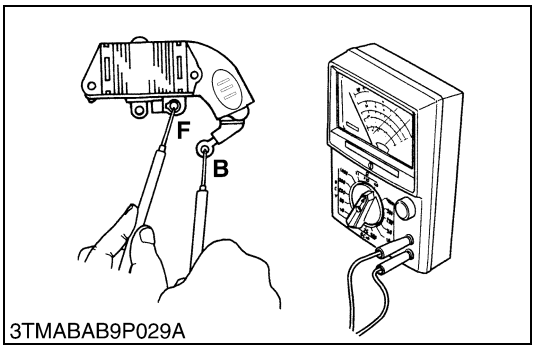

3TMABAB9P029A

IC Regulator

1. Check the continuity across the **B** terminal and the **F** terminal of IC regulator with an analog ohmmeter. Conduct the test in the (R × 1) setting.
2. The IC regulator is normal if the IC regulator conducts in one direction and does not conduct in the reverse direction.

■ **IMPORTANT**

- **Do not use a 500 V megger for measuring because it will destroy the IC regulator.**

■ **NOTE**

- **Do not use an auto digital multimeter. Because it's very hard to check the continuity of IC regulator by using it.**

W10206450

[4] LIGHTING SYSTEM

(1) Checking

(A) Combination Switch

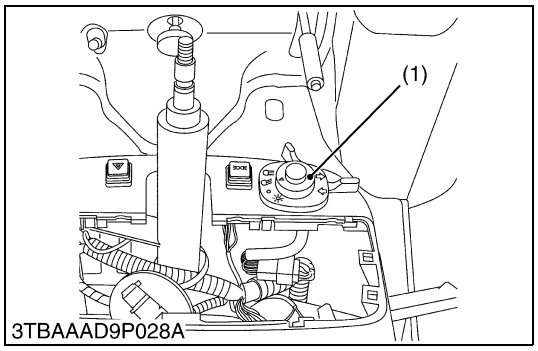

Combination Switch Connector Voltage

1. Remove the under panel, and disconnect the combination switch connector.
2. Turn the main switch on, and measure the voltage with a voltmeter across the connector **B1** terminal and the chassis.
3. If the voltage differs from the battery voltage, the wiring harness or main switch is faulty.

Voltage	**B1** – Chassis	Approx. battery voltage

(1) Combination Switch

W10198270

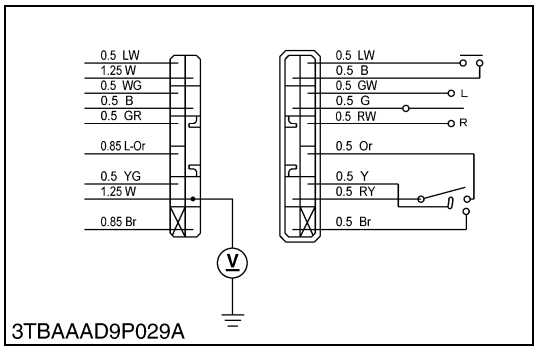

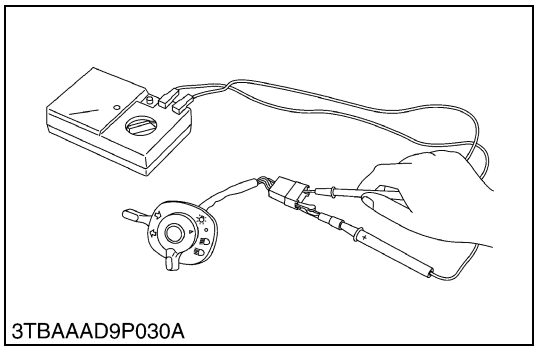

Combination Switch Continuity

1. Remove the under panel, and disconnect the combination switch connector.
2. Remove the combination switch and perform the following checkings.

W10199670

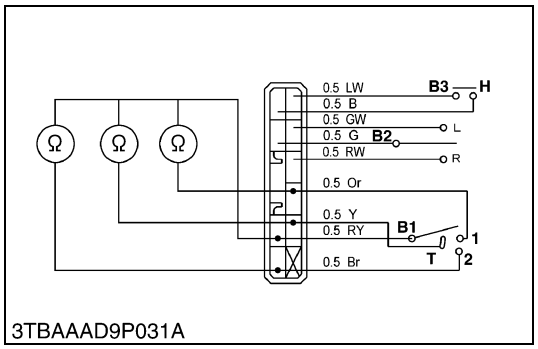

1) Head Light Switch Continuity when Setting Switch Knob at OFF Position

1. Set the light switch knob to the **OFF** position.
2. Measure the resistance with an ohmmeter across the **B1** terminal to the **1** terminal, and across the **B1** terminal and the **T** terminal, and across the **B1** terminal and **2** terminal.
3. If infinity is not indicated, the combination switch is faulty.

Resistance (Switch knob at **OFF** position)	**B1** terminal – **1** terminal	Infinity
	B1 terminal – **T** terminal	
	B1 terminal – **2** terminal	

W10200330

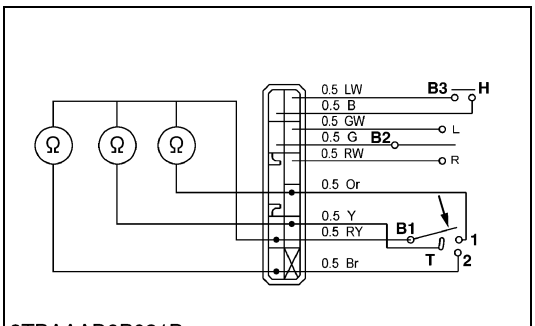

3TBAAAD9P031B

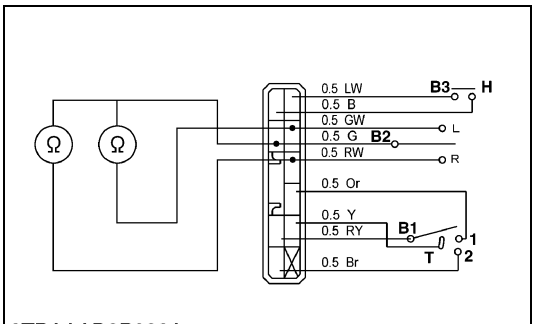

3TBAAAD9P032A

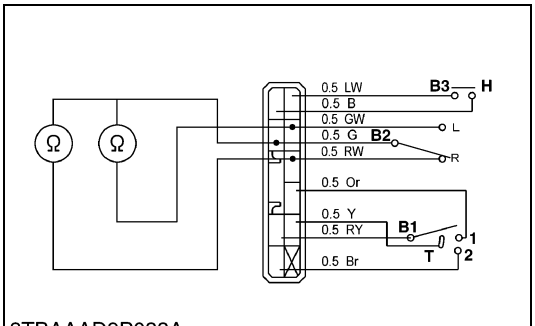

3TBAAAD9P033A

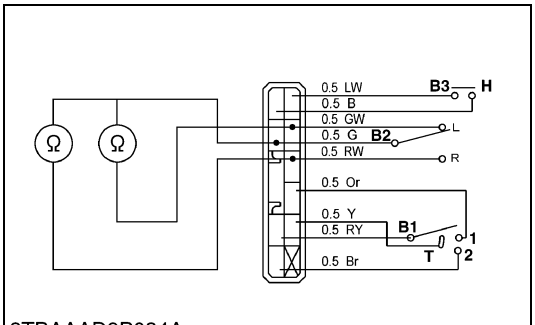

3TBAAAD9P034A

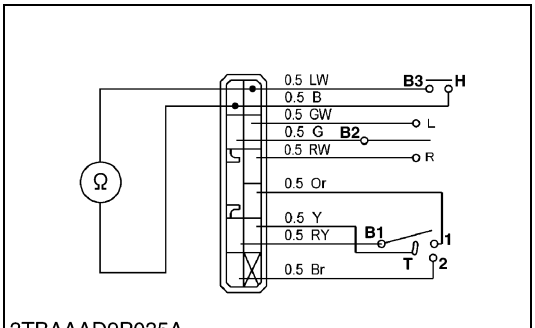

3TBAAAD9P035A

2) Head Light Switch Continuity when Setting Switch Knob at LOW-BEAM and HIGH-BEAM Position

1. Measure the resistance with an ohmmeter across the **B1** terminal and **1** terminal, and across the **B1** terminal and **T** terminal, and across the **B1** terminal and **2** terminal.
2. If 0 ohm is not indicated, the combination switch is faulty.

Resistance (Switch knob at **LOW-BEAM** and **HIGH-BEAM** position)	**B1** terminal – **1** terminal	0 Ω
	B1 terminal – **T** terminal	
	B1 terminal – **2** terminal	

W10202920

3) Turn Signal Light Switch Continuity when Setting Switch Knob at OFF Position

1. Set the turn signal light switch knob to the **OFF** position.
2. Measure the resistances with an ohmmeter across the **B2** terminal and **L** terminal, and across **B2** terminal and **R** terminal.
3. If infinity is not indicated, the combination switch is faulty.

Resistance (Switch knob at **OFF** position)	**B2** terminal – **L** terminal	Infinity
	B2 terminal – **R** terminal	

W10205940

4) Turn Signal Light Switch Continuity when Setting Switch Knob at R Position

1. Set the turn signal light switch knob to the **R** position.
2. Measure the resistance with an ohmmeter across the **B2** terminal and **R** terminal.
3. If 0 ohm is not indicated, the combination switch is faulty.

Resistance (Switch knob at **R** position)	**B2** terminal – **R** terminal	0 Ω
	B2 terminal – **L** terminal	Infinity

W10209280

5) Turn Signal Light Switch Continuity when Setting Switch Knob at L Position

1. Set the turn signal light switch knob to the **L** position.
2. Measure the resistance with an ohmmeter across the **B2** terminal and **L** terminal.
3. If 0 ohm is not indicated, the combination switch is faulty.

Resistance (Switch knob at **L** position)	**B2** terminal – **L** terminal	0 Ω
	B2 terminal – **R** terminal	Infinity

W10211120

6) Horn Switch Continuity

1. Press the horn button and measure the resistance with an ohmmeter across the **B3** terminal and **H** terminal.
2. If 0 ohm is not indicated, the combination switch is faulty.

Resistance	**B3** terminal – **H** terminal	0 Ω

W10212790

(B) Hazard Light Switch

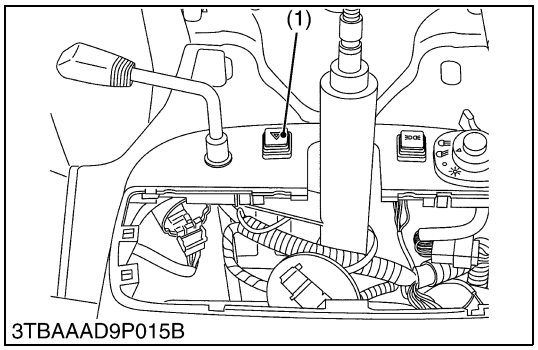

3TBAAAD9P015B

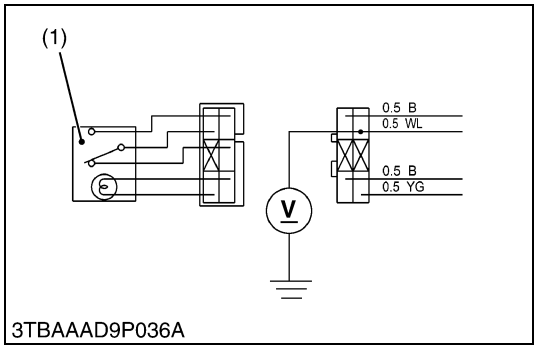

3TBAAAD9P036A

Hazard Light Switch Connector Voltage

1. Remove the meter panel, and disconnect the connector from hazard light switch.
2. Measure the voltage with a voltmeter across the **WL** terminal and chassis.
3. If the voltage differs from the battery voltage, the wiring harness is faulty.

Voltage	**WL** terminal – Chassis	Approx. battery voltage

(1) Hazard Light Switch

W10228910

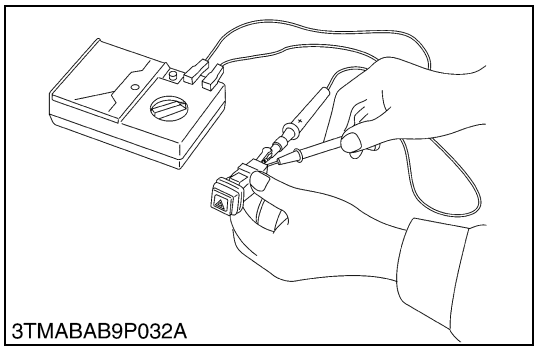
3TMABAB9P032A

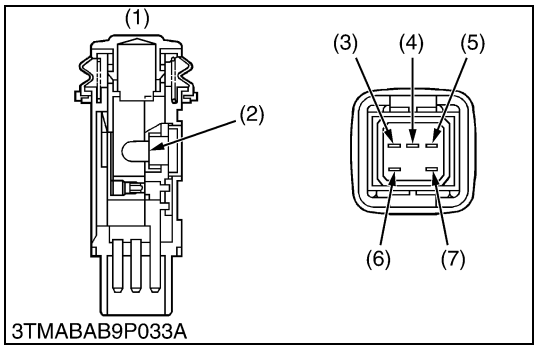

3TMABAB9P033A

Hazard Light Switch Continuity

1. Remove the meter panel.
2. Disconnect the connector, and remove the hazard light switch.
3. Measure the resistance with ohmmeter across the **A** terminal and **C** terminal, and across the **D** terminal and **E** terminal.
4. If the measurement differs from the table below, the hazard light switch or the bulb are faulty.

Resistance (Switch at **OFF**)	**A** terminal – **C** terminal	Infinity
Resistance (Switch at **ON**)	**A** terminal – **C** terminal	0 Ω
Resistance (Bulb)	**D** terminal – **E** terminal	Approx. 13 Ω

(1) Hazard Light Switch
(2) Bulb
(3) **A** Terminal
(4) **B** Terminal
(5) **D** Terminal
(6) **C** Terminal
(7) **E** Terminal

W10230230

(C) Position (Parking) Light Switch

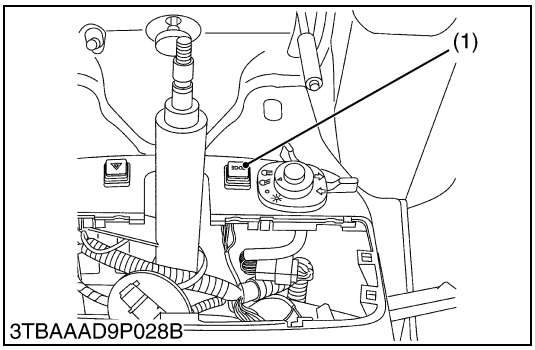

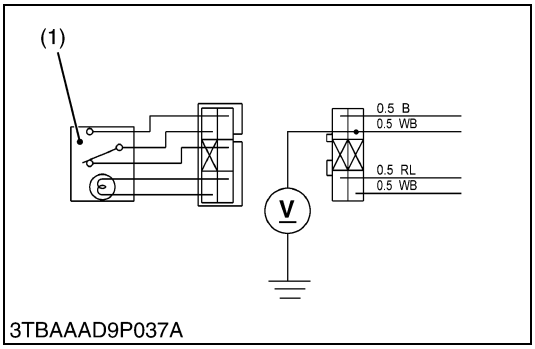

Position (Parking) Light Switch Connector Voltage

1. Remove the meter panel, and disconnect the connector from position light switch.
2. Measure the voltage with a voltmeter across the **WB** terminal and chassis.
3. If the voltage differs from the battery voltage, the wiring harness is faulty.

Voltage	**WB** terminal – Chassis	Approx. battery voltage

(1) Position Light Switch

W10236100

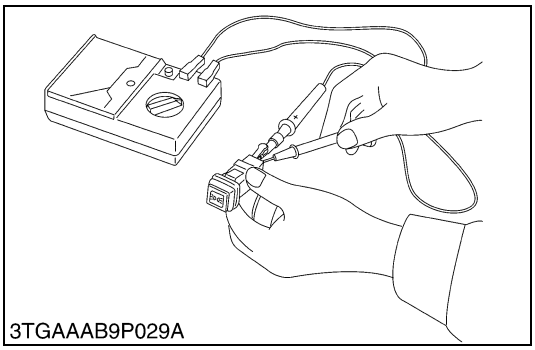

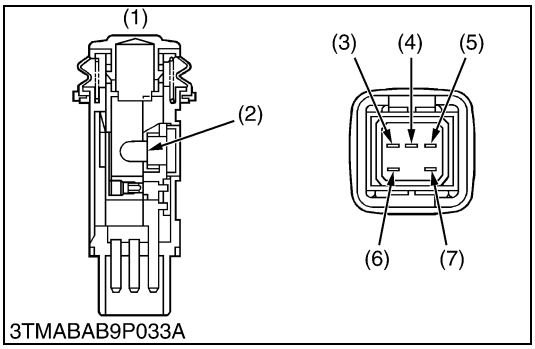

Position (Parking) Light Switch Continuity

1. Remove the meter panel.
2. Disconnect the connector, and remove the position light switch.
3. Measure the resistance with ohmmeter across the **A** terminal and **C** terminal, and across the **D** terminal and **E** terminal.
4. If the measurement differs from the table below, the position light switch or the bulb are faulty.

Resistance (Switch at **OFF**)	**A** terminal – **C** terminal	Infinity
Resistance (Switch at **ON**)	**A** terminal – **C** terminal	0 Ω
Resistance (Bulb)	**D** terminal – **E** terminal	Approx. 13 Ω

(1) Position Light Switch
(2) Bulb
(3) **A** Terminal
(4) **B** Terminal
(5) **D** Terminal
(6) **C** Terminal
(7) **E** Terminal

W10237690

(D) Flasher / Hazard Unit

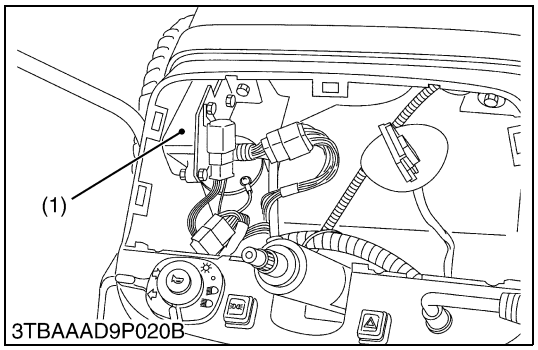

3TBAAAD9P020B

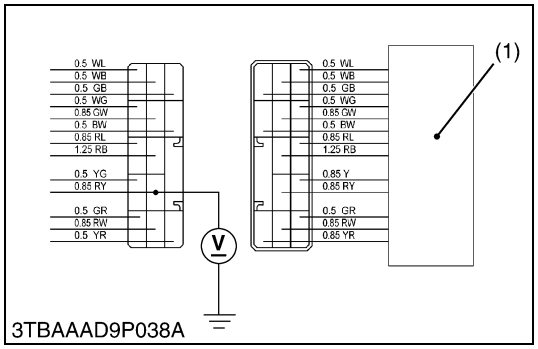

3TBAAAD9P038A

Flasher / Hazard Unit Connector Voltage

1. Remove the meter panel, and disconnect the connector from flasher / hazard unit.
2. Measure the voltage with a voltmeter across the **RY** terminal and chassis.
3. If the voltage differs from the battery voltage, the wiring harness is faulty.

Voltage	**RY** terminal – Chassis	Approx. battery voltage

(1) Flasher / Hazard Unit

W10233540

(E) Brake Light Switch

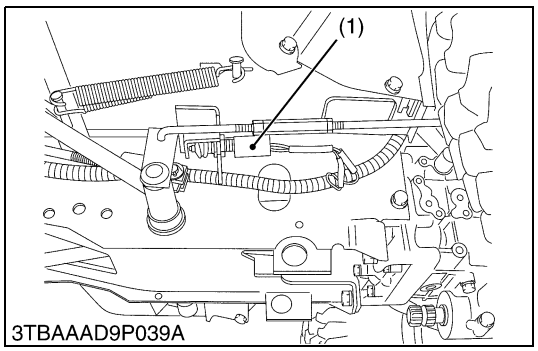

3TBAAAD9P039A

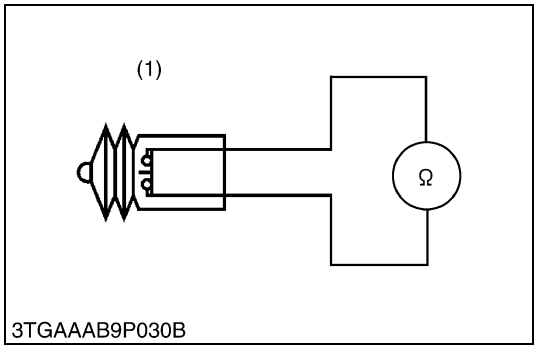

3TGAAAB9P030B

Brake Light Switch Continuity

1. Disconnect the leads, and measure the resistance with an ohmmeter across the brake light switch leads.
2. If the measurement differs from the table below, the brake light switch is faulty or need to adjust the brake light switch position.

Resistance (When brake pedal is depressed)	Lead – Lead	Infinity
Resistance (When brake pedal is released)	Lead – Lead	0 Ω

(1) Brake Light Switch

W10241630

(F) Easy Checker

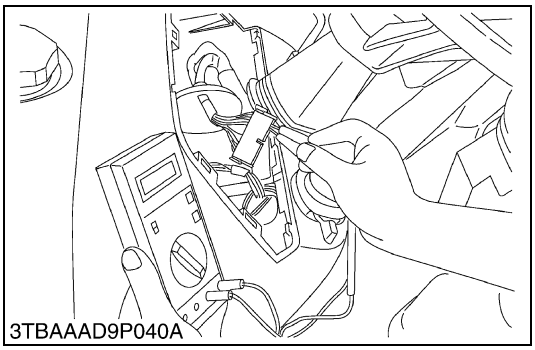
3TBAAAD9P040A

Easy Checker

1. Remove the panel board and disconnect the connector from it.
2. Turn the main switch **ON**.
3. Measure the voltage with a voltmeter across the terminal (Red / Yellow) and the earth terminal (Black).
4. If the voltage differs from the battery voltage, the wiring harness, fuses and main switch should be checked.

W10227690

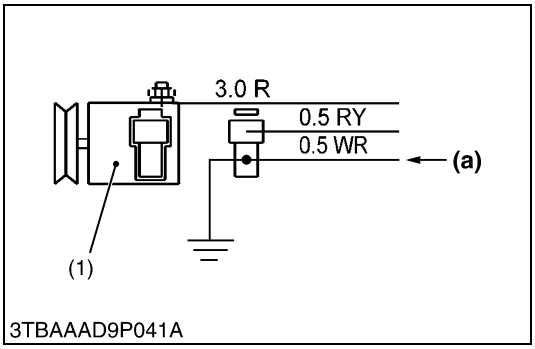

3TBAAAD9P041A

Charging Circuit (Panel Board and Wiring Harness)

1. Disconnect the **2P** connector from the alternator after turning the main switch **OFF**.
2. Turn the main switch on and connect a jumper lead from the wiring harness connector terminal (White / Red) to the chassis.
3. If the charge lamp does not light, the panel board circuit, alternator, wiring harness or fuse is fault.

(1) Alternator **(a) From Charge Lamp**

W10230010

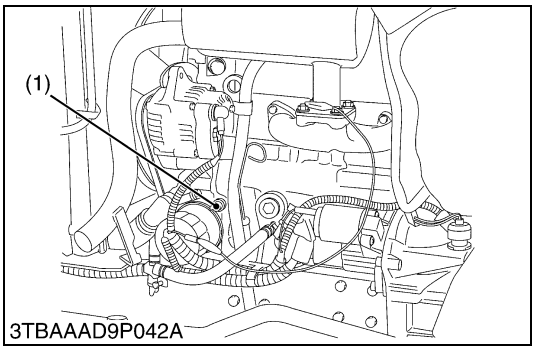

3TBAAAD9P042A

Engine Oil Pressure Switch (Panel Board and Wiring Harness)

1. Disconnect the lead from the engine oil pressure switch after turning the main switch **OFF**.
2. Turn the main switch **ON** and connect a jumper lead from the lead to the chassis.
3. If the engine oil pressure indicator lamp does not light, the panel board circuit or the wiring harness is faulty.

(1) Engine Oil Pressure Switch **(a) From Engine Oil Pressure Lamp**

W10231160

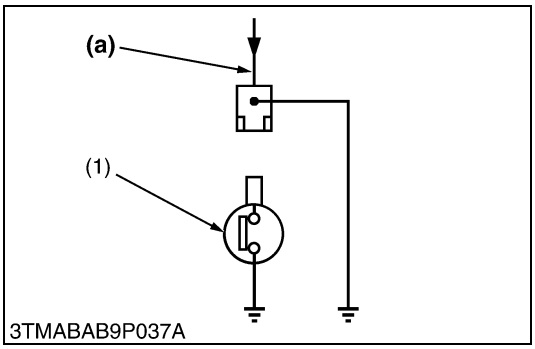

3TMABAB9P037A

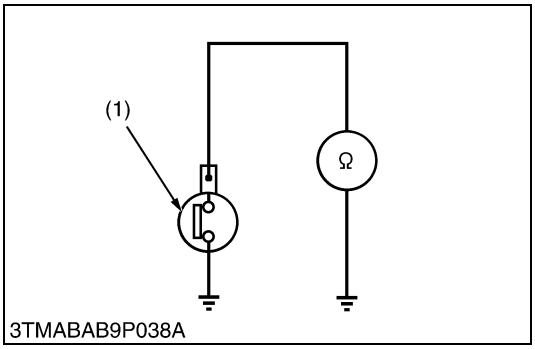

3TMABAB9P038A

Engine oil Pressure Switch Continuity

1. Measure the resistance with an ohmmeter across the switch terminal and the chassis.
2. If 0 ohm is not indicated in the normal state, the switch is faulty.
3. If infinity is not indicated at pressure over 4.9 kPa (0.5 kgf/cm^2, 7 psi), the switch is faulty.

Resistance (Switch terminal – Chassis)	In normal state	0 Ω
	At pressure over approx. 4.9 kPa (0.5 kgf/cm^2, 7 psi)	Infinity

(1) Engine Oil Pressure Switch

W10260840

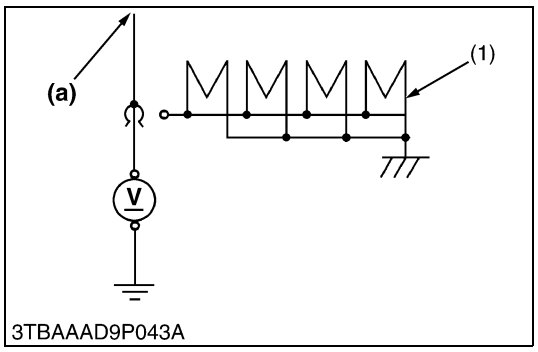

Glow Plug

1. Disconnect the lead from the glow plug.
2. Connect the tester positive cable to the glow plug lead and negative one to the chassis.
3. Measure its voltage with a voltmeter, after turning the main switch to the preheating or starting position.
4. If its voltage is not approximately the battery one, check the main switch or wiring harness.

(1) Glow Plug
(a) From Main Switch 19 Terminal and Pre-heat Indicator Lamp

W10233660

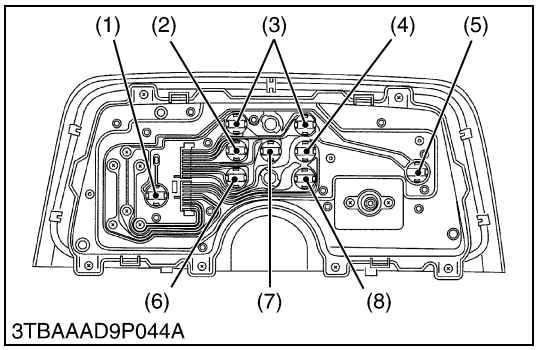

Monitor Lamp (for Charge, Engine Oil Pressure, Pre-heat, Illumination and Hazard)

1. After removing the panel board from tractor, remove the plate behind the panel.
2. Remove the each lamp.
3. Measure the lamp resistance.
4. If it is infinity, replace the lamp with new.

Lamp spec.	All lamp	12 V, 1.7 W

(1) Illumination
(2) Engine Oil Pressure
(3) Hazard / Turn Signal Indicator
(4) Pre-heat Indicator
(5) Illumination
(6) Trailer Indicator
(7) Charge
(8) Hi-beam Indicator

W10235630

(G) Trailer Socket

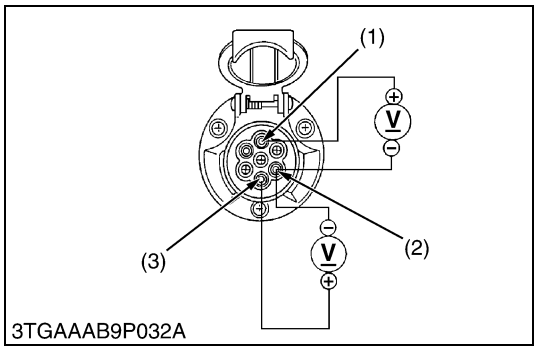

Turn Signal Light Terminals

1. Turn the main switch **ON**, and measure the voltage with voltmeter across the **1** terminal (1) and **3** terminal (2), and across the **4** terminal (3) and **3** terminal (2).
2. If the voltage differs from the battery voltage, the wiring harness or turn signal light switch are faulty.

Voltage (Turn signal light switch at **L** or hazard light switch at **ON**)	**1** terminal (Green / White) – **3** terminal (Black)	Approx. battery voltage (Intermittently)
Voltage (Turn signal light switch at **R** or hazard light switch at **ON**)	**4** terminal (Red / White) – **3** terminal (Black)	Approx. battery voltage (Intermittently)

(1) **1** Terminal
(2) **3** Terminal
(3) **4** Terminal

W10253400

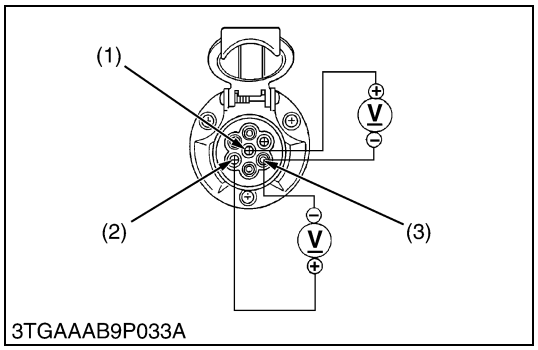

Tail Light Terminals

1. Turn the main switch **ON**, and measure the voltage with voltmeter across the **7** terminal (1) and **5** terminal (2), and across the **5** terminal (2) and **3** terminal (3).
2. If the voltage differs from battery voltage, the wiring harness or switches for tail lights are faulty.

Voltage (Head light switch at **ON** or position light switch at **ON**)	**7** terminal (Yellow / White) – **5** terminal (Yellow / Red)	Approx. battery voltage
Voltage (Head light switch at **ON** or position light switch at **ON**)	**5** terminal (Yellow / Red) – **3** terminal (Black)	Approx. battery voltage

(1) **7** Terminal
(2) **5** Terminal
(3) **3** Terminal

W10256600

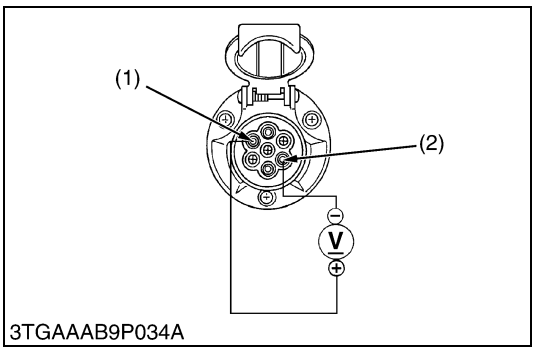

3TGAAAB9P034A

Brake Light Terminal

1. Turn the main switch **ON**, and measure the voltage with voltmeter across the **6** terminal (1) and **3** terminal (2).
2. If the voltage differs from battery voltage, the wiring harness or brake light switch are faulty.

Voltage (When stepping the brake pedal)	**6** terminal (Yellow) – **3** terminal (Black)	Approx. battery voltage

(1) **6** Terminal (2) **3** Terminal

W10260400

[5] GAUGES

(1) Checking

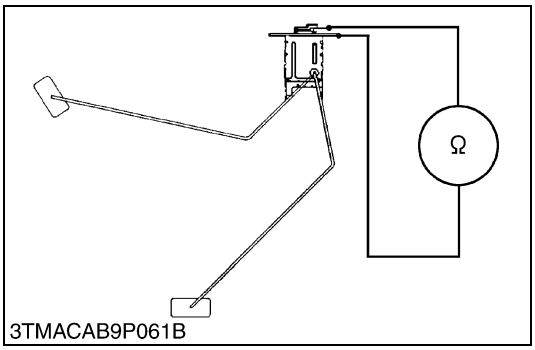

3TMACAB9P061B

Fuel Level Sensor

1) Sensor Continuity

1. Remove the fuel level sensor from the fuel tank.
2. Measure the resistance with an ohmmeter across the sensor terminal and its body.
3. If the reference value are not indicated, the sensor is faulty.

Resistance (Sensor terminal – its body)	Reference value	Float at upper-most position	1 to 5 Ω
		Float at lower-most position	103 to 117 Ω

W10248650

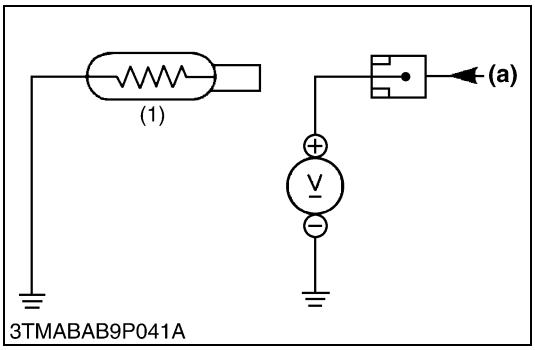

3TMABAB9P041A

Coolant Temperature Sensor

1) Lead Terminal Voltage

1. Disconnect the lead from the coolant temperature sensor after turning the main switch **OFF**.
2. Turn the main switch **ON** and measure the voltage with a voltmeter across the lead terminal and the chassis.
   If the voltage differs from the battery voltage, the wiring harness, fuse or coolant temperature gauge is faulty.

Voltage	Lead terminal – Chassis	Approx. battery voltage

2) Sensor Continuity

1. Measure the resistances with an ohmmeter across the sensor terminal and the chassis.
2. If the reference value is not indicated, the sensor is faulty.

Resistance (Sensor terminal – Chassis)	Reference value	Approx. 12.2 Ω at 130 °C (266 °F) Approx. 23.6 Ω at 105 °C (221 °F) Approx. 51.9 Ω at 80 °C (176 °F) Approx. 153.9 Ω at 50 °C (122 °F)

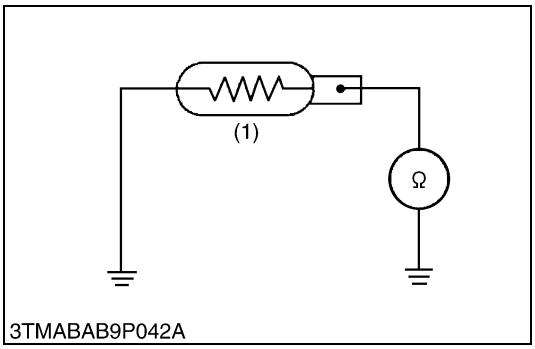

3TMABAB9P042A

(1) Coolant Temperature Sensor **(a) From Temperature Gauge**

W10251040

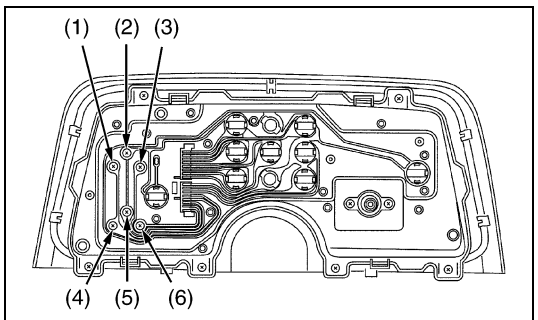

3TBAAAD9P044B

Fuel Gauge and Coolant Temperature Gauge Continuity

1. Remove the panel board from the tractor.
2. Check the continuity with an ohmmeter across the **U** terminal (2) and **IGN** terminal (3) and across the **U** terminal (2) and **GND** terminal (1).
3. If infinity is indicated, the coolant temperature gauge is faulty.
4. Check the continuity with an ohmmeter across the **U** terminal (5) and **IGN** terminal (6) and across the **U** terminal (5) and **GND** terminal (4).
5. If infinity is indicated, the fuel gauge is faulty.

(1) **GND** Terminal (Temperature)
(2) **U** Terminal (Temperature)
(3) **IGN** Terminal (Temperature)
(4) **GND** Terminal (Fuel)
(5) **U** Terminal (Fuel)
(6) **IGN** Terminal (Fuel)

W10272050

EDITOR:
KUBOTA FARM & INDUSTRIAL MACHINERY SERVICE, LTD.
64, ISHIZU-KITAMACHI, SAKAI-KU, SAKAI-CITY, OSAKA, 590-0823, JAPAN
PHONE : (81)72-241-1129
FAX : (81)72-245-2484
E-mail : ksos-pub@kubota.co.jp

KUBOTA Corporation

Printed in Japan 2006. 11, S, EI, EI, e Code No.9Y011-12751
2001. 02, S, EI, EI, e